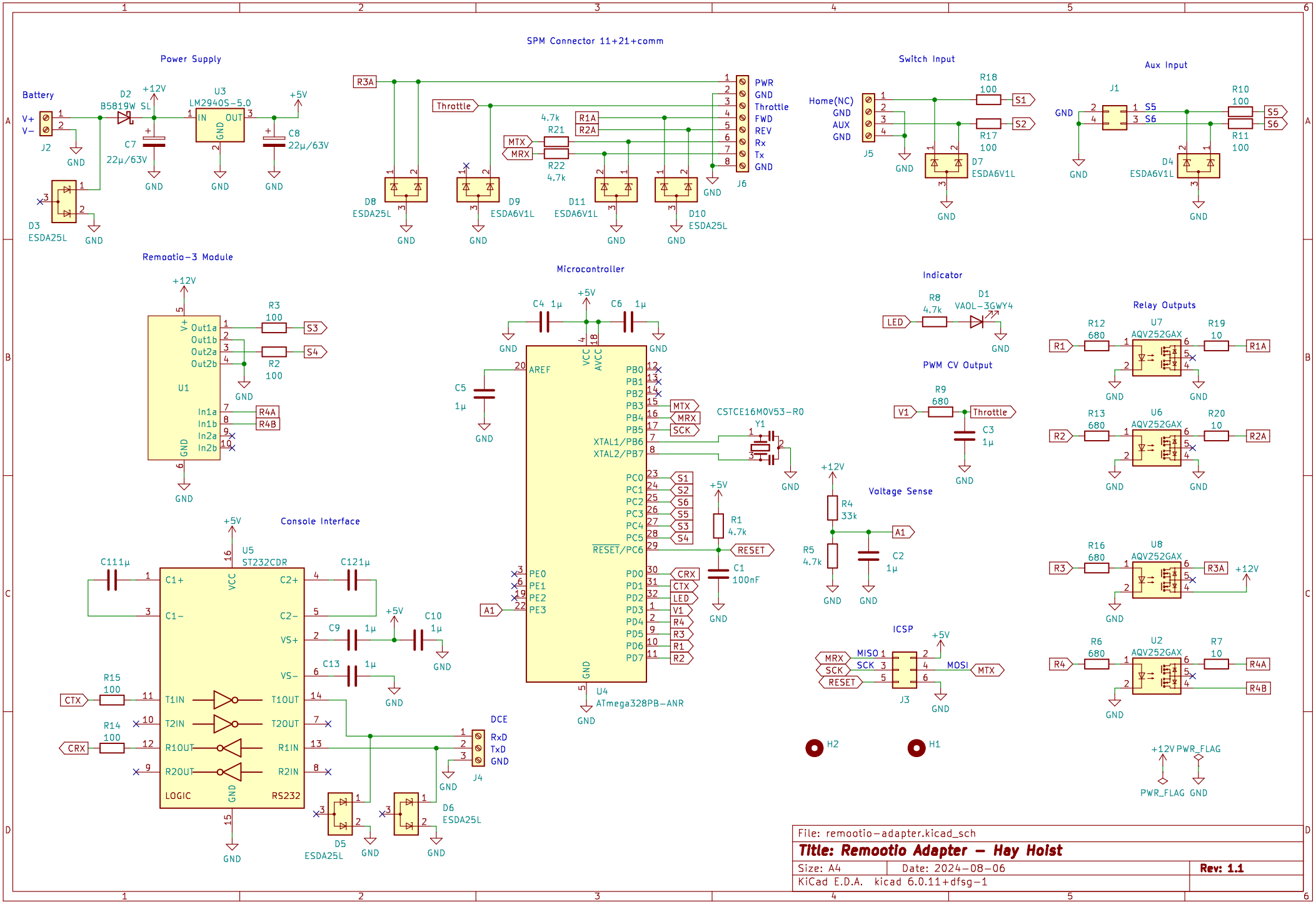
Power Supply
Battery
V+
V−
J2
D2
B5819W
SL
+12V
C7
22µ/63V
U3
LM2940S-5.0
IN
OUT
GND
+5V
C8
22µ/63V
D3
ESDA25L
SPM Connector 11+21+comm
R3A
Throttle
MTX
MRX
4.7k
R21
R22
4.7k
R1A
R2A
PWR
GND
Throttle
FWD
REV
Rx
Tx
GND
J6
D8
ESDA25L
D9
ESDA6V1L
D11
ESDA6V1L
D10
ESDA25L
Switch Input
Home(NC)
GND
AUX
GND
J5
R18
100
R17
100
S1
S2
D7
ESDA6V1L
Aux Input
J1
GND
S5
S6
R10
100
R11
100
D4
ESDA6V1L
Remootio-3 Module
+12V
U1
V+
Out1a
Out1b
Out2a
Out2b
In1a
In1b
In2a
In2b
R3
100
R2
100
S3
S4
R4A
R4B
Microcontroller
+5V
C4 1µ
C6 1µ
C5
1µ
AREF
VCC
AVCC
PB0
PB1
PB2
PB3
PB4
PB5
XTAL1/PB6
XTAL2/PB7
PC0
PC1
PC2
PC3
PC4
PC5
RESET/PC6
PD0
PD1
PD2
PD3
PD4
PD5
PD6
PD7
PE0
PE1
PE2
PE3
MTX
MRX
SCK
CSTCE16M0V53-R0
Y1
S1
S2
S6
S5
S3
S4
R1
4.7k
RESET
C1
100nF
CRX
CTX
LED
V1
R4
R3
R1
R2
A1
U4
ATmega328PB-ANR
Indicator
LED
R8
4.7k
D1
VAOL-3GWY4
PWM CV Output
V1
R9
680
Throttle
C3
1µ
Voltage Sense
+12V
R4
33k
R5
4.7k
A1
C2
1µ
ICSP
MRX
SCK
RESET
MISO
SCK
MOSI
MTX
J3
Relay Outputs
R1
R12
680
U7
AQV252GAX
R19
10
R1A
R2
R13
680
U6
AQV252GAX
R20
10
R2A
R3
R16
680
U8
AQV252GAX
R3A
+12V
R4
R6
680
U2
AQV252GAX
R7
10
R4A
R4B
Console Interface
U5
ST232CDR
C111µ
C121µ
C1+
C1−
C2+
C2−
VCC
V5+
VS−
C9
1µ
C10
1µ
C13
1µ
R15
100
R14
100
CTX
CRX
T1IN
T2IN
R1OUT
R2OUT
T1OUT
T2OUT
R1IN
R2IN
LOGIC
RS232
DCE
RxD
TxD
GND
J4
D5
ESDA25L
D6
ESDA25L
H2
H1
PWR_FLAG
File: remootio-adapter.kicad_sch
Title: Remootio Adapter – Hay Hoist
Size: A4
Date: 2024-08-06
Rev: 1.1
KiCad E.D.A. kicad 6.0.11+dfsg-1