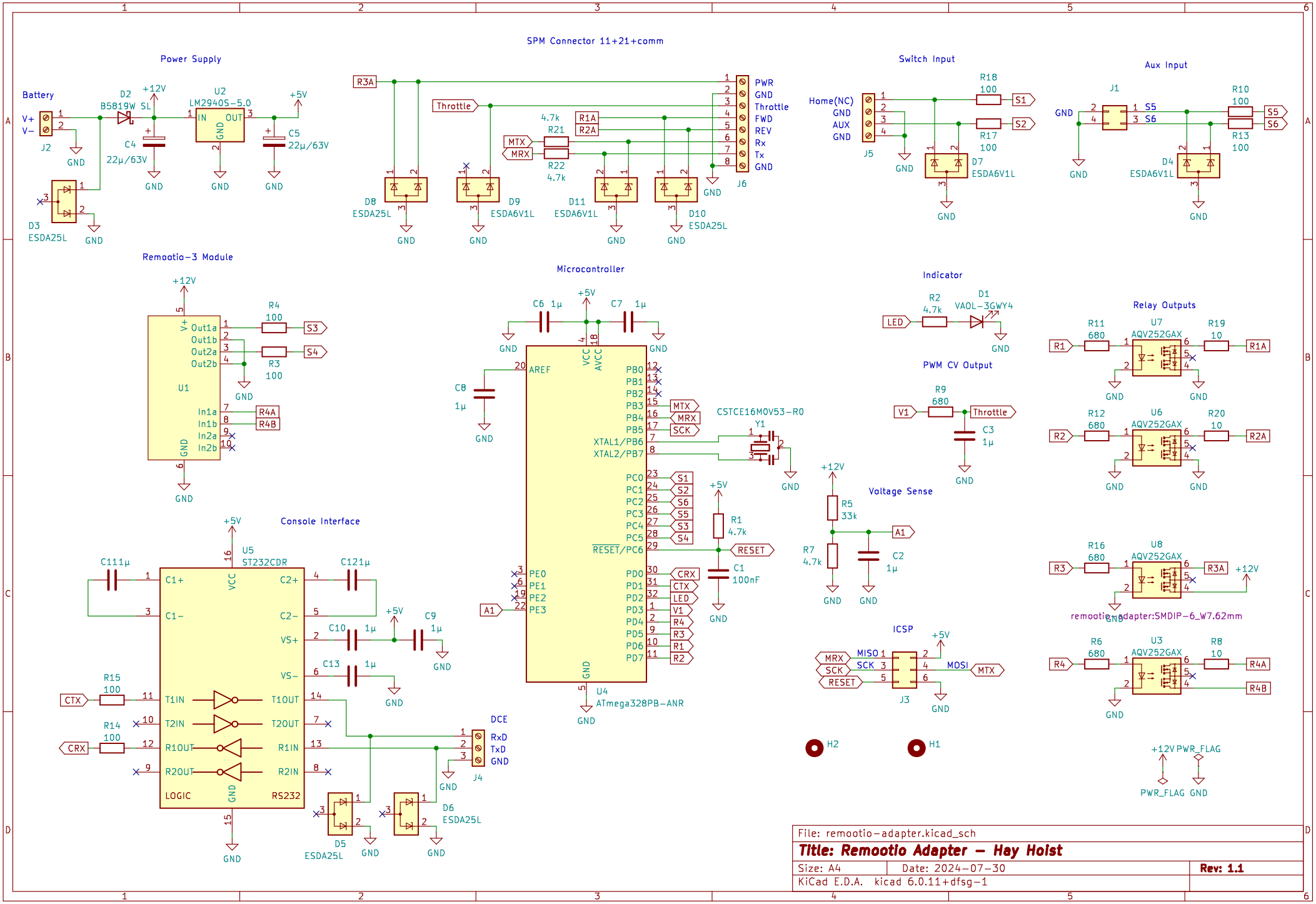

File: remootio-adapter.kicad_sch

Title: Remootio Adapter – Hay Hoist

Size: A4 | Date: 2024-07-30 | **Rev: 1.1**

KiCad E.D.A. kicad 6.0.11+dfsg-1