Adaptive RDMA Optimization for Distributed LLM Workloads

Week 2: Implementation Plan

Nathan Gopee
MS Computer Science, SUNY New Paltz
gopeen1@newpaltz.edu

Advisors: Dr. Wafi Danesh & Dr. Ashley Suchy

January 2026

1 Problem Statement

Distributed large language model inference suffers from communication bottlenecks that manifest as Time-To-First-Token (TTFT) latency. Current systems like vLLM use NCCL for GPU-to-GPU communication, which employs static routing strategies optimized for bulk transfers. This creates **head-of-line blocking**: small, latency-sensitive tensors (KV cache pages, attention scores) wait behind large bulk transfers (model weights, gradient accumulations).

This thesis develops an **adaptive RDMA middleware** that classifies tensor access patterns at runtime and routes transfers through dedicated paths—low-latency channels for frequently-accessed "hot" data and throughput-optimized channels for "cold" bulk transfers.

2 What vLLM Already Provides

Before defining contributions, it is essential to understand vLLM's existing architecture:

Feature	**vLLM Implementation**
KV Cache Management	PagedAttention with block-based allocation
Request Scheduling	Continuous batching with FCFS/priority policies
Single-Node Multi-GPU	`MultiProcExecutor` with tensor parallelism
Multi-Node Distribution	Ray + pipeline parallelism
GPU Communication	NCCL (all-reduce, all-gather)
KV Transfer (Disagg. P/D)	Connector abstraction (LMCache, SharedStorage)
Optimizations	Chunked prefill, prefix caching, speculative decoding

Table 1: vLLM capabilities this work builds upon, not replaces.

vLLM's distributed execution uses `MultiProcExecutor`, which spawns worker processes coordinated via shared-memory message queues. Inter-GPU communication occurs through NCCL, which discovers network topology at initialization but does not adapt routing based on runtime access patterns.

3 Thesis Contribution

This work introduces three components that integrate with vLLM's existing infrastructure:

3.1 Unified Telemetry Layer

A monitoring system that instruments tensor transfers to collect:

- Access frequency per tensor/KV block
- Transfer size distributions

- Queue depth at RDMA endpoints
- Latency percentiles (p50, p95, p99)

3.2 WFA-Based Adaptive Classifier

A Weighted Finite Automaton that classifies tensors into hot/cold categories based on observed patterns. States transition based on access frequency:

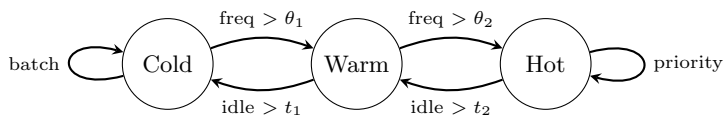

The classifier also detects workload phase (prefill vs. decode, training vs. inference) to adjust thresholds dynamically.

3.3 Smart RDMA Routing Layer

Dual-path routing implemented via `pyverbs` (libibverbs Python bindings):

- **Hot Path**: Dedicated Queue Pairs (QPs) with polled completions, RDMA Write with Immediate for sub-5μs transfers
- **Cold Path**: Batched transfers with event-driven completions, optimized for throughput over latency

Memory registration uses NUMA-aware allocation via `libnuma`:

- `numa_bind_to_node()`: Pin RDMA buffers to the same NUMA node as the HCA, avoiding QPI/UPI traversal penalties (40%+ throughput loss)
- `numa_interleave_nodes()`: For large tensors spanning multiple nodes, interleave allocation across NUMA domains
- Automatic NUMA topology detection via `/sys/devices/system/node/`

4 Architecture

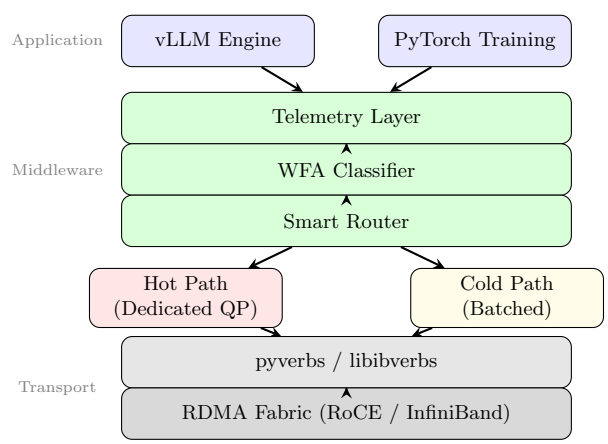

Figure 1: System architecture showing middleware integration points.

4.1 Integration Points

The middleware intercepts communication at two levels:

1. **Tensor Parallel Communication** (replacing NCCL):

```
# In vllm/distributed/parallel_state.py
def tensor_model_parallel_all_reduce(tensor):
    # Original: torch.distributed.all_reduce(tensor)
    # Modified: route through adaptive middleware
    pattern = wfa_classifier.classify(tensor)
```

```
    if pattern == "hot":
        rdma_hot_channel.all_reduce(tensor)
    else:
        rdma_cold_channel.batch_all_reduce(tensor)
```

2. KV Cache Transfers (extending vLLM's Connector abstraction):

```
# New connector: AdaptiveRDMAConnector
class AdaptiveRDMAConnector(KVConnectorBase):
    def save_kv_layer(self, layer_id, kv_tensors):
        for block in kv_tensors:
            pattern = self.classifier.classify(block)
            self.router.transfer(block, pattern)
```

5 Implementation Plan

5.1 Phase 1: Foundation (Weeks 1–4)

Step 1.1: Environment Setup

```
# Install RDMA stack on both nodes
sudo apt install rdma-core ibverbs-utils perftest libibverbs-dev
pip install pyverbs

# Enable SoftRoCE on 10GbE interface
sudo rdma link add rxe0 type rxe netdev eth0
rdma link  # Verify: rxe0 should appear

# Test connectivity
ibv_devices  # List RDMA devices
rping -s -v  # Server
rping -c -a <server_ip> -v  # Client
```

Step 1.2: Baseline Latency Measurement

```
# RDMA write latency (target: <10us for SoftRoCE)
ib_write_lat -d rxe0 -n 1000  # Server
ib_write_lat -d rxe0 -n 1000 <server_ip>  # Client

# TCP baseline for comparison
sockperf ping-pong -i <server_ip> --tcp
```

Step 1.3: pyverbs Buffer Pool Implementation

```
import pyverbs as pv
from pyverbs.pd import PD
from pyverbs.mr import MR
import numa

class RDMABufferPool:
    def __init__(self, ctx, size_mb=256, numa_node=0):
        self.pd = PD(ctx)
        # NUMA-aware allocation
        numa.bind(numa_node)
        self.mr = MR(self.pd, size_mb * 1024 * 1024,
                     pv.enums.IBV_ACCESS_LOCAL_WRITE |
                     pv.enums.IBV_ACCESS_REMOTE_WRITE)

    def get_buffer(self, size):
        # Suballocate from registered region
        ...
```

Deliverable: RDMA ping-pong achieving <10μs RTT on SoftRoCE.

5.2 Phase 2: Telemetry & Classification (Weeks 5–8)

Step 2.1: Instrument vLLM's KV Cache Manager

```
# In vllm/core/kv_cache_manager.py
class InstrumentedKVCacheManager(KVCacheManager):
    def __init__(self, ...):
        super().__init__(...)
        self.access_log = defaultdict(list)  # block_id -> timestamps

    def allocate_slots(self, request, num_tokens):
        blocks = super().allocate_slots(request, num_tokens)
        for block in blocks:
            self.access_log[block.id].append(time.monotonic_ns())
        return blocks
```

Step 2.2: Implement WFA Classifier

```
class TensorClassifier:
    COLD, WARM, HOT = 0, 1, 2
```

```
    def __init__(self, theta1=10, theta2=100, t_idle=0.1):
        self.state = {}  # tensor_id -> (state, last_access)
        self.theta1, self.theta2 = theta1, theta2
        self.t_idle = t_idle

    def classify(self, tensor_id, access_count, elapsed):
        current = self.state.get(tensor_id, (self.COLD, 0))
        if elapsed > self.t_idle:
            new_state = max(self.COLD, current[0] - 1)
        elif access_count > self.theta2:
            new_state = self.HOT
        elif access_count > self.theta1:
            new_state = self.WARM
        else:
            new_state = current[0]
        self.state[tensor_id] = (new_state, time.monotonic())
        return new_state
```

Step 2.3: Phase Detection (Prefill vs Decode)

```
def detect_phase(input_batch):
    # Prefill: many tokens, few sequences
    # Decode: few tokens (1 per seq), many sequences
    tokens_per_seq = input_batch.num_tokens / input_batch.num_seqs
    return "prefill" if tokens_per_seq > 8 else "decode"
```

Deliverable: Classifier achieving >90% accuracy on synthetic access patterns.

5.3 Phase 3: Routing Integration (Weeks 9–12)

Step 3.1: Dual-Path Queue Pair Pool

```
class DualPathRDMA:
    def __init__(self, ctx, num_hot_qps=4, num_cold_qps=2):
        # Hot path: dedicated QPs, polled completions
        self.hot_qps = [self._create_qp(ctx, poll=True)
                        for _ in range(num_hot_qps)]
        # Cold path: shared QPs, event-driven completions
        self.cold_qps = [self._create_qp(ctx, poll=False)
                         for _ in range(num_cold_qps)]
        self.cold_batch = []  # Accumulate for batching

    def transfer(self, tensor, classification):
        if classification == TensorClassifier.HOT:
            qp = self._get_least_loaded(self.hot_qps)
            self._rdma_write_immediate(qp, tensor)  # Sub-5us
        else:
            self.cold_batch.append(tensor)
            if len(self.cold_batch) >= 8:
                self._flush_cold_batch()
```

Step 3.2: vLLM Connector Integration

```
# New file: vllm/distributed/kv_transfer/adaptive_rdma.py
class AdaptiveRDMAConnector(KVConnectorBase):
    def __init__(self, config):
        self.rdma = DualPathRDMA(...)
        self.classifier = TensorClassifier()

    def save_kv_layer(self, layer_id, kv_tensors):
        for block_id, kv in enumerate(kv_tensors):
            cls = self.classifier.classify(
                f"{layer_id}:{block_id}",
                self.access_counts[block_id],
                time.monotonic() - self.last_access[block_id])
            self.rdma.transfer(kv, cls)
```

Step 3.3: Benchmark TTFT Improvement

```
# Run vLLM benchmark with adaptive connector
python -m vllm.entrypoints.openai.api_server \
    --model meta-llama/Llama-2-7b-hf \
    --tensor-parallel-size 2 \
    --kv-connector AdaptiveRDMAConnector

# Measure TTFT
python benchmarks/benchmark_serving.py \
    --model llama-7b --num-prompts 100
```

Deliverable: 30%+ TTFT reduction on 7B model inference.

5.4 Phase 4: Training Extension (Weeks 13–16)

Step 4.1: Adaptive All-Reduce for Gradients

```python
# Hook into PyTorch DDP gradient synchronization
class AdaptiveAllReduce:
    def __init__(self, process_group, rdma_pool):
        self.pg = process_group
        self.rdma = rdma_pool
        self.grad_classifier = TensorClassifier(theta1=5, theta2=50)

    def all_reduce(self, tensor):
        # Classify based on gradient magnitude variance
        cls = self._classify_gradient(tensor)
        if cls == TensorClassifier.HOT:
            # Critical gradients: immediate sync
            self.rdma.hot_all_reduce(tensor)
        else:
            # Bulk gradients: batched async
            self.rdma.cold_all_reduce_async(tensor)
```

Step 4.2: Integration with FSDP

```python
from torch.distributed.fsdp import FullyShardedDataParallel as FSDP

model = FSDP(model,
    process_group=AdaptiveProcessGroup(rdma_pool))
```

Step 4.3: Profile with Nsight Systems

```bash
nsys profile -o training_profile \
    python train.py --model llama-7b --use-adaptive-rdma
nsys stats training_profile.qdrep
```

Deliverable: Training throughput improvement of 15%+ over NCCL baseline.

5.5 Phase 5: Validation & Writing (Weeks 17–24)

Step 5.1: Comprehensive Benchmarking

```bash
# Test across model sizes
for model in llama-7b llama-13b llama-70b; do
    for tp in 2 4 8; do
        python benchmark.py --model $model --tp $tp \
            --connector {nccl,adaptive_rdma} \
            --metrics ttft,tpot,throughput
    done
done
```

Step 5.2: Ablation Studies

- WFA classifier vs. static hot/cold assignment
- Hot-path only vs. dual-path routing
- NUMA-aware vs. NUMA-oblivious allocation
- Threshold sensitivity analysis (θ_1, θ_2, t_{idle})

Step 5.3: Thesis Writing Timeline

- Week 17–18: Introduction, Background, Related Work
- Week 19–20: Design and Implementation chapters
- Week 21–22: Evaluation chapter with all figures
- Week 23–24: Conclusion, revisions, defense prep

Deliverable: Complete thesis with reproducible benchmarks and defense.

6 Expected Results

Metric	Baseline	Target	Measurement
TTFT (7B model)	∼150ms	<100ms	vLLM benchmark suite
TTFT (70B model, 2-node)	∼800ms	<500ms	vLLM benchmark suite
P99 latency variance	High (HOL)	Low	Custom telemetry
Gradient sync overhead	30% step time	<15%	PyTorch profiler

Table 2: Target performance improvements.

7 Hardware & Software Requirements

Lab Hardware:

- Cerberus: 2× RTX 5090 (32GB each)
- Chimera: 3× RTX 3090 (24GB each)
- Network: 10GbE with SoftRoCE, potential 100GbE upgrade

Software Stack:

- `vllm` (fork with connector modifications)
- `pyverbs` from `rdma-core`
- `ray` for distributed coordination
- `libnuma` for NUMA-aware allocation
- NVIDIA driver 550+, CUDA 12.4+

Key Repositories:

- `https://github.com/vllm-project/vllm`
- `https://github.com/linux-rdma/rdma-core`
- `https://github.com/NVIDIA/nccl` (baseline comparison)
- `https://github.com/linux-rdma/perftest`
- `https://github.com/teslamotors/ttpoe` – Tesla's RDMA implementation (xAI cluster optimizations)
- `https://github.com/ndg8743/x99-udp4-rebar` – Custom BIOS for Resizable BAR on X99

RDMA & InfiniBand Documentation:

- Arch Wiki: InfiniBand – Comprehensive setup guide

vLLM & Inference Framework Resources:

- Anatomy of vLLM – Official deep-dive into vLLM internals
- GPUDirect RDMA vs Standard RDMA Benchmarking – Pipeline parallel performance analysis
- vLLM vs TensorRT-LLM Performance Discussion – Community benchmarks
- Jake's Exo Distributed Inference Demo – Multi-node inference demonstration

8 Risk Mitigation

Risk	Mitigation
SoftRoCE performance insufficient	Focus on algorithmic contribution; note hardware RDMA would improve results
vLLM API changes break integration	Pin to specific commit; abstract integration layer
Classification overhead exceeds benefit	Implement lightweight WFA; batch classification decisions
Limited 100GbE access	Demonstrate on 10GbE; project improvements

9 Future Work: LLM for RISC-V Assembly Generation

A secondary research direction involves training/fine-tuning an LLM to generate RISC-V assembly code. Recent work by Hossain et al. (2024) explored using ChatGPT for RISC processor design, finding that while LLMs can assist with hardware code generation, significant human intervention is still required to fix bugs.

Planned Approach:

- **Dataset curation**: Collect RISC-V assembly examples from open-source projects, compiler outputs, and educational materials

- **Fine-tuning**: Use the homelab's V100 + 5070 Ti (48GB VRAM) to fine-tune a code-focused model (e.g., CodeLlama, StarCoder) on RISC-V assembly
- **Validation pipeline**: Automated testing via RISC-V emulators (Spike, QEMU) to verify generated code correctness
- **Integration**: Explore FPGA deployment for real hardware validation using the Xilinx UltraScale+ boards

This leverages the same distributed inference infrastructure being developed for the primary thesis work, demonstrating practical application of the RDMA optimizations.

10 Conclusion

This thesis addresses a concrete performance bottleneck in distributed LLM systems by introducing runtime-adaptive communication optimization. The work builds on vLLM's production-grade infrastructure while contributing a novel pattern-aware routing layer. The approach is validated on consumer hardware, demonstrating that intelligent communication scheduling can achieve latency improvements previously requiring expensive InfiniBand deployments.