STM32MP257F-EV1

MB1936

Table of contents

Sheet 1: Project overview (this page)

Sheet 2: Top View

Sheet 3: STM32MP257 I/Os

Sheet 4: Power PMIC

Sheet 5: STM32MP257 Power

Sheet 6: 2_DDR4_16bits

Sheet 7: Ethernet 1

Sheet 8: Ethernet 2

Sheet 9: Ethernet 3

Sheet 10: FDCAN

Sheet 11: USB_PCIe

Sheet 12: USB_HUB

Sheet 13: SDcard_eMMC

Sheet 14: QSPI_NOR

Sheet 15: Video

Sheet 16: Expansion and mikroBUS connectors

Sheet 17: Peripherals

Sheet 18: STlink V3EC

Legend

General comment such as function title, configuration, ...

Text to be added to silkscreen.

Warning text.

Notes to generate the board layout.

Open Platform License Agreement

The Open Platform License Agreement (“Agreement”) is a binding legal contract between you ("You") and STMicroelectronics International N.V. (“ST”), a company incorporated under the laws of the Netherlands acting for the purpose of this Agreement through its Swiss branch 39, Chemin du Champ des Filles, 1228 Plan-les-Ouates, Geneva, Switzerland.

By using the enclosed reference designs, schematics, PC board layouts, and documentation, in hardcopy or CAD tool file format (collectively, the “Reference Material”), You are agreeing to be bound by the terms and conditions of this Agreement. Do not use the Reference Material until You have read and agreed to this Agreement terms and conditions. The use of the Reference Material automatically implies the acceptance of the Agreement terms and conditions.

The complete Open Platform License Agreement can be found on www.st.com/opla.

U_MB1936-TOP
MB1936-TOP.SchDoc

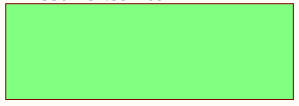

Title: **Project overview**			
Project: **STM32MP257F-EV1**			
Variant: MP257F_X			
Revision: D-01		Reference: MB1936	
Size: A4	Date: 16-MAY-24	Sheet: 1 of 18	

life.augmented

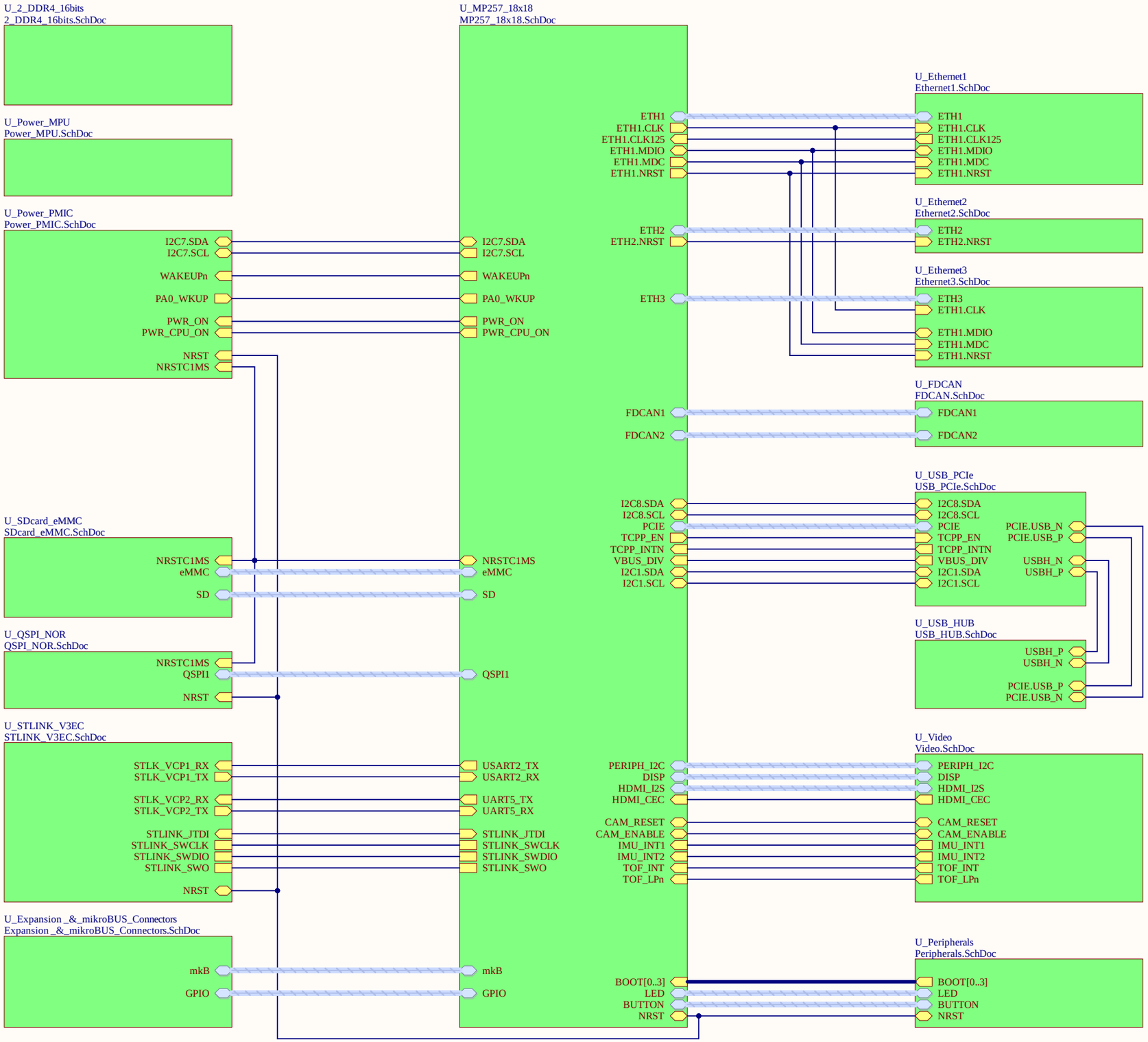

Title: **TOP**		
Project: **STM32MP257F-EV1**		
Variant: MP257F_X		
Revision: D-01		Reference: MB1936
Size: A3	Date: 16-MAY-24	Sheet: 2 of 18

life.augmented

uSD

SD
SD: SDMMC1_D[0..3] SDMMC1_CK SDMMC1_CMD uSD_DETECT
SDMMC1_D[0..3] SD.SDMMC1_D[0..3]
SDMMC1_CK SD.SDMMC1_CK
SDMMC1_CMD SD.SDMMC1_CMD
uSD_DETECT SD.uSD_DETECT

QUADSPI

QSPI1
QSPI: IO[0..3] CLK NCS
IO[0..3] QSPI1.IO[0..3]
CLK QSPI1.CLK
NCS QSPI1.NCS1

eMMC

eMMC
eMMC: SDMMC2_D[0..7] SDMMC2_CK SDMMC2_CMD
SDMMC2_D[0..7] eMMC.SDMMC2_D[0..7]
SDMMC2_CK eMMC.SDMMC2_CK
SDMMC2_CMD eMMC.SDMMC2_CMD

STLINK

STLINK_SWDIO JTMS_SWDIO
STLINK_SWCLK JTCK_SWCLK
STLINK_JTDI JTDI
STLINK_SWO JTDO_SWDO

VIDEO

DISP
DISP: TE RESET LVDS_INT BLCTRL LED_EN DSI_INT
TE DISP.TE
RESET DISP.RESET
LVDS_INT DISP.LVDS_INT
BLCTRL DISP.BLCTRL
LED_EN DISP.LED_EN
DSI_INT DISP.DSI_INT

HDMI_I2S
HDMI_I2S: CK WS SDO
CK HDMI_I2S2.CK
WS HDMI_I2S2.WS
SDO HDMI_I2S2_SDO

HDMI_CEC HDMI_CEC

CAM_ENABLE CAM_ENABLE
CAM_RESET CAM_RESET

TOF_LPn TOF_LPn
TOF_INT TOF_INT
IMU_INT1 IMU_INT1
IMU_INT2 IMU_INT2

FDCAN

FDCAN1
FDCAN1: CAN_STBY CAN_TX CAN_RX
CAN_STBY FDCAN1.STBY
CAN_TX FDCAN1.TX
CAN_RX FDCAN1.RX

FDCAN2
FDCAN2: CAN_STBY CAN_TX CAN_RX
CAN_STBY FDCAN3.STBY
CAN_TX FDCAN3.TX
CAN_RX FDCAN3.RX

ETHERNET

ETH1.CLK ETH1.CLK
ETH1.CLK125 ETH1.CLK125
ETH1.MDIO ETH1.MDIO
ETH1.MDC ETH1.MDC
ETH1.NRST ETH1.NRST
R206 10K
ETH2.NRST ETH2.NRST
R205 10K

ETH1
ETH1: MDINT TXD[0..3] TX_CTL GTX_CLK RXD[0..3] RX_CTL RX_CLK
MDINT ETH1.MDINT PHY_INTN
TXD[0..3] ETH1.TXD[0..3]
TX_CTL ETH1.TX_CTL TX_EN
GTX_CLK ETH1.GTX_CLK
RXD[0..3] ETH1.RXD[0..3]
RX_CTL ETH1.RX_CTL RX_DV
RX_CLK ETH1.RX_CLK

ETH2
ETH2: CLK CLK125 MDINT MDIO MDC TXD[0..3] TX_CTL GTX_CLK RXD[0..3] RX_CTL RX_CLK
CLK ETH2.CLK
CLK125 ETH2.CLK125
MDINT ETH2.MDINT PHY_INTN
MDIO ETH2.MDIO
MDC ETH2.MDC
TXD[0..3] ETH2.TXD[0..3]
TX_CTL ETH2.TX_CTL TX_EN
GTX_CLK ETH2.GTX_CLK
RXD[0..3] ETH2.RXD[0..3]
RX_CTL ETH2.RX_CTL RX_DV
RX_CLK ETH2.RX_CLK

ETH3
ETH3: MDINT TXD[0..3] TX_CTL GTX_CLK RXD[0..3] RX_CTL RX_CLK
MDINT ETH3.MDINT PHY_INTN
TXD[0..3] ETH3.TXD[0..3]
TX_CTL ETH3.TX_CTL TX_EN
GTX_CLK ETH3.GTX_CLK
RXD[0..3] ETH3.RXD[0..3]
RX_CTL ETH3.RX_CTL RX_DV
RX_CLK ETH3.RX_CLK

LED-BUTTON

LED
LED: LED1 LED2 LED3 LED4
LED1 LED1
LED2 LED2
LED3 LED3
LED4 LED4

BUTTON
BUTTON: TAMP USER1 USER2
TAMP BUTTON.TAMP
USER1 BUTTON.USER1
USER2 BUTTON.USER2

BOOT MODE

BOOT[0..3] BOOT[0..3]

U27A

PA0_WKUP	Y2	PA0	PC0	AA12	ETH1.GTX_CLK
ETH3.MDINT	V15	PA1	PC1	V11	ETH1.TXD1
ETH3.RX_CTL	W13	PA2	PC2	Y11	ETH1.RXD1
ETH3.TX_CTL	T14	PA3	PC3	W9	ETH2.RX_CTL
USART2_TX	Y15	PA4	PC4	V9	ETH2.TX_CTL
ETH3.RX_CLK	Y13	PA5	PC5	U9	ETH2.MDIO
ETH3.TXD0	V14	PA6	PC6	AA10	ETH2.MDC
ETH3.TXD1	Y14	PA7	PC7	Y8	ETH2.TXD0
USART2_RX	W15	PA8	PC8	V8	ETH2.TXD1
ETH3.RXD0	T12	PA9	PC9	U8	ETH2.TXD2
ETH3.RXD1	U13	PA10	PC10	T8	ETH2.TXD3
ETH1.RX_CTL	W12	PA11	PC11	AB7	ETH2.RXD3
ETH1.MDINT	U12	PA12	PC12	Y7	ETH2.RXD1
ETH1.TX_CTL	Y12	PA13	PC13	P6	WAKEUPn
ETH1.RX_CLK	U10	PA14	OSC32_IN	R1	OSC32_IN
ETH1.TXD0	T10	PA15	OSC32_OUT	R2	OSC32_OUT
HDMI_I2S2.CK	C11	PB0	PD0	D14	QSPI1.CLK
GPIO.SPI3_NSS	D11	PB1	PD1	E15	
	C10	PB2	PD2	E14	BUTTON.User1
	E10	PB3	PD3	C15	QSPI1.NCS1
I2C2.SDA PERIPH	D10	PB4	PD4	C14	QSPI1.IO0
I2C2.SCL PERIPH	B11	PB5	PD5	B15	QSPI1.IO1
	C12	PB6	PD6	A15	QSPI1.IO2
GPIO.SPI3_SCK	D12	PB7	PD7	D15	QSPI1.IO3
GPIO.SPI3_MOSI	G11	PB8	PD8	C13	LED2
GPIO.TIM10_CH1	A12	PB9	PD9	B13	SD.uSD_DETECT
GPIO.SPI3_MISO	A11	PB10	PD10	D13	DISP.DSI_INT
GPIO.TIM12_CH2	B12	PB11	PD11	E13	
GPIO.SDMMC3_D2	B20	PB12	PD12	A21	GPIO.SDMMC3_CMD
GPIO.SDMMC3_CK	D19	PB13	PD13	B21	GPIO.SDMMC3_D1
GPIO.SDMMC3_D0	C20	PB14	PD14	G15	I2C7.SDA PMIC
mkB.PWM	AB4	PB15	PD15	F16	I2C7.SCL PMIC

VDDIO4: PB0 PB1 PB2 PB3 PB4 PB5 PB6 PB7 PB8 PB9 PB10 PB11 PB12 PB13 PB14 PB15
VDDIO3: PD0 PD1 PD2 PD3 PD4 PD5 PD6 PD7 PD8 PD9 PD10 PD11 PD12 PD13 PD14 PD15
VSW: PC13
PDR_ON: PDR_ON VDDA18AON

STM32MP257FAI3

U27B

SD.SDMMC1_D2	A16	PE0	PG0	W7	ETH2.RXD0
SD.SDMMC1_D3	B16	PE1	PG1	W6	TCPP_INTN
SD.SDMMC1_CMD	C16	PE2	PG2	Y4	TCPP_EN
SD.SDMMC1_CK	D16	PE3	PG3	W4	
SD.SDMMC1_D0	B17	PE4	PG4	AA4	
SD.SDMMC1_D1	C17	PE5	PG5	L1	GPIO.USART6_RTS
eMMC.SDMMC2_D6	E16	PE6	PG6	H2	ETH2.NRST
eMMC.SDMMC2_D7	D17	PE7	PG7	K4	TOF_LPn
eMMC.SDMMC2_D2	C18	PE8	PG8	L5	BUTTON.User2
eMMC.SDMMC2_D5	D18	PE9	PG9	G3	UART5_TX
eMMC.SDMMC2_D4	A19	PE10	PG10	H3	UART5_RX
eMMC.SDMMC2_D1	E17	PE11	PG11	J4	FDCAN1.TX
eMMC.SDMMC2_D3	C19	PE12	PG12	J3	FDCAN1.RX
eMMC.SDMMC2_D0	B19	PE13	PG13	K5	I2C1.SCL
eMMC.SDMMC2_CK	A20	PE14	PG14	G4	DISP.RESET
eMMC.SDMMC2_CMD	F17	PE15	PG15	H4	DISP.LED_EN
ETH1.MDC	V12	PF0	OSC_IN	V3	HSE_IN
ETH1.RXD0	W11	PF1	OSC_OUT	V2	HSE_OUT
ETH1.MDIO	V10	PF2	VDDA18AON		
ETH1.CLK	W10	PF3	PH2	V13	ETH3.GTX_CLK
ETH2.CLK	Y10	PF4	PH3	W14	ETH3.TXD3
ETH2.MDINT	Y9	PF5	PH4	AB15	LED1 BOOTFAILN
ETH2.RX_CLK	AB8	PF6	PH5	AA15	PCIE.NWAKE
ETH2.GTX_CLK	T9	PF7	PH6	AA14	ETH3.TXD2
ETH2.CLK125	AA8	PF8	PH7	T13	ETH3.RXD2
ETH2.RXD2	AA7	PF9	PH8	U14	ETH3.RXD3
TP35 MCO2 VBUS_DIV ADC3P2	AA6	PF10	PH9	AB12	ETH1.CLK125
TP11 MCO1 MCO1	Y6	PF11	PH10	U11	ETH1.TXD2
	K3	PF12	PH11	T11	ETH1.TXD3
GPIO.USART6_TX	L4	PF13	PH12	AA11	ETH1.RXD2
GPIO.USART6_RX	H1	PF14	PH13	AB11	ETH1.RXD3
GPIO.USART6_CTS	L7	PF15			

VDDIO1: PE0 PE1 PE2 PE3 PE4 PE5
VDDIO2: PE6 PE7 PE8 PE9 PE10 PE11 PE12 PE13 PE14 PE15

STM32MP257FAI3

U27C

CAM_ENABLE	G5	PI0	PK0	F12	HDMI_CEC
I2C1.SDA	H6	PI1	PK1	E12	HDMI_I2S2_SDO
TOF_INT	J5	PI2	PK2	F13	
IMU_INT1	J6	PI3	PK3	F15	
IMU_INT2	K6	PI4	PK4	F11	
DISP.BLCTRL	H5	PI5	PK5	F14	
	J7	PI6	PK6	G12	
CAM_RESET	L6	PI7	PK7	G14	
BUTTON.TAMP	M6	PI8 VSW			
DISP.TE	K7	PI9	PZ0	N5	mkB.MOSI
	G16	PI10	PZ1	N6	mkB.MISO
GPIO.SDMMC3_D3	E18	PI11	PZ2	P4	mkB.SCK
FDCAN3.RX	G1	PI12	PZ3	N4	I2C8.SDA
DISP.LVDS_INT	G2	PI13	PZ4	R5	I2C8.SCL
HDMI_I2S2.WS	G13	PI14	PZ5	P5	mkB.RST
	E11	PI15	PZ6	R6	mkB.CS
PCIE.CLKREQN	U15	PJ0	PZ7	P2	mkB.TX
GPIO.GPIO7	Y3	PJ1	PZ8	P3	mkB.RX
GPIO.SAI2_SDB	AB3	PJ2	PZ9	N3	mkB.INT
GPIO.SAI2_FSA	AA3	PJ3	ANA0	V5	mkB.AN
GPIO.TIM8_CH4	W3	PJ4	ANA1	V6	
GPIO.TIM8_CH1	V4	PJ5		T7	VDDA1V8_AON
LED3	U5	PJ6	PDR_ON		
LED4	W2	PJ7	VDDA18AON	U3	NRST
PCIE.RSTN	M2	PJ8	NRST	T3	NRSTC1MS
ETH1.NRST	M1	PJ9	NRSTC1MS		
	M3	PJ10		T5	PWR_ON
GPIO.SAI2_SCKA	M5	PJ11	PWR_ON	U4	TP12
GPIO.SAI2_SDA	L2	PJ12	PWR_LP		
FDCAN1.STBY	M4	PJ13		T6	PWR_CPU_ON
FDCAN3.TX	L3	PJ14	PWR_CPUON		
FDCAN3.STBY	K2	PJ15		Y1	JTMS_SWDIO
			JTMS_SWDIO	AA1	JTCK_SWCLK
BOOT0	R4	BOOT0	JTCK_SWCLK	AB2	JTDI
BOOT1	R3	BOOT1	JTDI	W1	JTDO_SWDO
BOOT2	T2	BOOT2	JTDO_TRACESWO	AA2	NJTRST
BOOT3	T1	BOOT3	NJTRST		TP13
					TP30

GND

STM32MP257FAI3

VDDIO R27 DNF 10K R272 10K PWR_CPU_ON
PWR_ON R74 DNF 10K

OSC

OSC32_IN C86 6.8pF
X1 32.768KHz
OSC32_OUT R64 0R C81 6.8pF

X2

VDDA1V8_AON R70 DNF 10R
DNF C91 10nF
X2: VDD OUT EN GND
NX1612SA 40MHz
HSE_IN C90 6.8pF
C92 6.8pF R72 1K DNF
R75 0R HSE_OUT

CN22

JTMS_SWDIO 2
JTCK_SWCLK 4
JTDO_SWDO 6
JTDI 8
NRST 10
CN22: 2 1 / 4 3 / 6 5 / 8 7 / 10 9
VDDIO
1 3 5 7 JTCK_SWCLK 9
Header 5x2
MIPI10

PCIe-USB

PCIE
PCIE: NWAKE CLKREQN RSTN
NWAKE PCIE.NWAKE
CLKREQN PCIE.CLKREQN
RSTN PCIE.RSTN
R96 10K
VBUS_DIV VBUS_DIV
TCPP_INTN TCPP_INTN
TCPP_EN TCPP_EN

EXPANSION

GPIO
GPIO: I2C2.SCL I2C2.SDA I2C8.SDA I2C8.SCL MCO1 TIM8.CH4 TIM12.CH2 PI.GPIO7 SPI3.NSS SPI3.MISO SPI3.MOSI SPI3.SCK TIM10.CH1 TIM8.CH1 USART6.TX USART6.RX USART6.CTS USART6.RTS SAI2.SCKA SAI2.FSA SAI2.SDA SAI2.SDB SDMMC3.CK SDMMC3.CMD SDMMC3.D0 SDMMC3.D1 SDMMC3.D2 SDMMC3.D3
I2C2.SCL I2C2.SCL
I2C2.SDA I2C2.SDA
I2C8.SDA I2C8.SDA
I2C8.SCL I2C8.SCL
MCO1 MCO1
TIM8.CH4 GPIO.TIM8_CH4
TIM12.CH2 GPIO.TIM12_CH2
PI.GPIO7 GPIO.GPIO7
SPI3.NSS GPIO.SPI3_NSS
SPI3.MISO GPIO.SPI3_MISO
SPI3.MOSI GPIO.SPI3_MOSI
SPI3.SCK GPIO.SPI3_SCK
TIM10.CH1 GPIO.TIM10_CH1
TIM8.CH1 GPIO.TIM8_CH1
USART6.TX GPIO.USART6_TX
USART6.RX GPIO.USART6_RX
USART6.CTS GPIO.USART6_CTS
USART6.RTS GPIO.USART6_RTS
SAI2.SCKA GPIO.SAI2_SCKA
SAI2.FSA GPIO.SAI2_FSA
SAI2.SDA GPIO.SAI2_SDA
SAI2.SDB GPIO.SAI2_SDB
SDMMC3.CK GPIO.SDMMC3_CK
SDMMC3.CMD GPIO.SDMMC3_CMD
SDMMC3.D0 GPIO.SDMMC3_D0
SDMMC3.D1 GPIO.SDMMC3_D1
SDMMC3.D2 GPIO.SDMMC3_D2
SDMMC3.D3 GPIO.SDMMC3_D3

mikroBUS

mkB
mikroBUS: mkB_AN mkB_RST SPI8_NSS SPI8_SCK SPI8_MISO SPI8_MOSI TIM3_CH2 mkB_INT LPUART1_RX LPUART1_TX I2C8_SCL I2C8_SDA
mkB_AN mkB.AN
mkB_RST mkB.RST
SPI8_NSS mkB.CS
SPI8_SCK mkB.SCK
SPI8_MISO mkB.MISO
SPI8_MOSI mkB.MOSI
TIM3_CH2 mkB.PWM
mkB_INT mkB.INT
LPUART1_RX mkB.RX
LPUART1_TX mkB.TX
I2C8_SCL I2C8.SCL
I2C8_SDA I2C8.SDA

POWER - PMIC

PA0_WKUP PA0_WKUP
NRST NRST
NRSTC1MS NRSTC1MS
PWR_ON PWR_ON
WAKEUPn WAKEUPn
PWR_CPU_ON PWR_CPU_ON
C336 10nF
GND
I2C7.SDA I2C7.SDA R260 1K5
I2C7.SCL I2C7.SCL R261 1K5
VDDIO

UART - DEBUG

USART2_TX USART2_TX BOOT_VCPA35 BOOT_VCPA35
USART2_RX USART2_RX
VDDIO 10K R107
UART5_TX UART5_TX VCPM33 VCPM33
UART5_RX UART5_RX
10K R125

I2C-I3C

I2C1.SDA I2C1.SDA R228 1K5
I2C1.SCL I2C1.SCL R224 1K5
3V3
PERIPH_I2C
PERIPH_I2C: I2C2.SDA I2C2.SCL
I2C2.SDA I2C2.SDA R31 1K5
I2C2.SCL I2C2.SCL R32 1K5
VDDIO
I2C8.SDA I2C8.SDA I3C4_SDA R246 1K5
I2C8.SCL I2C8.SCL I3C4_SCL R245 1K5
VDDIO

Title: STM32MP257 I/Os			
Project: STM32MP257F-EV1			
Variant: MP257F_X			
Revision: D-01		Reference: MB1936	
Size: A3	Date: 16-MAY-24	Sheet: 3 of 18	

life.augmented

CN20 VIN_JACK F1
DC10B
PTC FUSE 2.6A
C127 100uF
C148 10uF
C117 10uF
C116 100nF
C130 22pF
U37 ST1S40IPUR
VINSW VINA EN NC SW FB GND PGND EPAD
L8 3.3uH
R208 110K
100nH LQH3C151 DNF
R204 20K
C118 47uF
C114 47uF
5V_STLK
JP4 Header 3x1
5.2V
R210 270R
LD11 GREEN
5V_VIN
C42 100uF
C147 100uF
HW1 SNT-100-BK-G

Typical Power supply source:
- 5V_DC (3A min)

U26

5V_VIN
C29 10uF
BUCK1IN PGND1 BUCK1 VLX1 VOUT1
VDDCPU_FB
L3 0.68uH
VDDCPU_1 670mV/ 800mV/ 910mV
C26 22uF C27 22uF C28 22uF

C32 10uF
BUCK2IN PGND2 BUCK2 VLX2 VOUT2
VDDCORE_FB
L2 0.68µH
VDDCORE_1 670mV/ 820mV
C21 22uF C22 22uF C23 22uF C24 22uF

C38 10uF
BUCK3IN PGND3 BUCK3 VLX3 VOUT3
VDDGPU_FB
L4 0.68µH
VDDGPU_1 800mV/ 900mV
C34 22uF C35 22uF C36 22uF C37 22uF

C46 10uF
BUCK4IN PGND4 BUCK4 VLX4 VOUT4
VDDIO_FB
L6 2.2uH
VDDIO_1 3V3
C52 22uF C54 22uF C53 22uF

C67 1uF
LDO12IN Supply Mux LDO1 LDO1OUT
LDO2 LDO2OUT
R58 0R
VDDA1V8_AON 1V8
C66 4.7uF
VDD_EMMC 3V3
C65 4.7uF

C30 10uF
BUCK5IN PGND5 BUCK5 VLX5 VOUT5
1V8_FB
L1 2.2uH
1V8_1
C16 22uF C17 22uF C18 22uF

C45 10uF
BUCK6IN PGND6 BUCK6 VLX6 VOUT6
VDD_DDR_FB
L5 0.68uH
VDD_DDR_1 1V2
C47 22uF C44 22uF C41 22uF
REFDDR REFDDR
VREF_DDR
R52 0R
0V6
C43 1uF

5V_VIN
C56 10uF
BUCK7IN PGND7 BUCK7 VLX7 VOUT7
L7 0.68uH
3V3
C59 22uF C58 22uF C57 22uF C60 22uF

VDD_DDR
C39 10uF
LDO3IN LDO3 LDO3OUT
VTT_DDR
0V6
C40 10uF

5V_VIN
C68 4.7uF
C71 4.7uF
VIN INTLDO INTLDO
VBUS Supply Mux LDO4 LDO4OUT
C75 4.7uF
VDD3V3_USB
C61 4.7uF

5V_VIN
C64 1uF
LDO56IN LDO5 LDO5OUT
LDO6 LDO6OUT
VPP_DDR
2V5
C74 4.7uF
VDD_XXXX
C73 4.7uF

5V_VIN
DNF R56 0R
3V3
R57 0R
C70 1uF
LDO78IN LDO7 LDO7OUT
LDO8 LDO8OUT
VDD_SDCARD 3V3
C72 4.7uF
VDDIO_SDCARD
C63 4.7uF
AGND GNDLDO
VDDIO
C67 1uF

VIO
SDA SCL PWRCTRL1 PWRCTRL2 PWRCTRL3 RSTn WAKEUPn PONKEYn
VIO domain
System Control & Logic
VIO domain
INTn
PA0_WKUP
GND
TP8 TP

I2C7.SDA
I2C7.SCL
PWR_ON
PWR_CPU_ON
NRSTC1MS
NRST
R61 0R
R60 0R
R59 0R
R38 0R
R46 0R
WAKE UP B2
WAKEUPn
SW-PUSH-TSS644S
C5 10nF
HW6

STPMIC25A

POWER MEASUREMENT

I_SENS_VDDCPU_P R43 100mR I_SENS_VDDCPU_N
C25 22uF
VDDCPU_1 R39 0R LNK6 VDDCPU VDDCPU_FB LNK4

I_SENS_VDDCORE_P R42 33mR I_SENS_VDDCORE_N
C20 22uF
VDDCORE_1 R36 0R LNK5 VDDCORE VDDCORE_FB LNK2

I_SENS_VDDGPU_P R51 33mR I_SENS_VDDGPU_N
C33 22uF
VDDGPU_1 R45 0R LNK10 VDDGPU VDDGPU_FB LNK7

I_SENS_VDDIO_P R54 330mR I_SENS_VDDIO_N
C55 22uF
VDDIO_1 R53 0R LNK12 VDDIO VDDIO_FB LNK11

I_SENS_VDD_DDR_P R48 100mR I_SENS_VDD_DDR_N
C31 22uF
VDD_DDR_1 R47 0R LNK9 VDD_DDR VDD_DDR_FB LNK8

I_SENS_1V8_P R41 330mR I_SENS_1V8_N
C19 22uF
1V8_1 R35 0R LNK3 1V8 1V8_FB LNK1

CN10 Jumper_Header 7x2

VDDIO	I_SENS_VDDIO_P	1	1 2	2	I_SENS_VDDIO_N	
CPU	I_SENS_VDDCPU_P	3	3 4	4	I_SENS_VDDCPU_N	
CORE	I_SENS_VDDCORE_P	5	5 6	6	I_SENS_VDDCORE_N	
GND		7	7 8	8		
GPU	I_SENS_VDDGPU_P	9	9 10	10	I_SENS_VDDGPU_N	
DDR	I_SENS_VDD_DDR_P	11	11 12	12	I_SENS_VDD_DDR_N	
1V8	I_SENS_1V8_P	13	13 14	14	I_SENS_1V8_N	

1V5 PCIe

3V3 R55 0R C76 10uF
U30 ST1L05BPUR
VI EN GND GND PG VO ADJ EP
R65 19K6 R62 82K
C89 10uF R69 0R 1V5_PCIE

Title:	**Power PMIC**
Project:	**STM32MP257F-EV1**
Variant:	MP257F_X
Revision:	D-01
Reference:	MB1936
Size:	A3
Date:	16-MAY-24
Sheet:	4 of 18

Power MPU

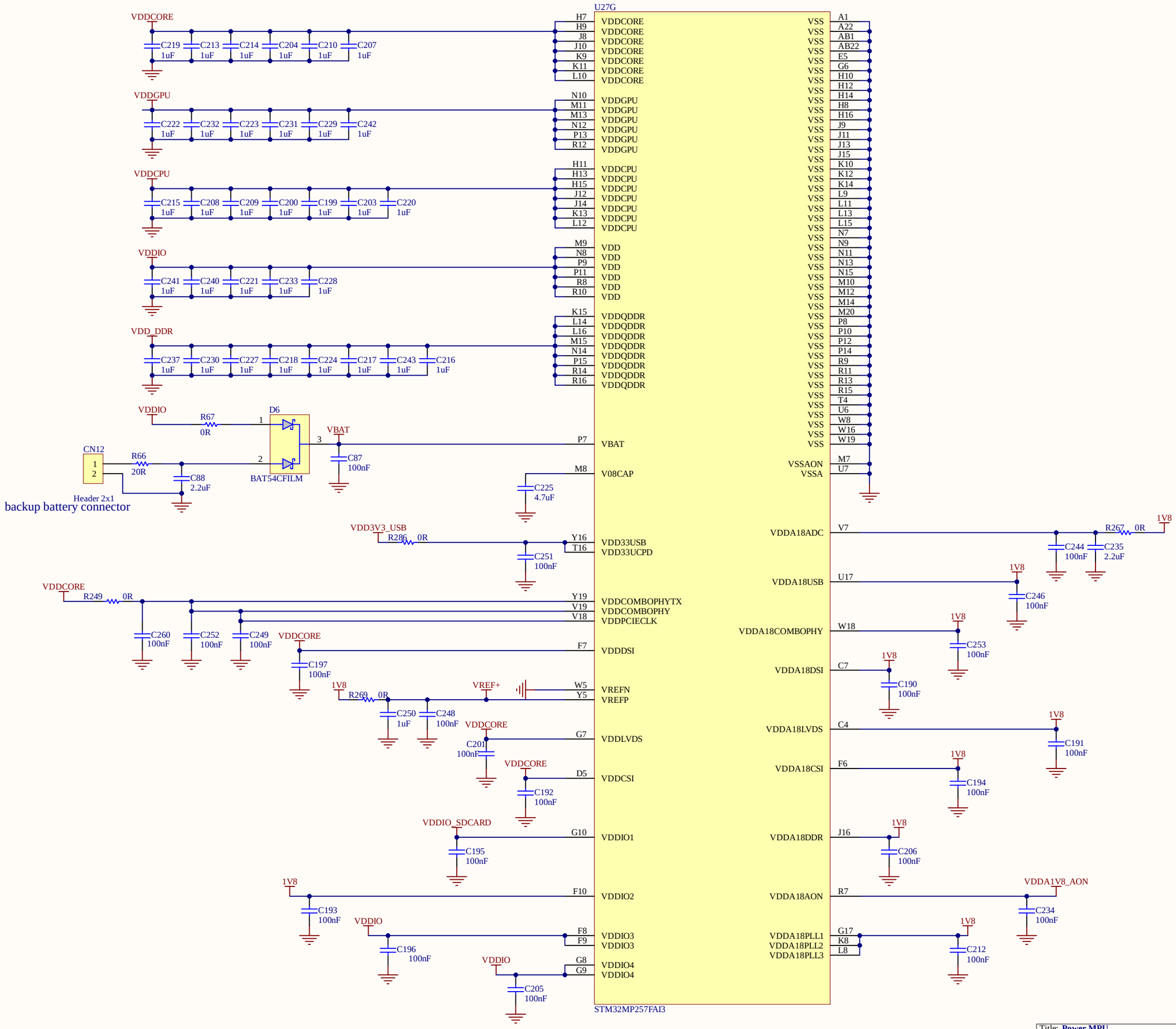

Title: **Power MPU**		
Project: **STM32MP257F-EV1**		
Variant: MP257F_X		
Revision: D-01		Reference: MB1936
Size: A3	Date: 16-MAY-24	Sheet: 5 of 18

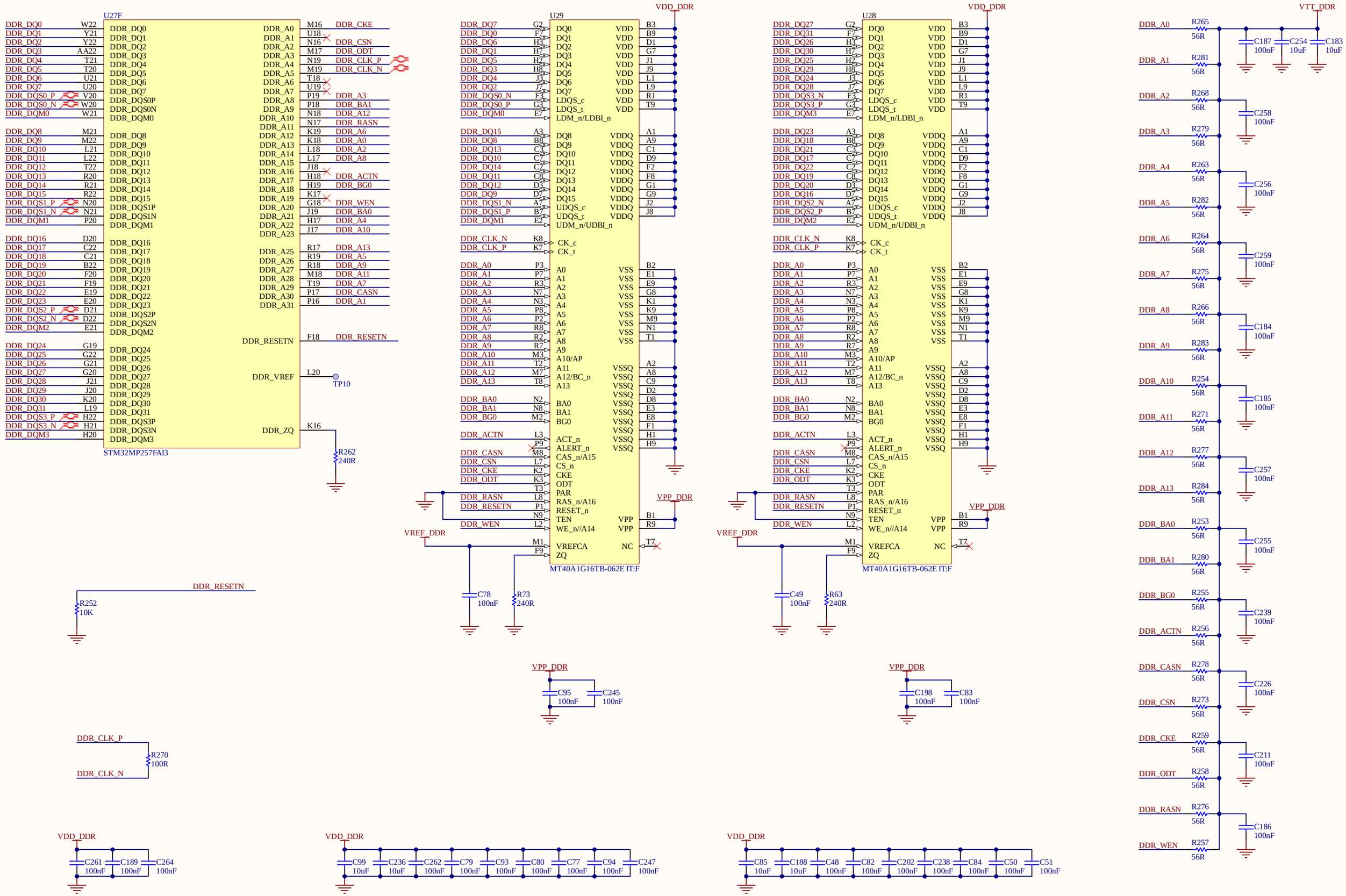

Title: **2 DDR4 16 bits**	
Project: **STM32MP257F-EV1**	
Variant: MP257F_X	
Revision: D-01	Reference: MB1936
Size: A3 Date: 16-MAY-24	Sheet: 6 of 18

RGMII ETH1

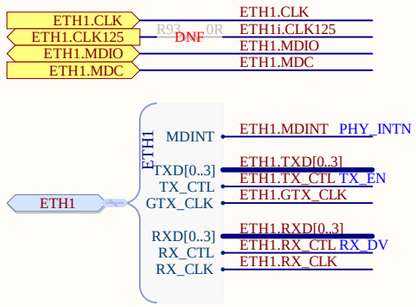

TXC / RXC : no 2ns delays
PHY Address :
AD[2:0] : 100 (0x04) default

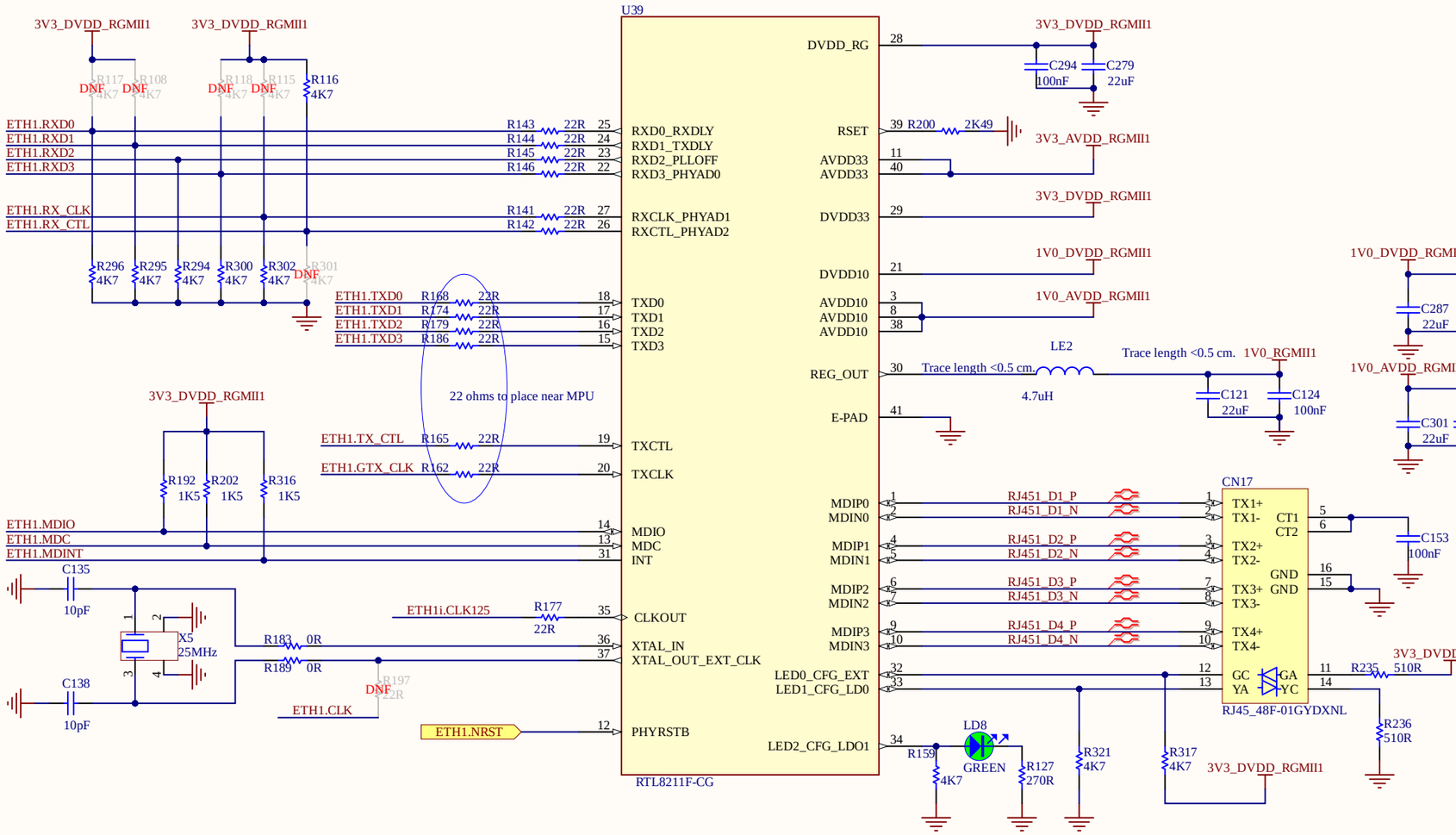

Title: **ETHERNET 1**			
Project: **STM32MP257F-EV1**			
Variant: MP257F_X			
Revision: D-01		Reference: MB1936	
Size: A3	Date: 16-MAY-24	Sheet: 7 of 18	

life.augmented

RGMII ETH2

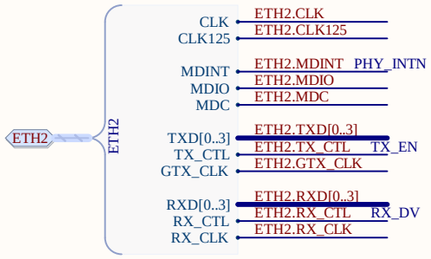

TXC / RXC : no 2ns delays
PHY Address :
AD[2:0] : 001 (0x01) default

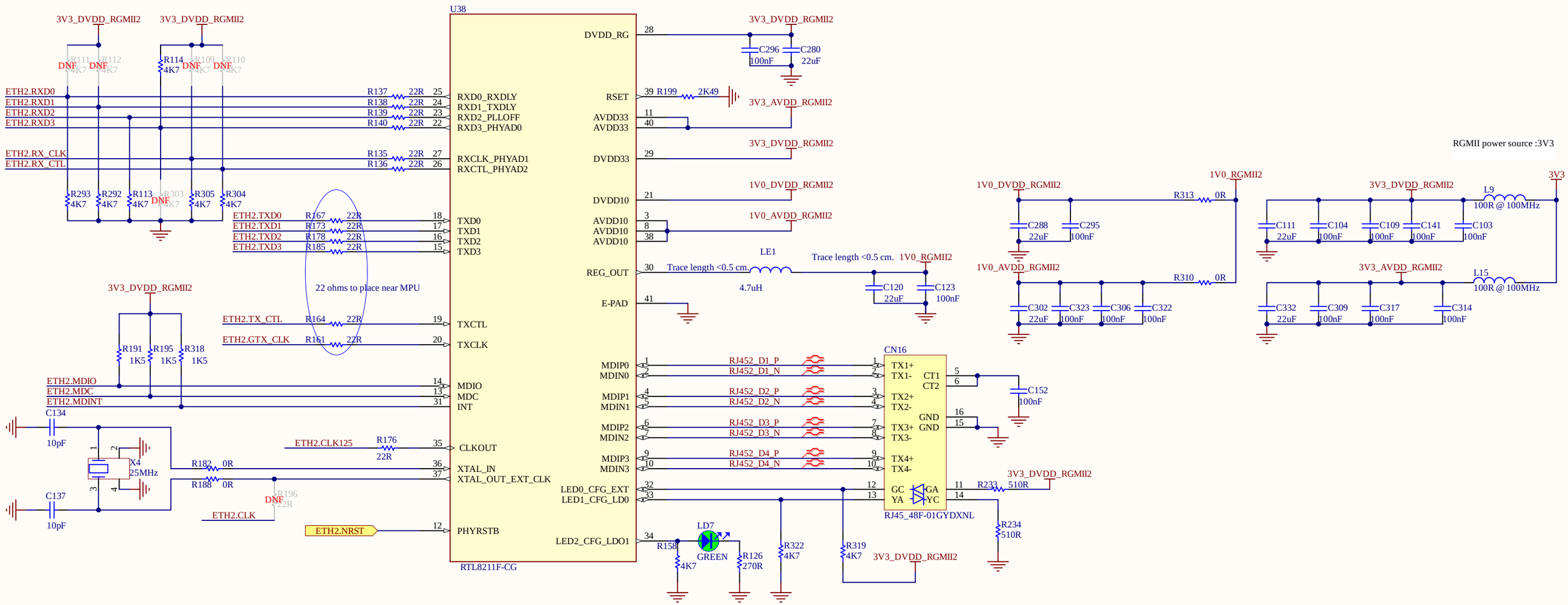

Title: **ETHERNET 2**		
Project: **STM32MP257F-EV1**		
Variant: MP257F_X		
Revision: D-01		Reference: MB1936
Size: A3	Date: 16-MAY-24	Sheet: 8 of 18

RGMII ETH3

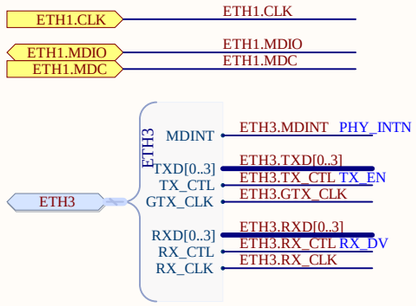

TXC / RXC : no 2ns delay
PHY Address :
AD[2:0] : 101 (0x05) default

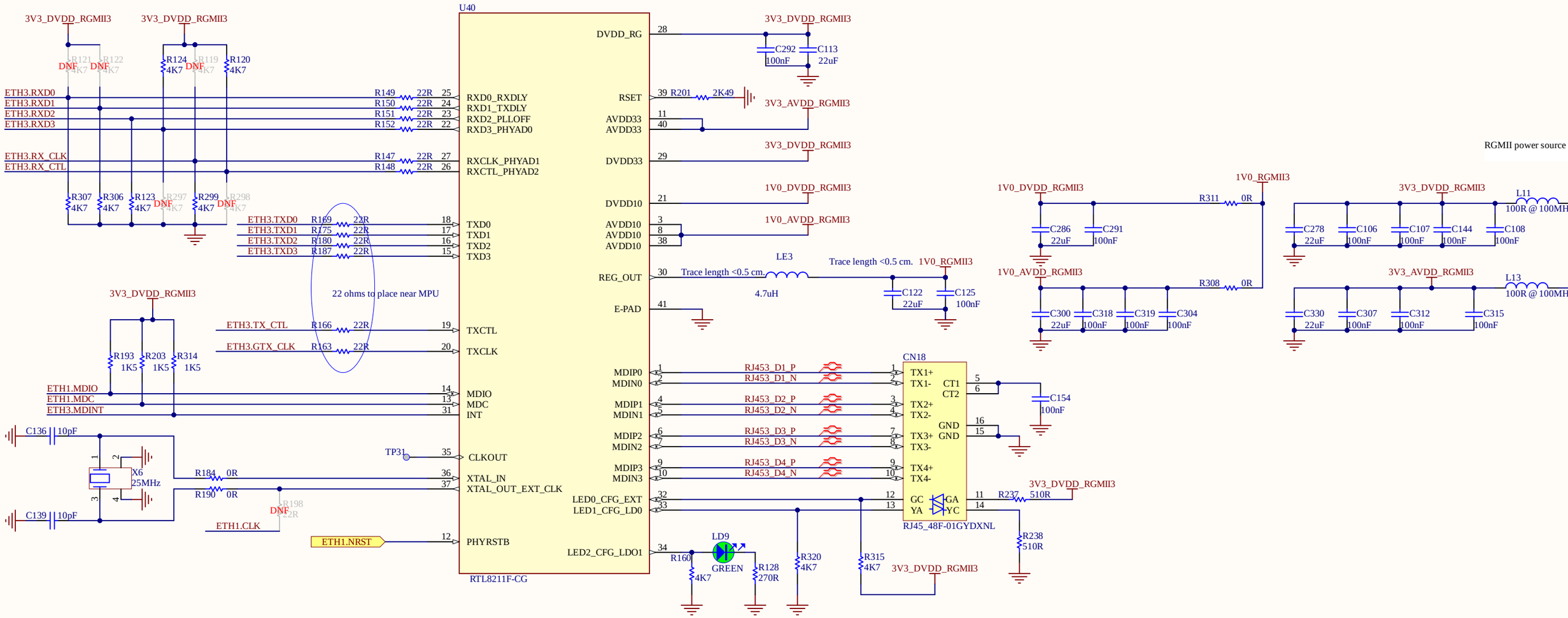

Title: **ETHERNET 3**			
Project: **STM32MP257F-EV1**			
Variant: MP257F_X			
Revision: D-01		Reference: MB1936	
Size: A3	Date: 16-MAY-24	Sheet: 9 of 18	

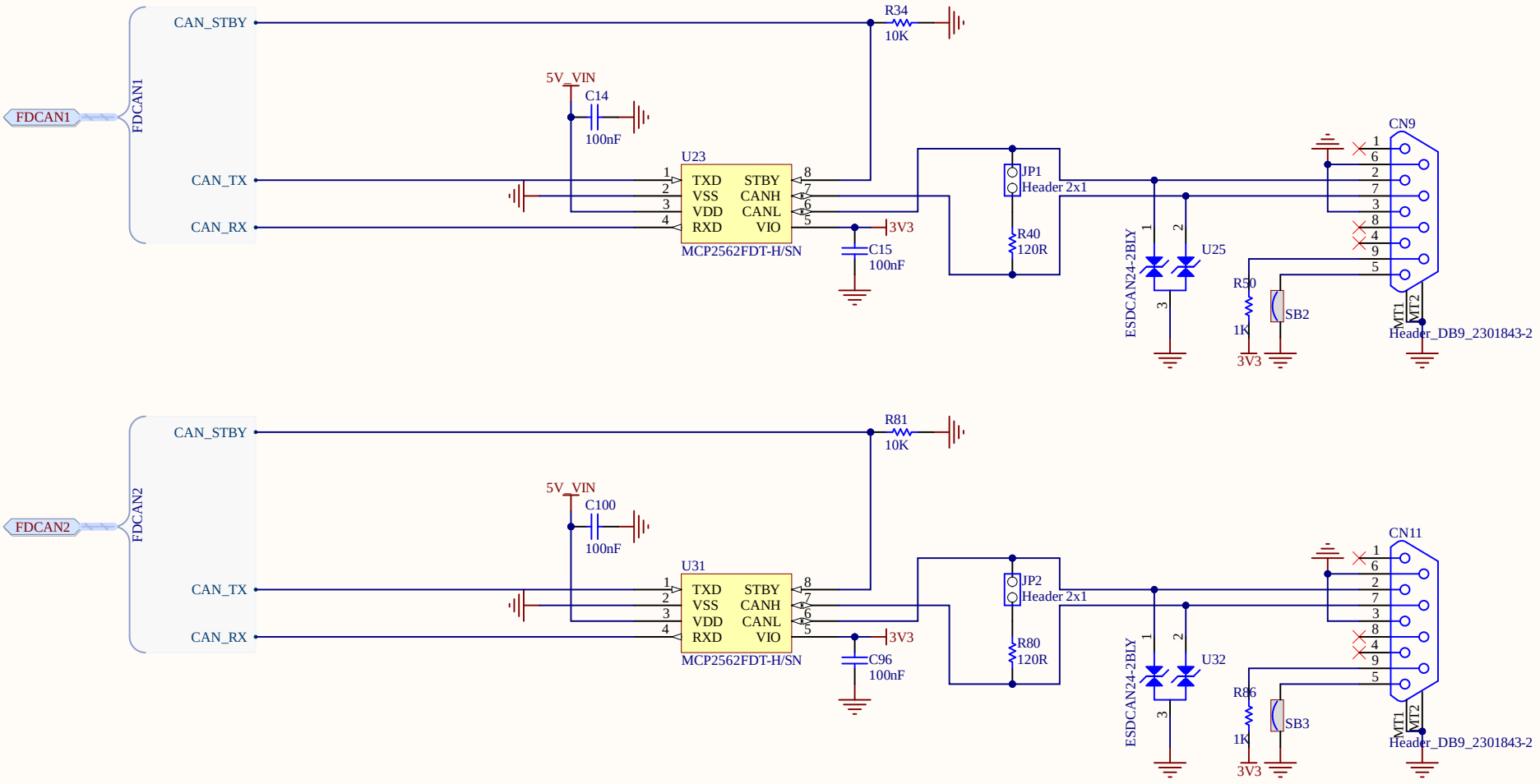

Title: **FDCAN**		
Project: **STM32MP257F-EV1**		
Variant: MP257F_X		
Revision: D-01		Reference: MB1936
Size: A4	Date: 16-MAY-24	Sheet: 10 of 18

life.augmented

PCIe

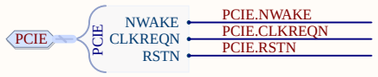

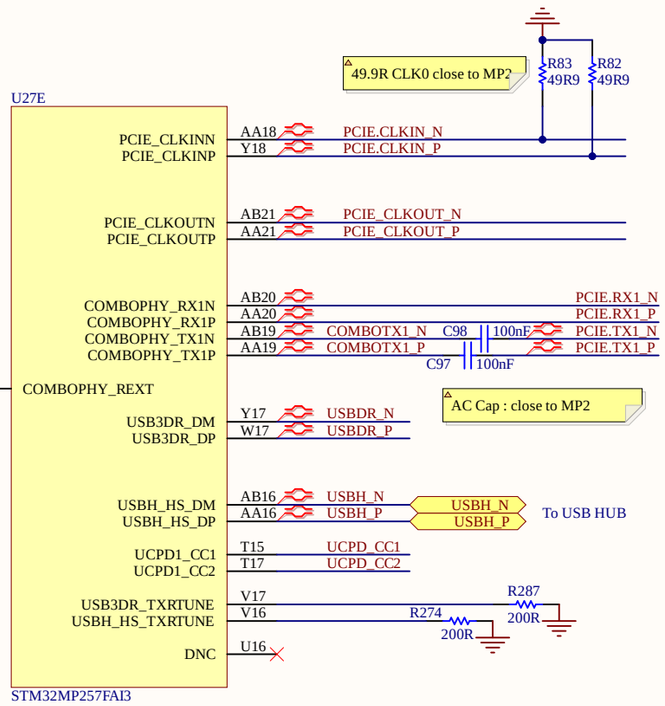

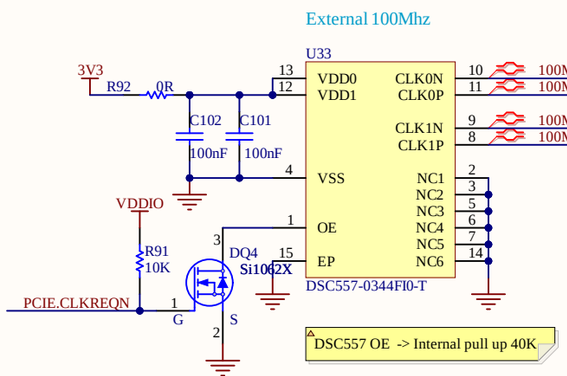

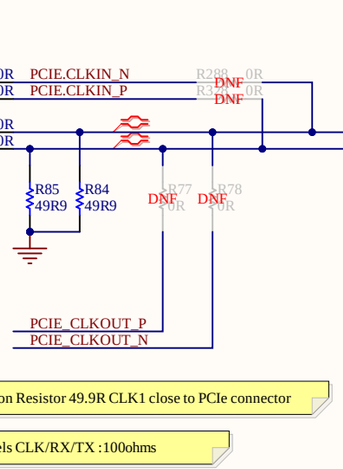

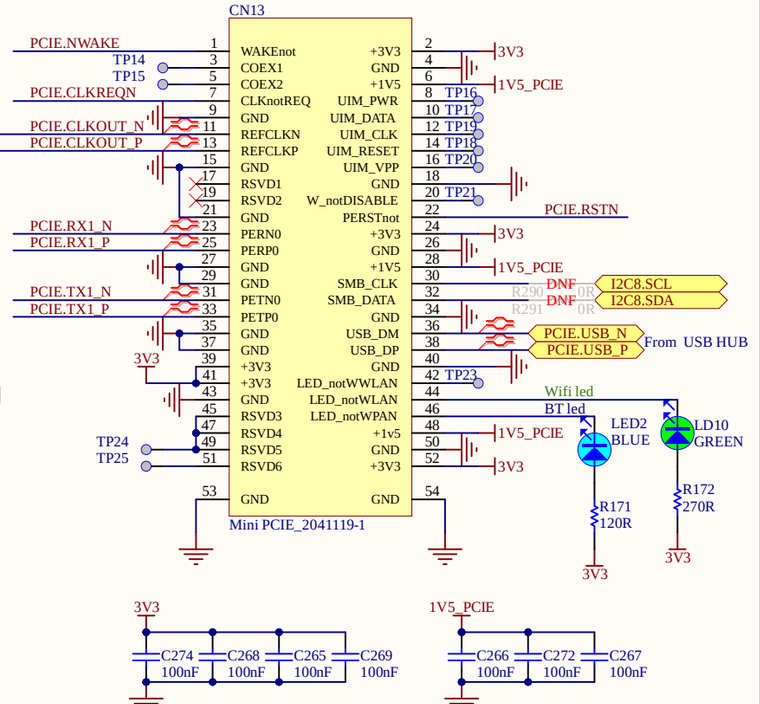

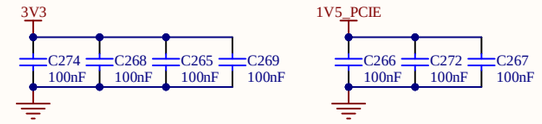

USB_DRD

Source/Sink(with sink current=0)

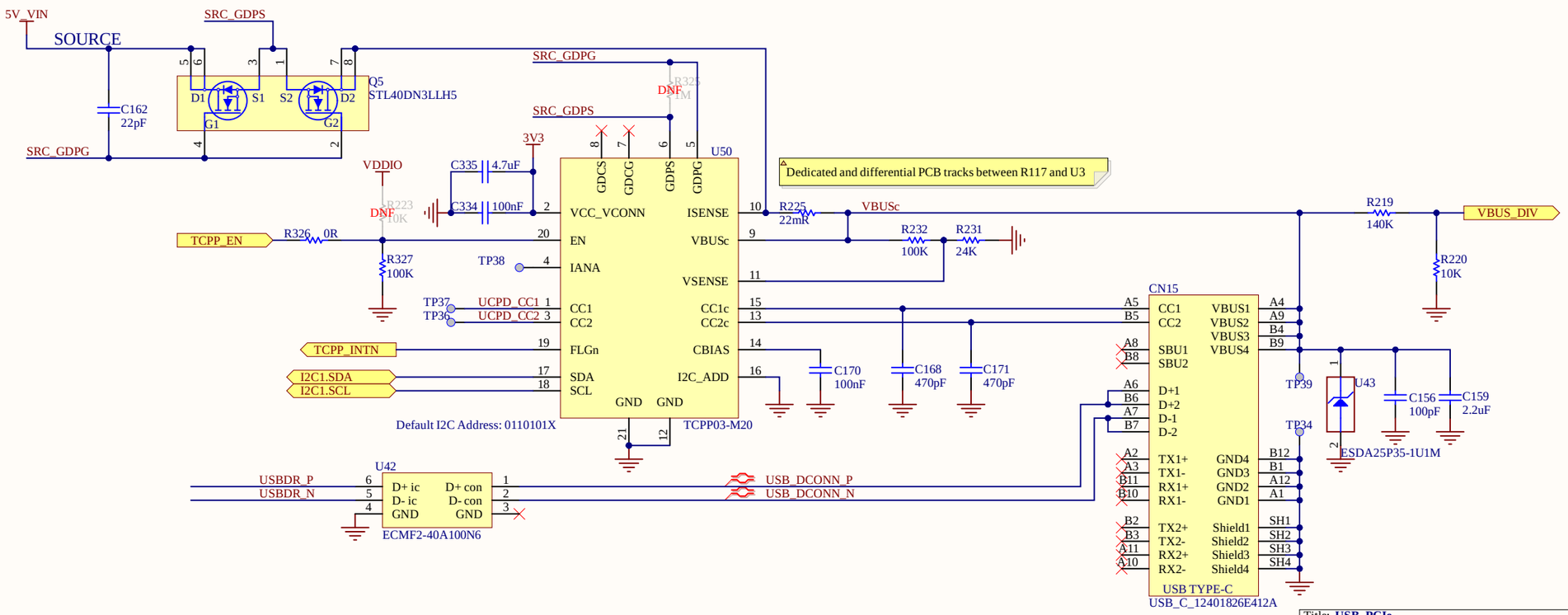

USB_HUB

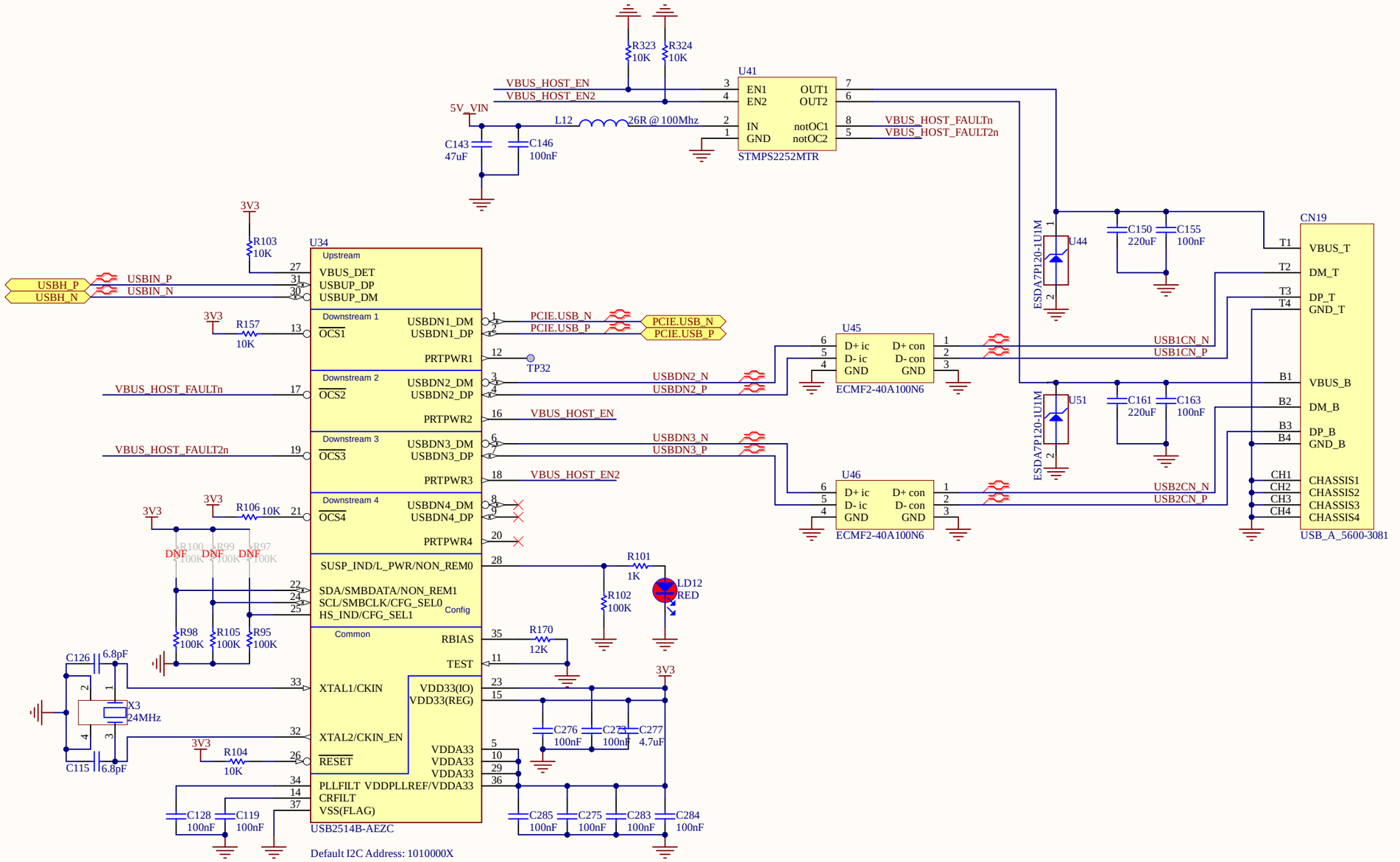

Title: **USB_HUB**		
Project: **STM32MP257F-EV1**		
Variant: MP257F_X		
Revision: D-01		Reference: MB1936
Size: A3	Date: 16-MAY-24	Sheet: 12 of 18

MICRO SD CARD

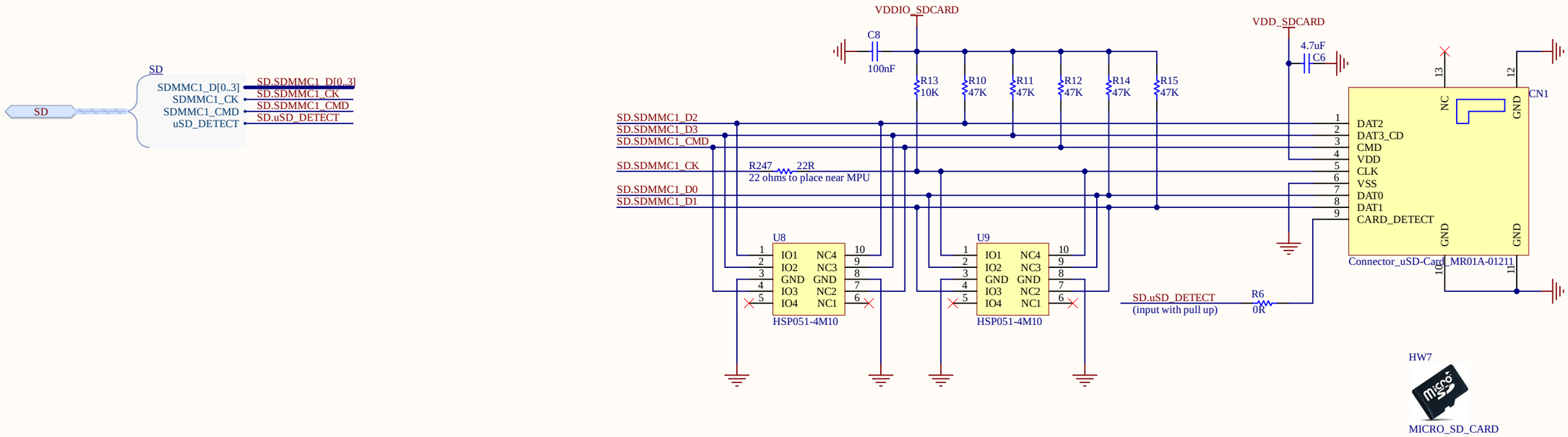

eMMC

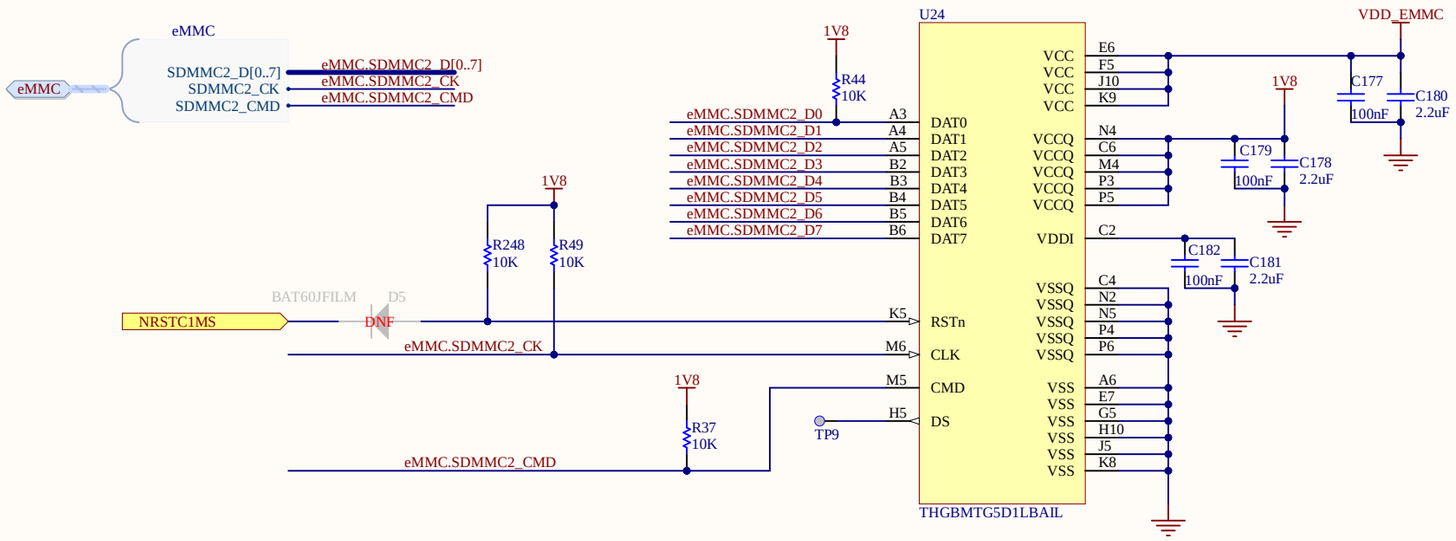

Title: **SDcard_eMMC**		
Project: **STM32MP257F-EV1**		
Variant: MP257F_X		
Revision: D-01		Reference: MB1936
Size: A3	Date: 16-MAY-24	Sheet: 13 of 18

life.augmented

Quad SPI Flash

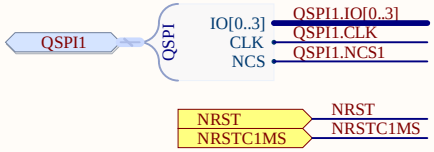

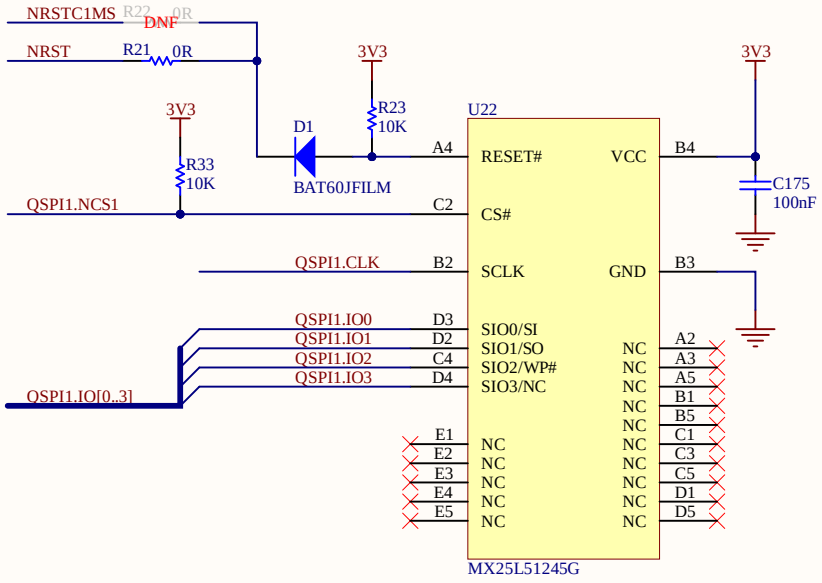

Title: **QSPI_NOR**			
Project: **STM32MP257F-EV1**			
Variant: MP257F_X			
Revision: D-01		Reference: MB1936	
Size: A4	Date: 16-MAY-24	Sheet: 14 of 18	

life.augmented

DSI - HDMI

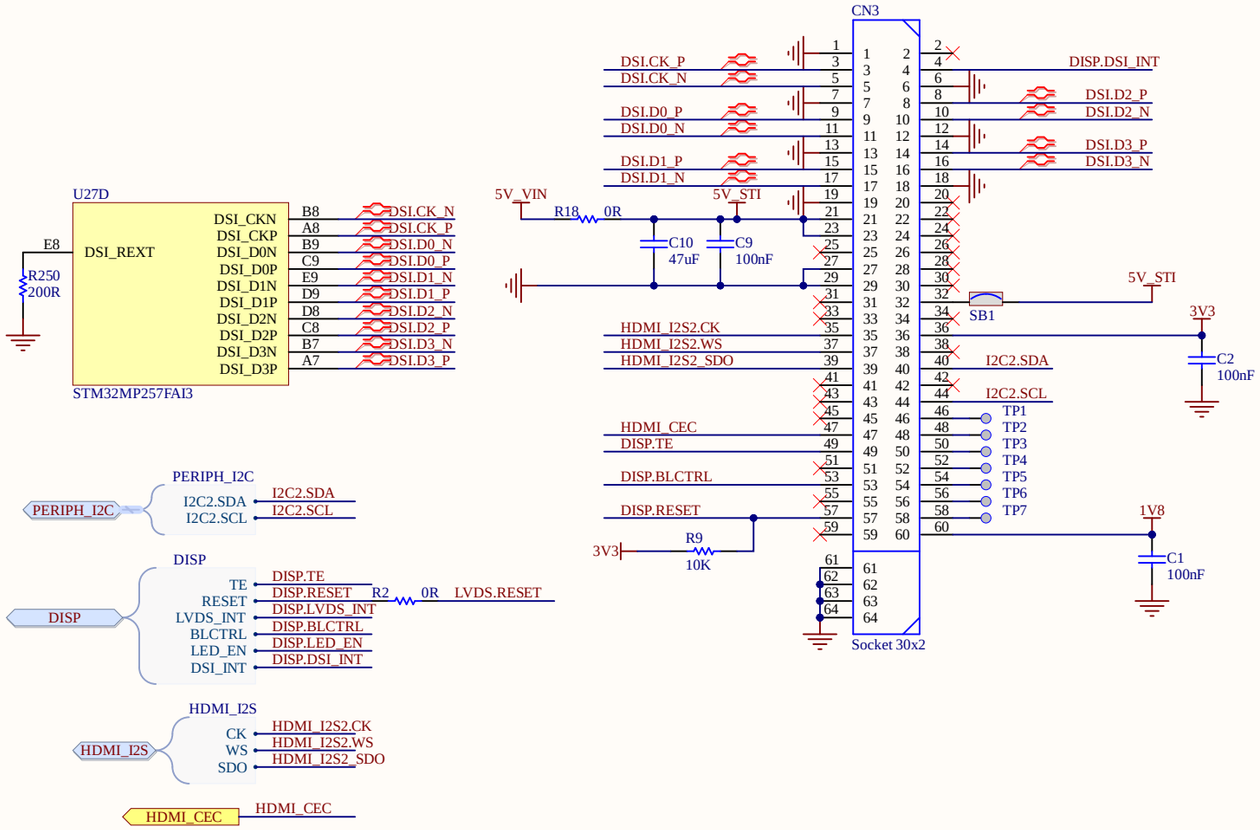

LVDS

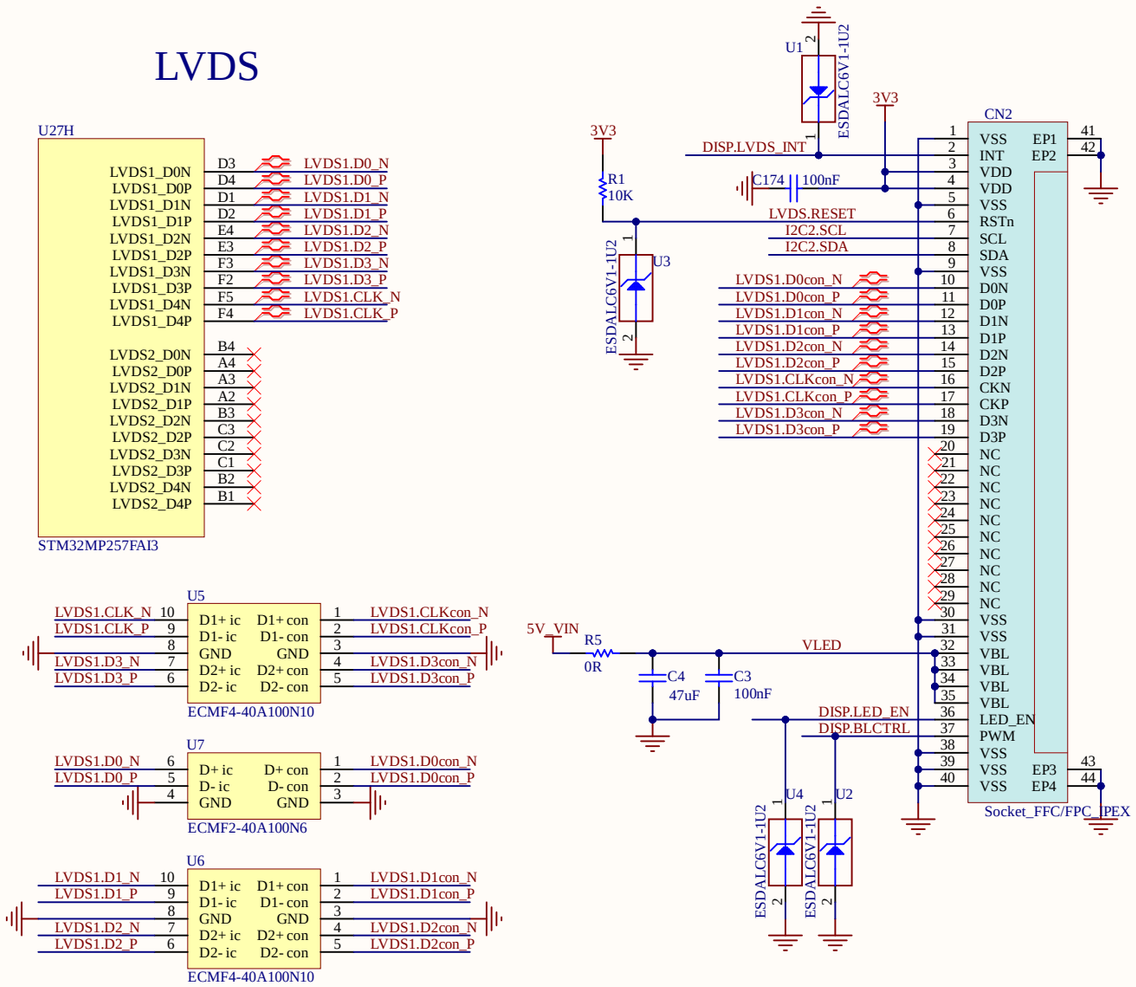

AI CAMERA

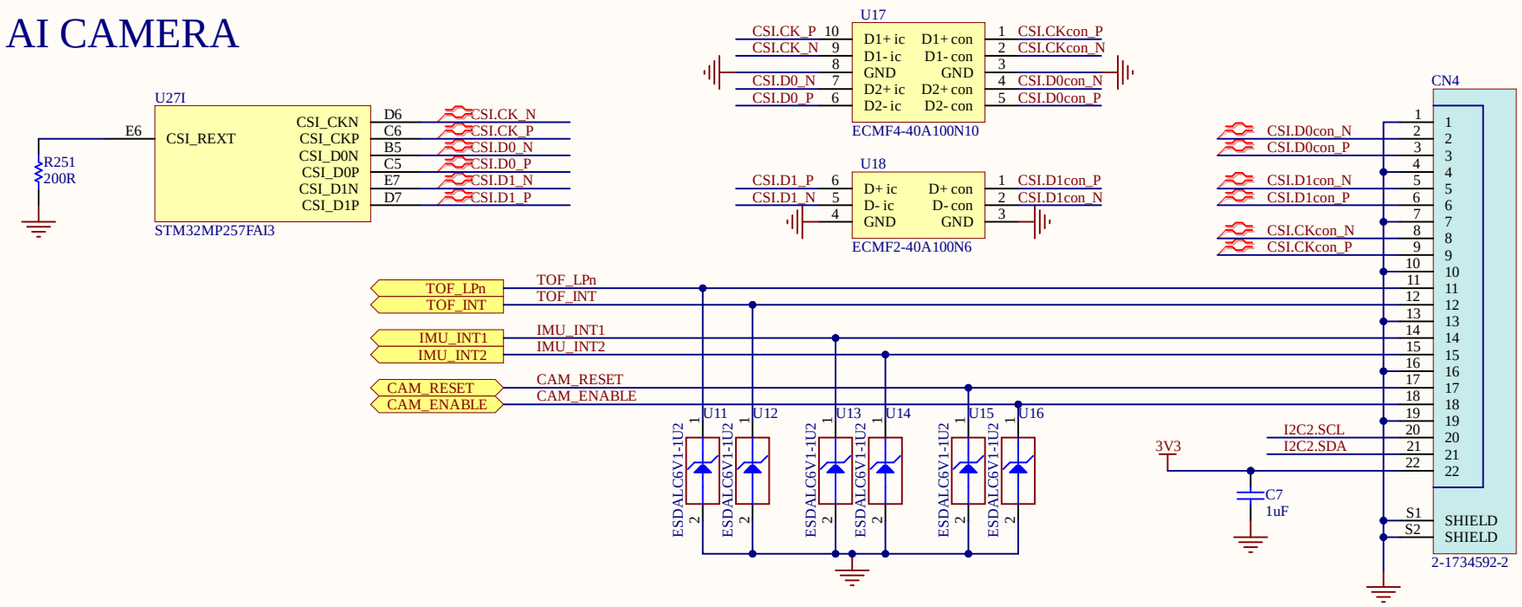

Title: **VIDEO**		
Project: **STM32MP257F-EV1**		
Variant: MP257F_X		
Revision: D-01		Reference: MB1936
Size: A3	Date: 16-MAY-24	Sheet: 15 of 18

life.augmented

mikroBUS connector

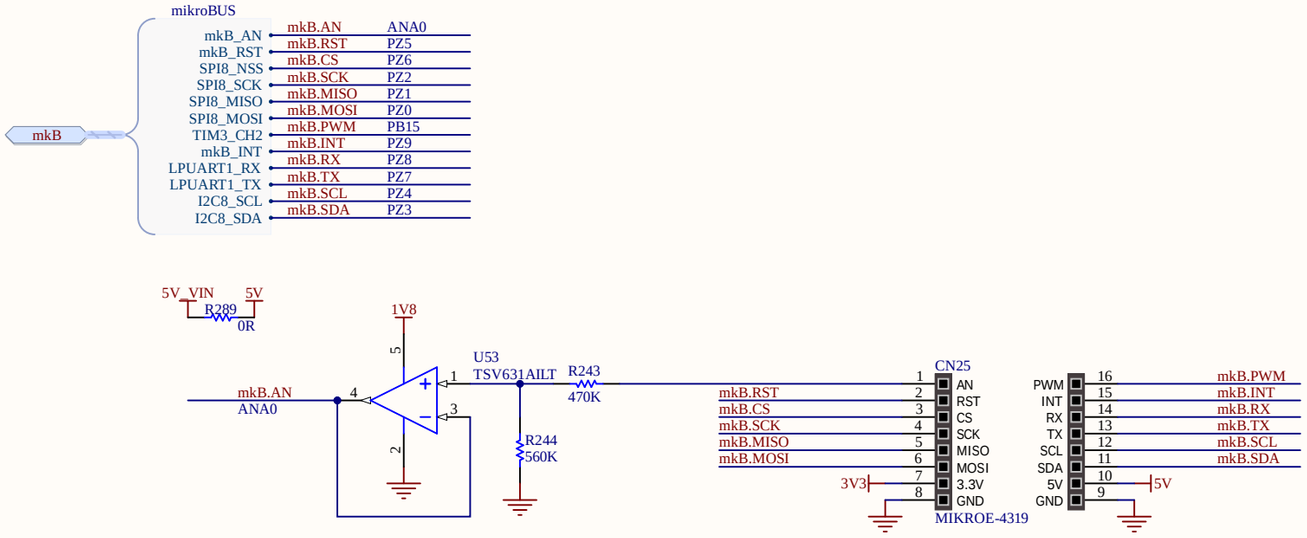

EXPANSION CONNECTOR

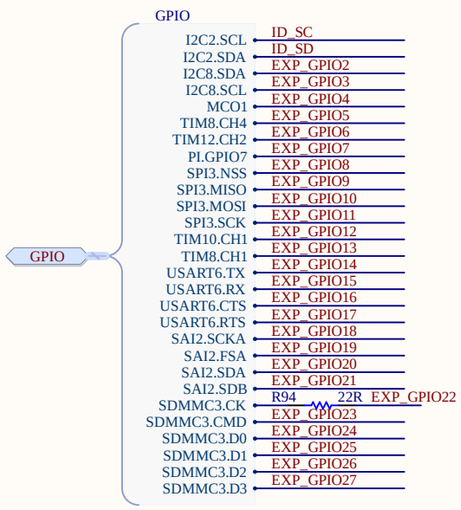

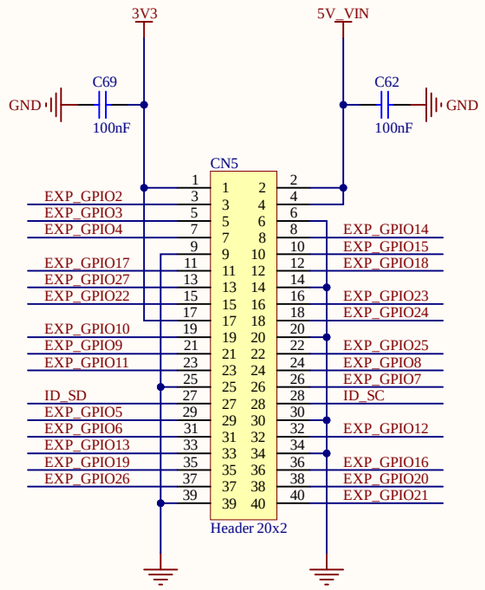

Title: **EXPANSION_&_mikroBUS_Connectors**		
Project: **STM32MP257F-EV1**		
Variant: MP257F_X		
Revision: D-01		Reference: MB1936
Size: A3	Date: 16-MAY-24	Sheet: 16 of 18

life.augmented

BUTTONS

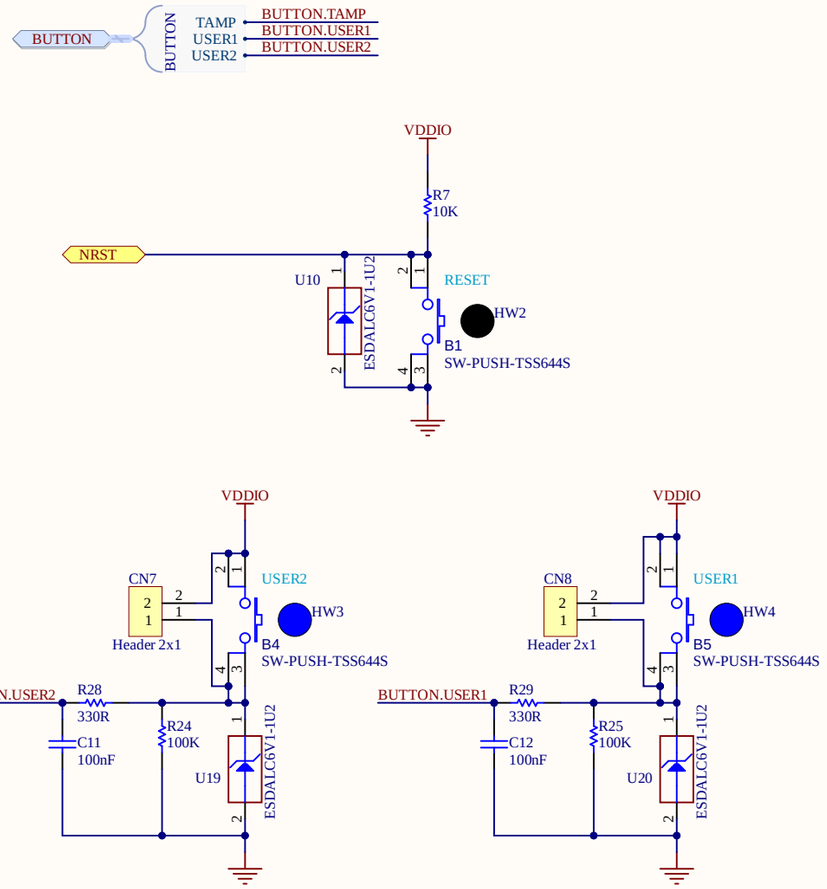

TAMPER

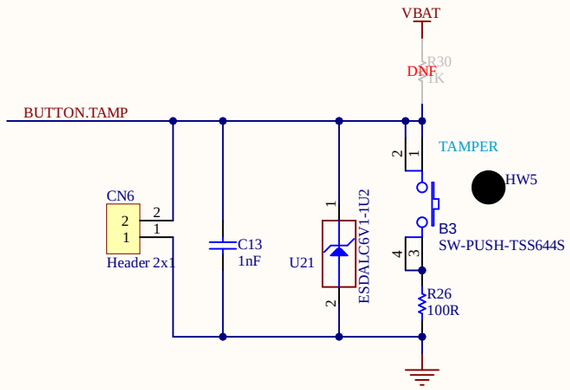

HW1302
BOARD CPN
Sticker product

HW1303
BOARD REF
Sticker board

BOOT MODE

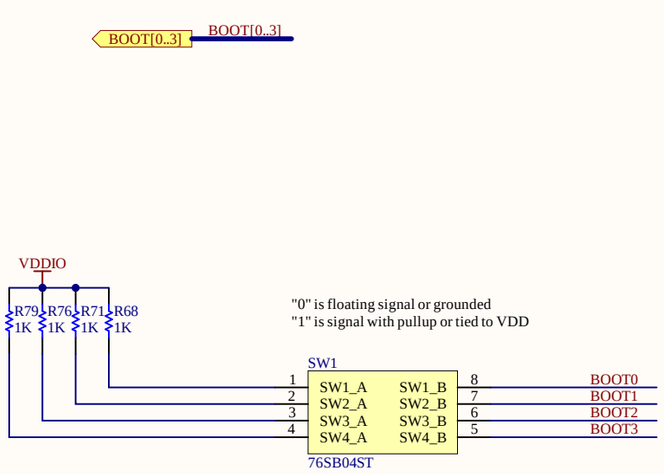

BOOT[3:0]	A35 master	M33 master
'b0000	UART/USB	UART/USB
'b0001	SD-Card	-
'b0010	eMMC	-
'b0011	Development	Development
'b0100	S-NOR	-
'b0101	-	-
'b0110	-	-
'b0111	-	SD-Card
'b1000	-	eMMC
'b1001	-	-
'b1010	-	-
'b1011	-	S-NOR
'b1100	Development	Development
'b1101	-	-
'b1110	-	-
'b1111	UART/USB	UART/USB

BOOT Sources : Simplified Table
For the complete Table : refer to datasheet

LED

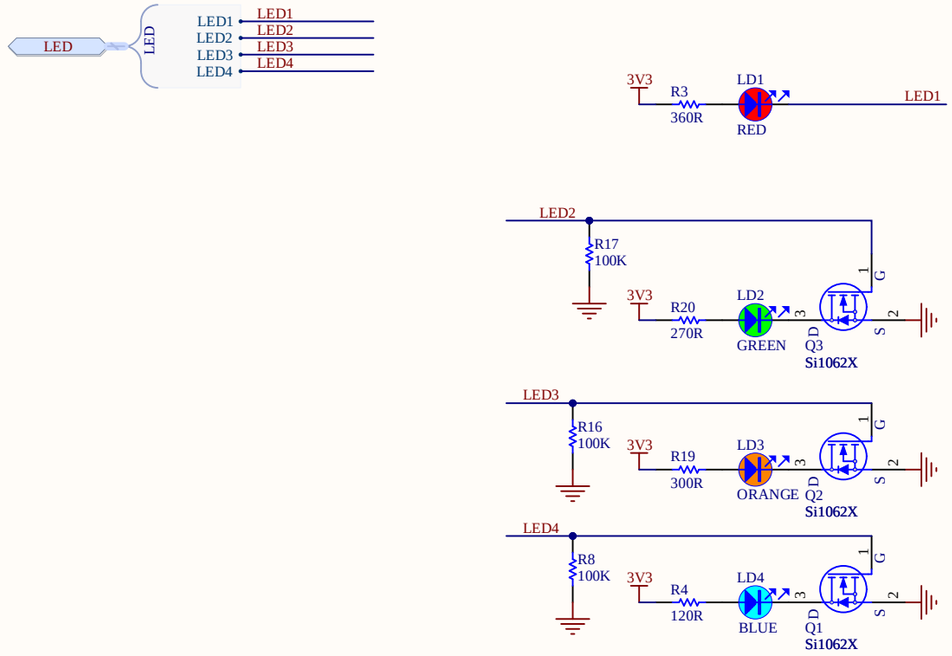

Title: **Peripherals**		
Project: **STM32MP257F-EV1**		
Variant: MP257F_X		
Revision: D-01		Reference: MB1936
Size: A3	Date: 16-MAY-24	Sheet: 17 of 18

STLINK-V3EC

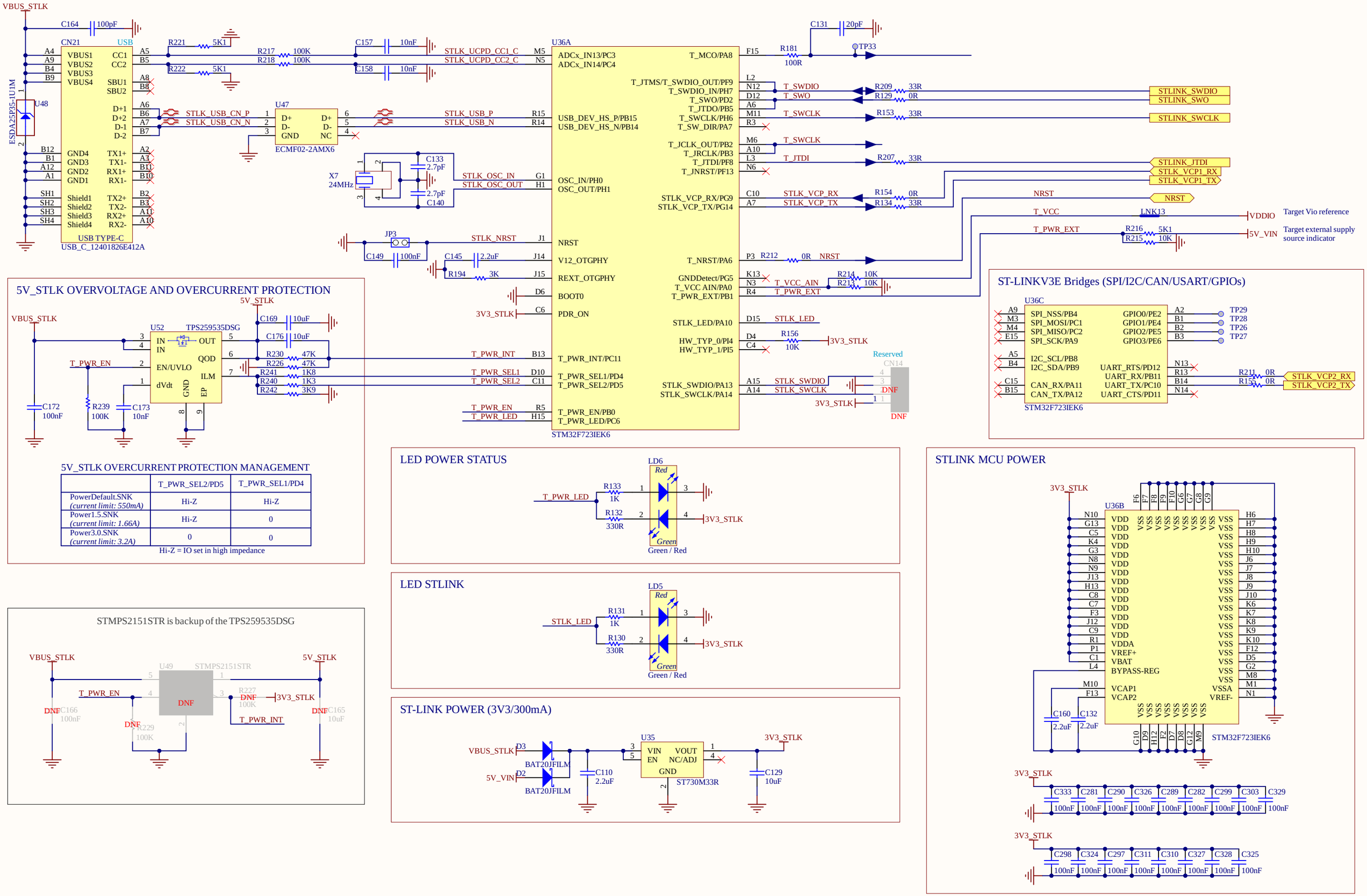

5V_STLK OVERVOLTAGE AND OVERCURRENT PROTECTION

5V_STLK OVERCURRENT PROTECTION MANAGEMENT

	T_PWR_SEL2/PD5	T_PWR_SEL1/PD4
PowerDefault.SNK *(current limit: 550mA)*	Hi-Z	Hi-Z
Power1.5.SNK *(current limit: 1.66A)*	Hi-Z	0
Power3.0.SNK *(current limit: 3.2A)*	0	0

Hi-Z = IO set in high impedance

STMPS2151STR is backup of the TPS259535DSG

LED POWER STATUS

LED STLINK

ST-LINK POWER (3V3/300mA)

ST-LINKV3E Bridges (SPI/I2C/CAN/USART/GPIOs)

STLINK MCU POWER

Title: **STLINK-V3EC**		
Project: **STM32MP257F-EV1**		
Variant: MP257F_X		
Revision: D-01		Reference: MB1936
Size: A3	Date: 16-MAY-24	Sheet: 18 of 18

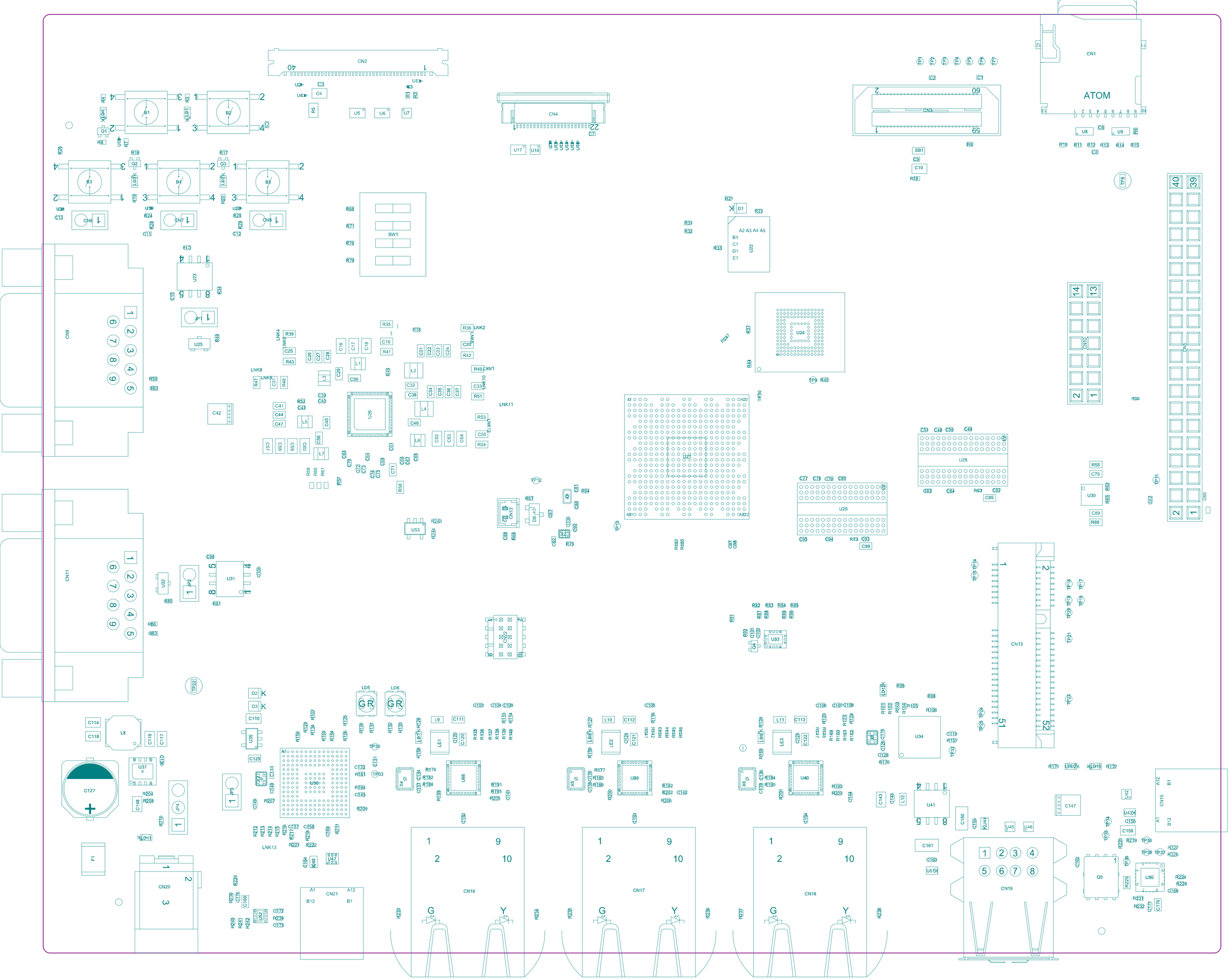

Project: STM32MP257F-EV1	
Layer: M14-Top Assembly	Gerber: .GM14
Variant: MP257F_X	Ref: MB1936
Date: 16-MAY-24	Rev: D

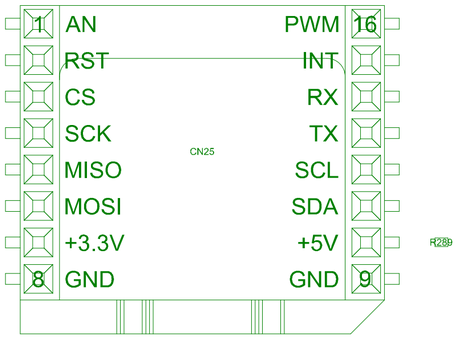

Project: STM32MP257F-EV1	
Layer: M15-Bottom Assembly	Gerber:.GM15
Variant: MP257F_X	Ref: MB1936
Date: 16-MAY-24	Rev: D

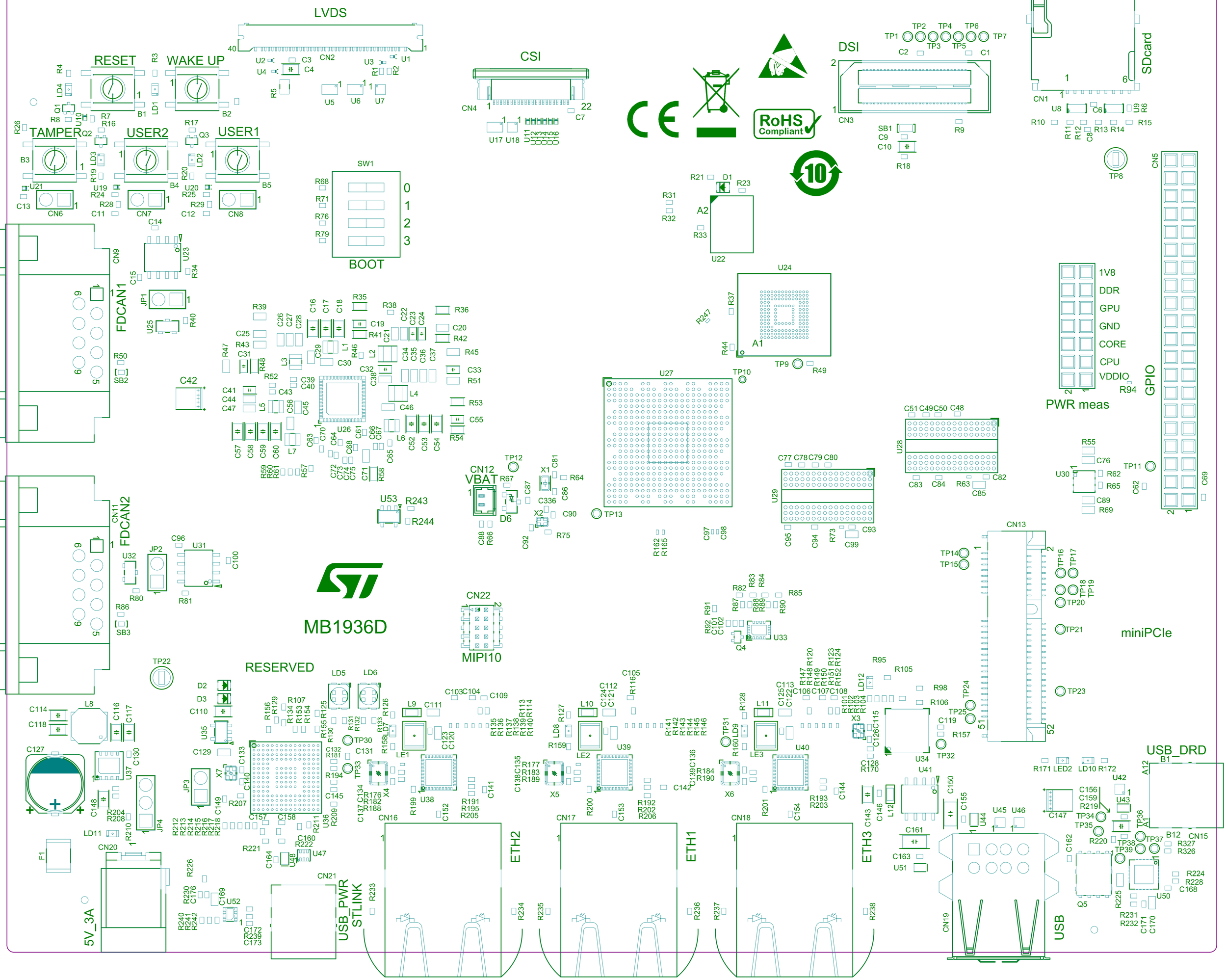
LVDS
CSI
DSI
SDcard
RESET
WAKE UP
TAMPER
USER2
USER1
BOOT
SW1
FDCAN1
FDCAN2
RESERVED
MB1936D
MIPI10
CN12
VBAT
CN22
CN16
CN17
CN18
ETH2
ETH1
ETH3
USB_PWR
STLINK
5V_3A
USB
miniPCIe
USB_DRD
GPIO
PWR meas
1V8
DDR
GPU
GND
CORE
CPU
VDDIO
RoHS
Compliant
Top Overlay
.GTO

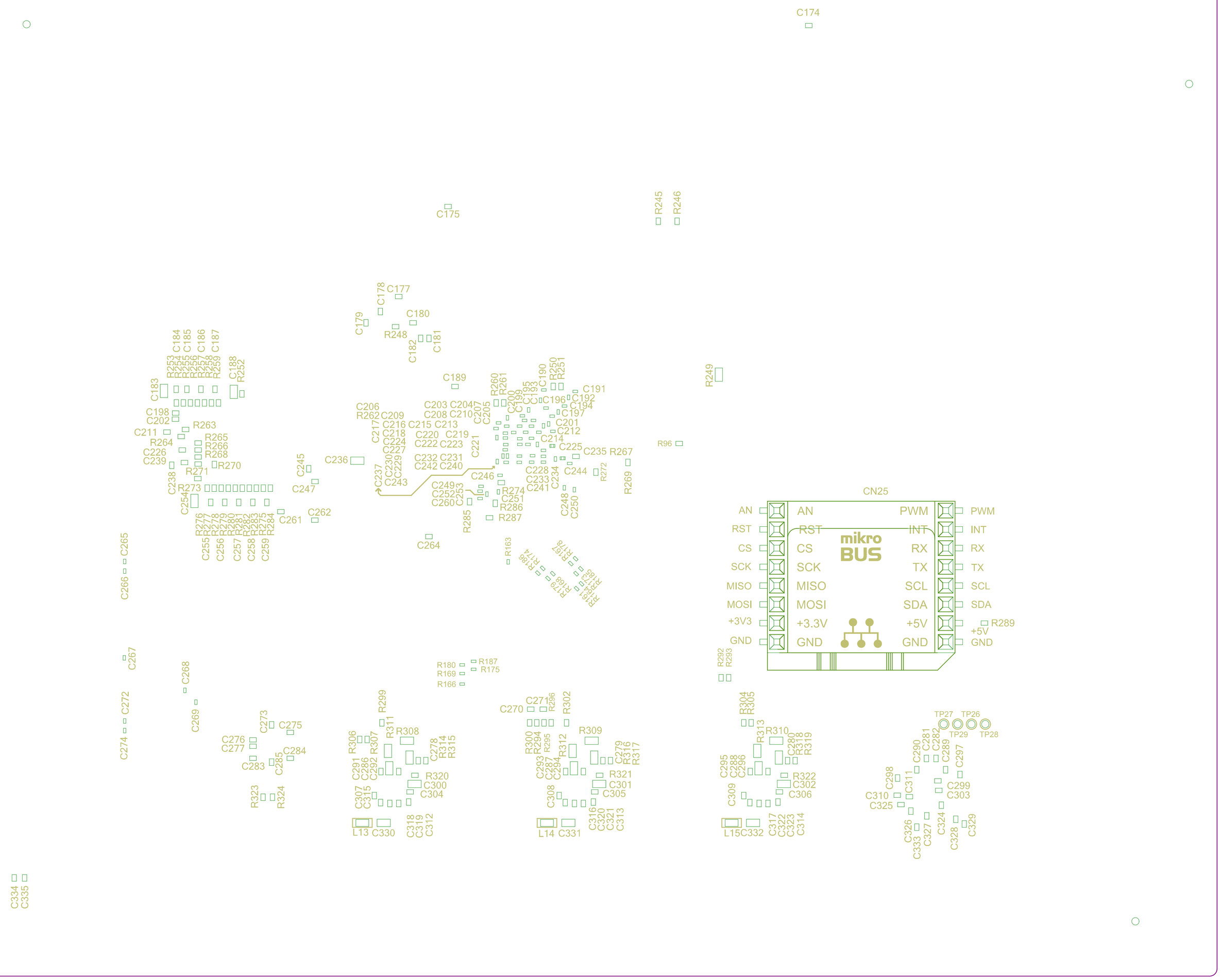

Bottom Overlay .GBO