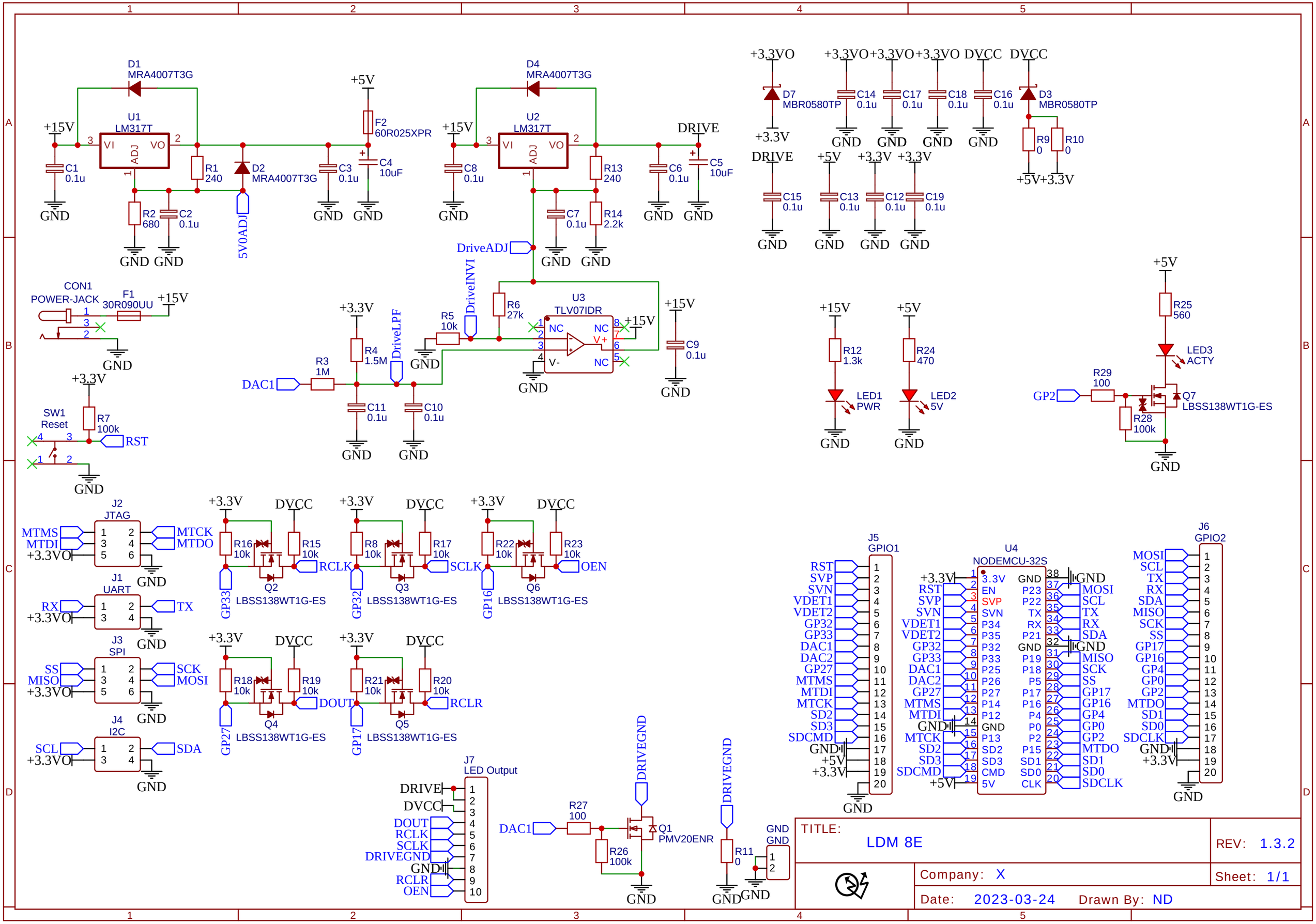
D1 MRA4007T3G
U1 LM317T
+15V
C1 0.1u
R1 240
R2 680
C2 0.1u
D2 MRA4007T3G
5V0ADJ
C3 0.1u
+5V
F2 60R025XPR
C4 10uF
GND
D4 MRA4007T3G
U2 LM317T
C8 0.1u
R13 240
C7 0.1u
R14 2.2k
C6 0.1u
DRIVE
C5 10uF
DriveADJ
DriveINVI
R6 27k
R5 10k
U3 TLV07IDR
NC
V+
V-
C9 0.1u
CON1 POWER-JACK
F1 30R090UU
+3.3V
R4 1.5M
DriveLPF
R3 1M
DAC1
C11 0.1u
C10 0.1u
SW1 Reset
R7 100k
RST
+3.3VO
D7 MBR0580TP
C14 0.1u
C17 0.1u
C18 0.1u
C16 0.1u
DVCC
D3 MBR0580TP
R9 0
R10 0
C15 0.1u
C13 0.1u
C12 0.1u
C19 0.1u
R12 1.3k
LED1 PWR
R24 470
LED2 5V
R25 560
LED3 ACTY
GP2
R29 100
Q7 LBSS138WT1G-ES
R28 100k
J2 JTAG
MTMS
MTDI
MTCK
MTDO
J1 UART
RX
TX
J3 SPI
SS
MISO
SCK
MOSI
J4 I2C
SCL
SDA
R16 10k
R15 10k
R8 10k
R17 10k
R22 10k
R23 10k
RCLK
SCLK
OEN
Q2 LBSS138WT1G-ES
Q3 LBSS138WT1G-ES
Q6 LBSS138WT1G-ES
GP33
GP32
GP16
R18 10k
R19 10k
R21 10k
R20 10k
DOUT
RCLR
Q4 LBSS138WT1G-ES
Q5 LBSS138WT1G-ES
GP27
GP17
J7 LED Output
DRIVE
DVCC
DRIVEGND
R27 100
R26 100k
Q1 PMV20ENR
R11 0
J5 GPIO1
U4 NODEMCU-32S
J6 GPIO2
TITLE:
LDM 8E
REV: 1.3.2
Company: X
Sheet: 1/1
Date: 2023-03-24
Drawn By: ND