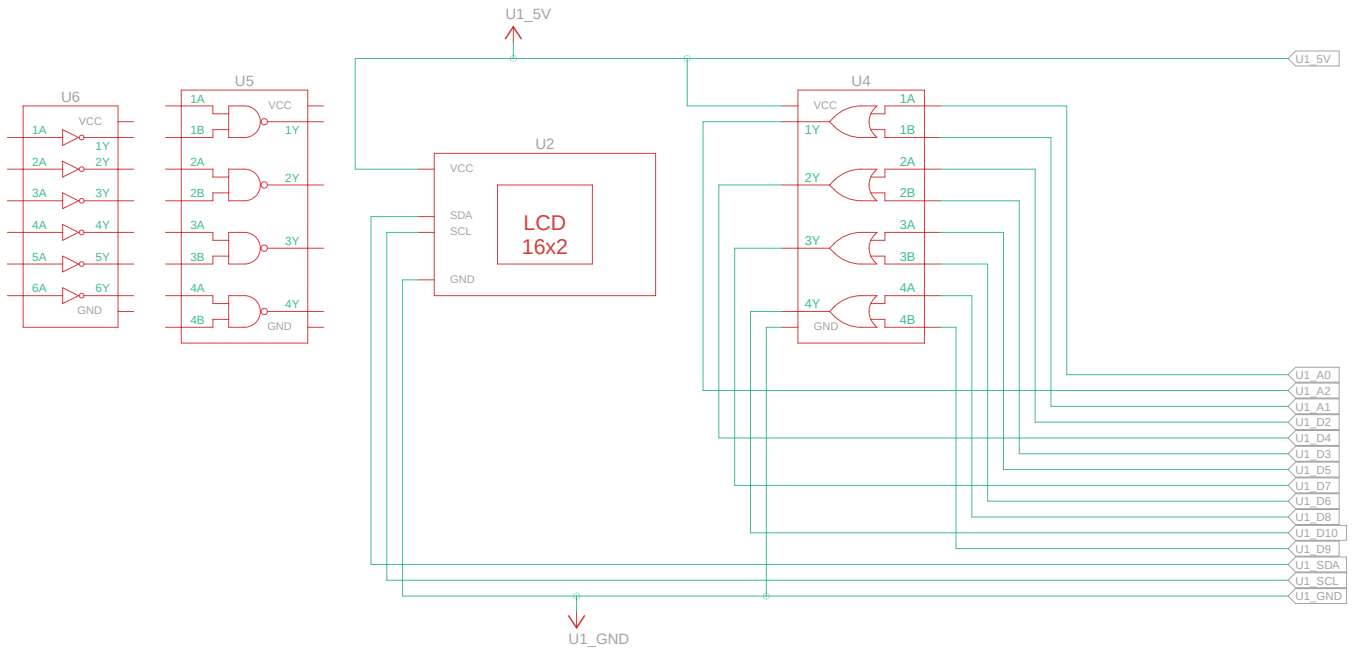

Made with Tinkercad®

Title: IC TESTER

Date: 8/31/2024, 5:57:54 AM

Sheet: 1/2

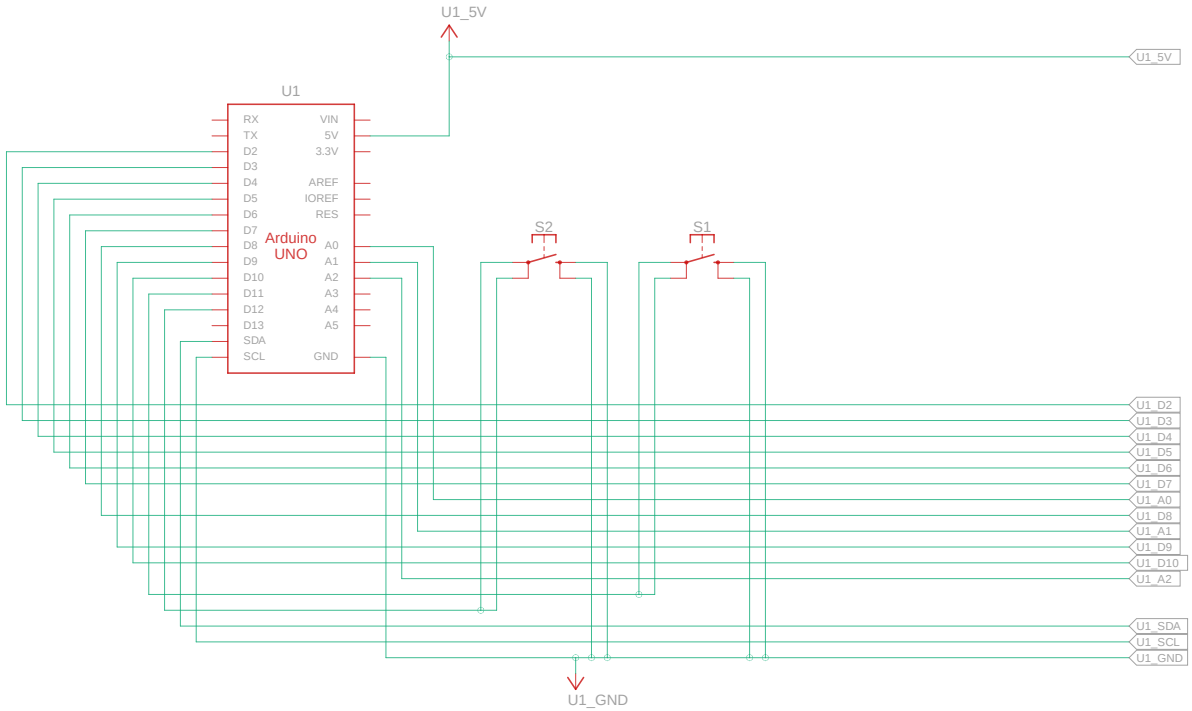

Made with Tinkercad®

Title: IC TESTER	
Date: 8/31/2024, 5:57:54 AM	Sheet: 2/2