DESCRIPTION: FIXTURE, CMS2 ETL, AL-N BASEPLATE HOLDING BASE FIXTURE1
PROJECT: CMS_Phase_2
CATEGORY: PLATE

REV	REVISION CONTROL DOCUMENT	DATES	SIGNATURES	
-	F10129572---RCD		DRAWN	
			APPROVED	

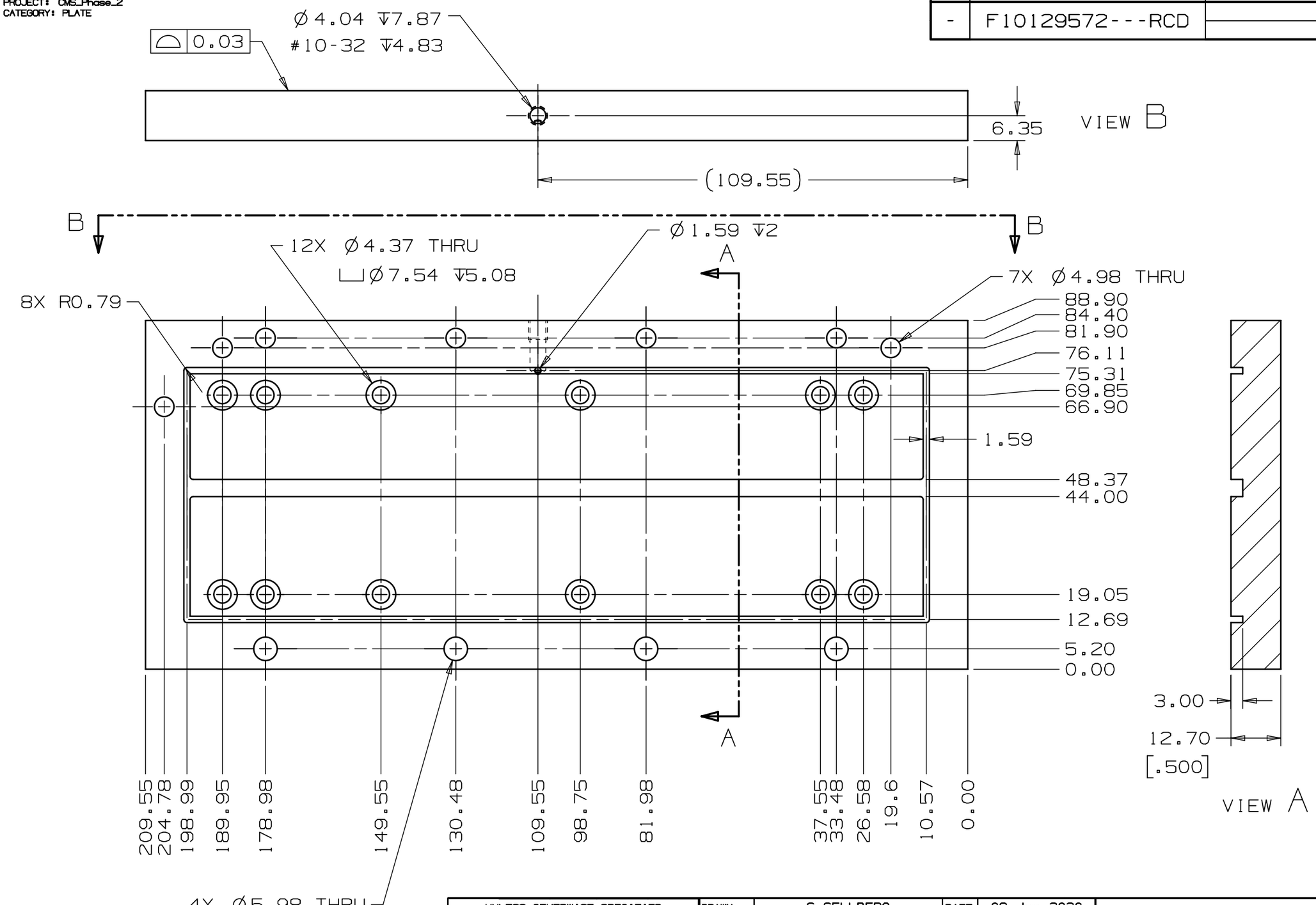

NOTES:
1. Ø4.98 holes are light press fit for M5 Dowel pins
2. Ø5.98 holes are light press fit for M6 Dowel pins

UNLESS OTHERWISE SPECIFIED				
±X	±X.X	±X.XX	±X/X	±X°
---	0.3	0.12	---	---

BREAK ALL SHARP EDGES, MAX: 0.3
DO NOT SCALE DRAWING
DIMENSIONS BASED ON: ASME Y14.5M-1994
MAX MACHINE ALL SURFACES: 3.2√
DRAWING UNITS: MM

THIRD ANGLE PROJECTION

DRAWN	S.SELLBERG	DATE	08-Jan-2020
CHECKED		DATE	
APPROVED		DATE	

USED ON: F10129336

MATERIAL: MIC6, ALUMINUM TOOLING PLATE

GROUP: Particle Physics Mechanical Support | CAGE CODE: 0U5R6

FERMI NATIONAL ACCELERATOR LABORATORY
UNITED STATES DEPARTMENT OF ENERGY

NAME: FIXTURE, CMS2 ETL, AL-N BASEPLATE HOLDING BASE FIXTURE1

SCALE	SIZE	DRAWING NUMBER	SHEET	REV
1:1	A3	F10129572	1 OF 4	-

TEMPLATE VERSION: 2018.12.03