Zorro_Bus

File: zorro_bus.kicad_sch

MP3_ADC

File: mp3_adc_sch.kicad_sch

FPGA_RAM

File: untitled.kicad_sch

Drawn by O. Achten

OA Design

Sheet: /

File: Z2_Audio_AmiGUS.kicad_sch

Title: AmiGUS Main Schematics

Size: A5	Date: 2025-01-30	**Rev: 1.3**
KiCad E.D.A. 8.0.8		Id: 1/4

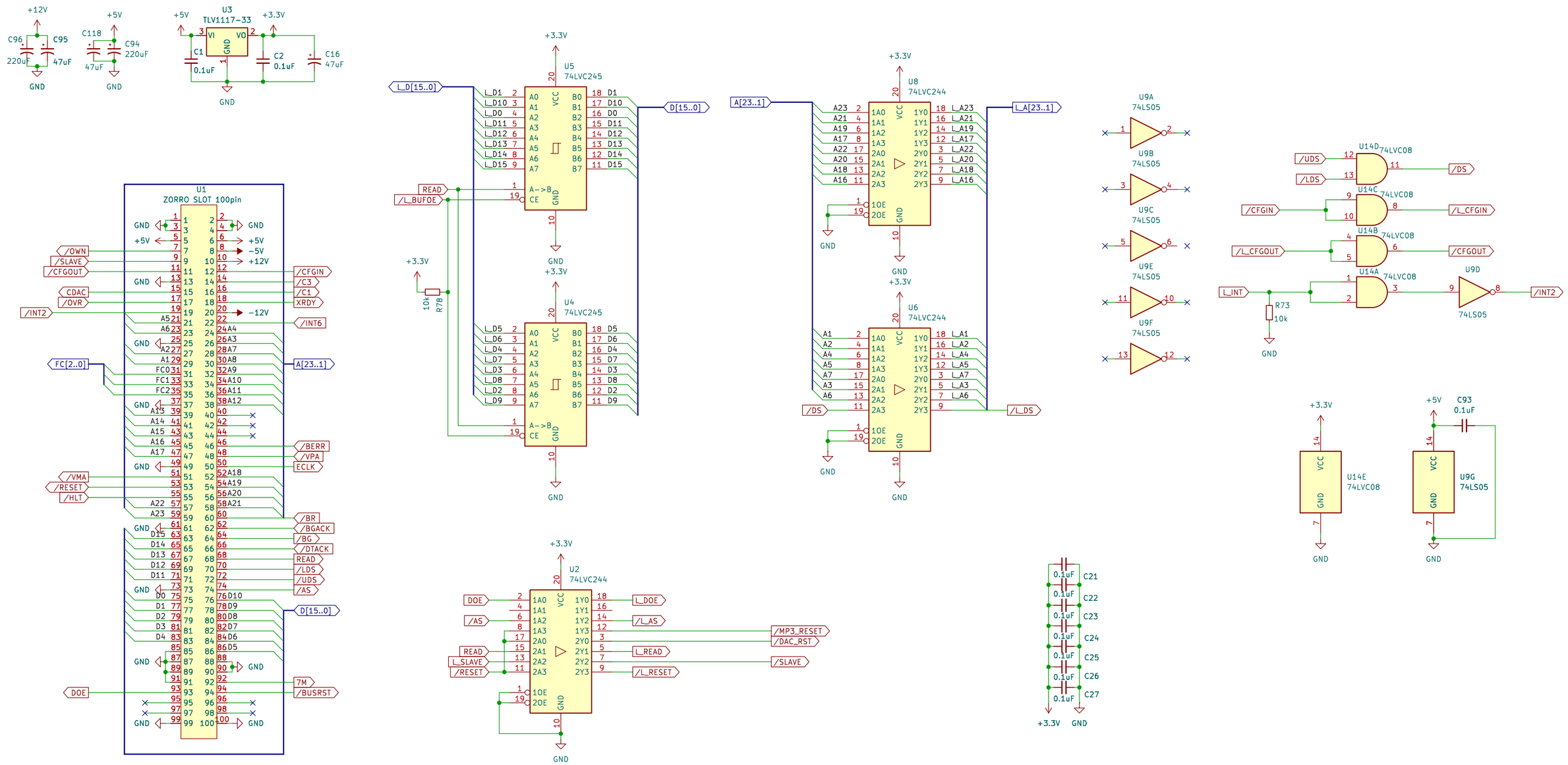

Drawn by Oliver Achten
OA Design

Sheet: /Zorro_Bus/
File: zorro_bus.kicad_sch

Title: Zorro II Bus & Support Logic

Size: A3	Date: 2025-01-30	**Rev: V1.3**
KiCad E.D.A. 8.0.8		Id: 2/4

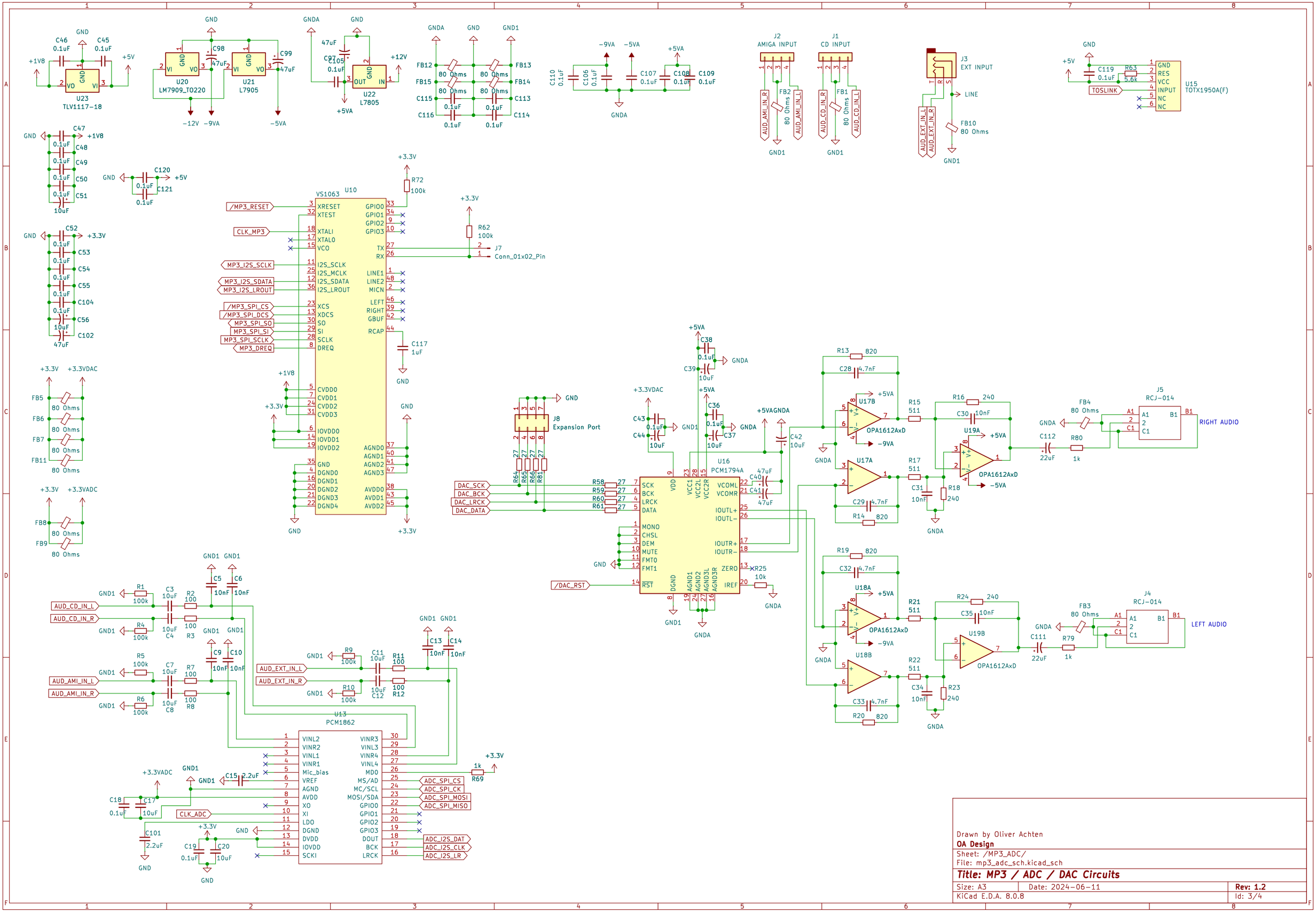

Drawn by Oliver Achten
OA Design
Sheet: /MP3_ADC/
File: mp3_adc_sch.kicad_sch

Title: MP3 / ADC / DAC Circuits

Size: A3	Date: 2024-06-11	**Rev: 1.2**
KiCad E.D.A. 8.0.8		Id: 3/4

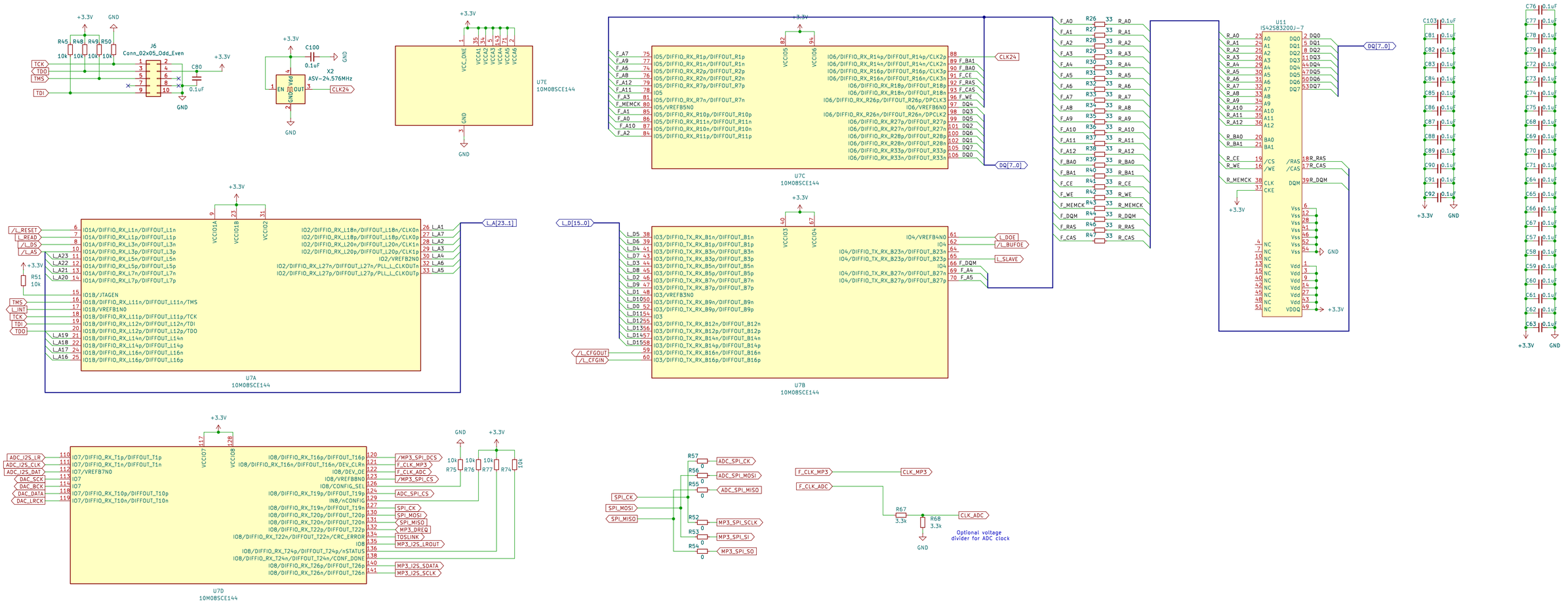

Drawn by Oliver Achten
OA Design
Sheet: /FPGA_RAM/
File: untitled.kicad_sch

Title: FPGA, SDRAM and Signal Pathways

Size: A2	Date: 2024-06-11	**Rev: V1.2**
KiCad E.D.A. 8.0.8		Id: 4/4