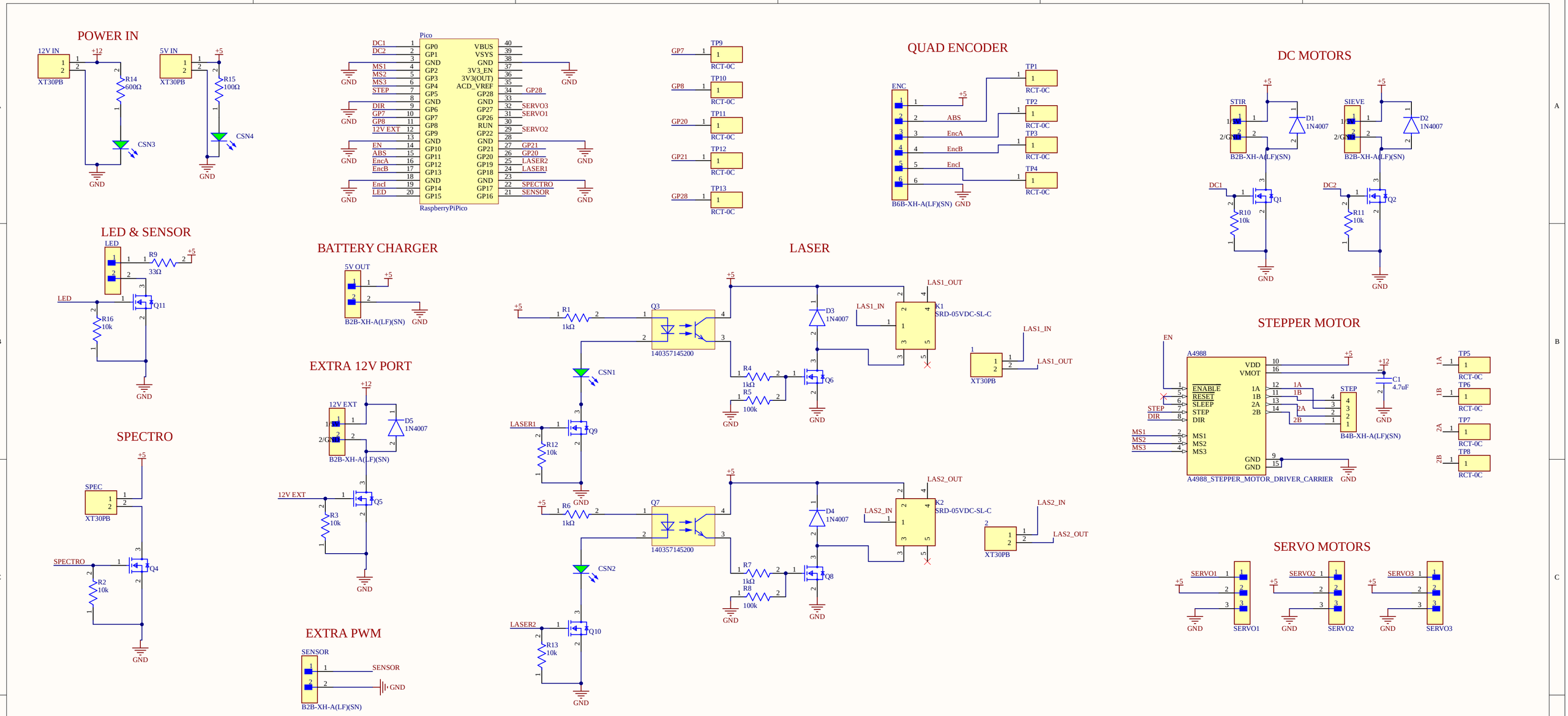

Title		
Size C	Number	Revision
Date: 4/23/2026	Sheet of	
File: science_sch.SchDoc	Drawn By:	