INDEX

Sr. No.	Experiment	Page	Date of Experiment	Date of Submission	Remarks
1.	Intro to microcontroller		17/1/18	31/1/18	31/1
2.	To add two 8-bit nos.		24/1/18	31/1/18	
3.	To add three 8-bit nos.		24/1/18	31/1/18	
4.	To add two 16-bit nos.		24/1/18	31/1/18	
5.	To subtract two 8-bit numbers.		31/1/18	14/2/18	21/2
6.	To subtract two 16-bit numbers.		31/1/18	14/2/18	
7.	To perform AND operation using immediate addressing mode.		14/2/18	21/2/18	
8.	To perform OR operation.		21/2/18	7/3/18	14/3
9.	To perform XOR operation		21/2/18	7/3/18	
10.	Compare two nos.		28/2/18	7/3/18	21/3
11.	multiplication of two 8-bit nos.		28/2/18	7/3/18	
12.	Division of two 8-bit nos.		7/3/18	14/3/18	

Scanned by CamScanner

Expt No.

Date 17 | 1 | 18

Introduction to Microcontroller.

The general purpose microprocessors such as Intel x86 family (8086, 80286, 80386, 80486, and the Pentium) or Motorola's 6th family. These microprocessors contain no RAM, no ROM, and no I/O ports the chip itself. Hence, they are commonly referred to as general-purpose microprocessors.

General purpose microprocessors must add RAM, ROM, I/O ports and timers externally to make them functional. Although addition of external devices makes these systems bulkier and much more expensive, they have versatility such as the designer can decide on the amount of RAM, ROM and I/O ports needed to fit the task at hand. On the other hand, a microcontroller has a CPU (a microprocessor) in addition to fixed amount of RAM, ROM, I/O ports, a timer all on a single chip i.e. the processor, RAM, ROM, I/O ports, are all embedded together on one chip. ∴ ~~the~~ any external memory, I/O, or timer cannot be added to it.

Teacher's Signature .....

Scanned by CamScanner

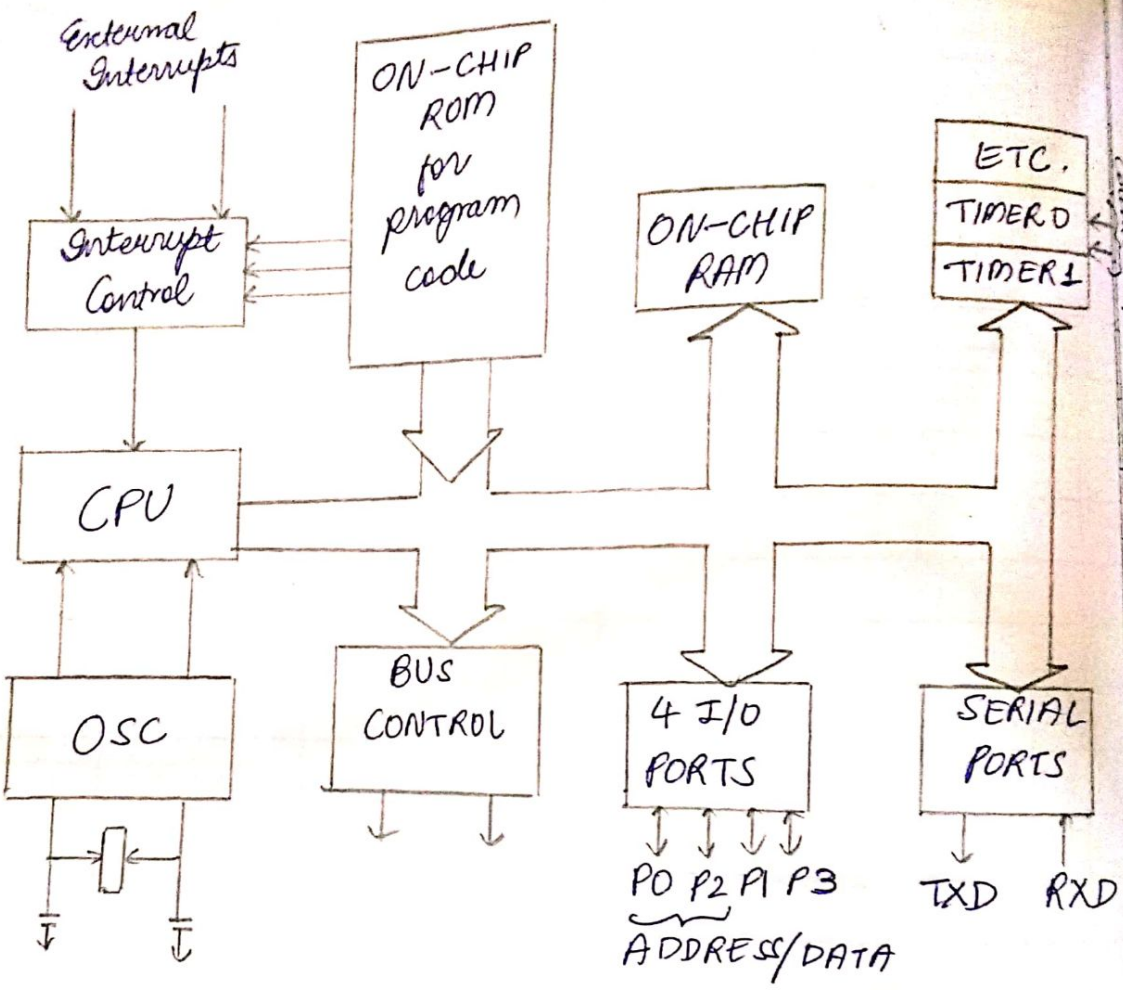

Inside the 8051 Microcontroller Block Diagram

Scanned by CamScanner

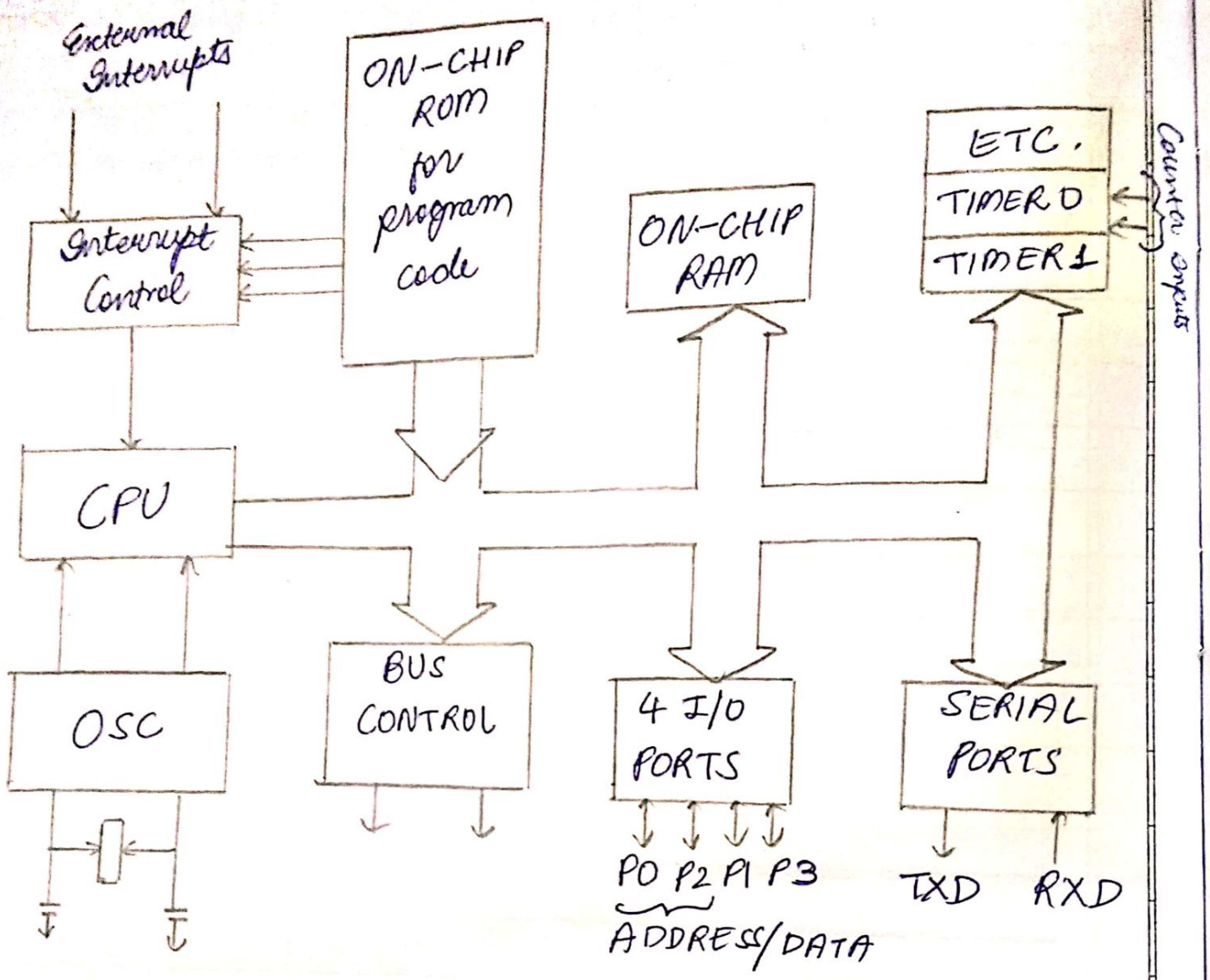

Inside the 8051 Microcontroller Block Diagram

Scanned by CamScanner

Expt No.

Date

OVERVIEW OF THE 8051 FAMILY :-

A brief history of the 8051

Microcontroller 8051 has 128 bytes of RAM, 4K bytes of on-chip ROM, two timers, one serial port, and four ports (each 8-bits wide) all on a single chip. Also called "system on a chip". 8051 is an 8-bit processor, meaning that the CPU can work on only 8 bits of data at a time. Data larger than 8-bits has to be broken into 8-bit pieces to be processed by the CPU. Although, 8051 can have max of 64K bytes of on-chip ROM, many manufacturers have put only 4K bytes on the chip.

Features of the 8051

Feature	Quantity
ROM	4K bytes
RAM	128 bytes
Timer	2
I/O pins	32
Serial port	1
Interrupt source	6

8051 microcontroller

Intel refers to it as MCS-51.

Teacher's Signature

Scanned by CamScanner

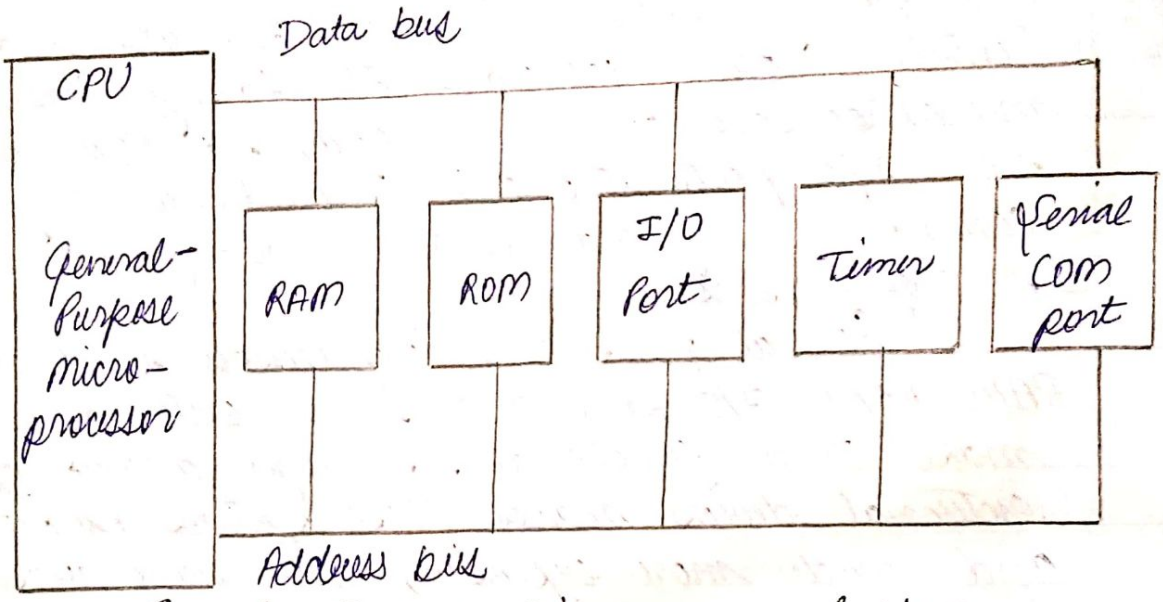

General - Purpose Microprocessor System

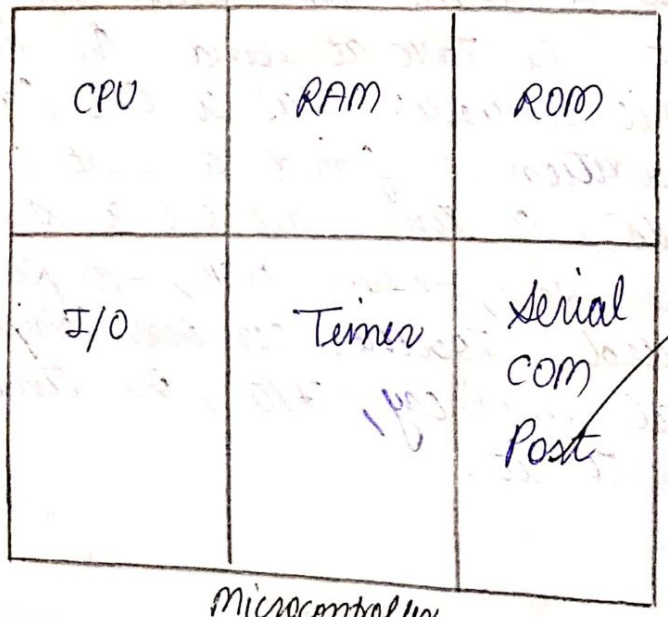

Microcontroller

Scanned by CamScanner

Expt No. | Date

* Other members of the 8051 family →

8052 microcontroller: It has all features of 8051 as well as an extra 128 bytes of RAM & an extra timer i.e. 256 bytes of RAM and 3 timers. It has 8K bytes of on-chip program ROM ~~at~~ instead of 4K bytes.

8031 microcontroller: Called ROM-less 8051 since it has bytes of on-chip ROM. To use this chip, external ROM has to be added which contains programs that the 8031 will fetch & execute.

* Comparison of 8051 Family Members →

Feature	8051	8052	8031
ROM (on-chip program space in bytes)	4K	8K	0K
RAM (bytes)	128	256	128
Timers	2	3	2
I/O pins	32	32	32
Serial port	1	1	1
Interrupt sources	6	8	6

* PINS

- GND → Pin 20 is the ground.
- XTAL1 and XTAL2 →

8051 has an on-chip oscillator but requires an external clock to run it. Mostly, a quartz crystal oscillator is connected to inputs XTAL1 & XTAL2. The quartz crystal oscillator also needs two capacitors of 30pF value. One side of each capacitor is connected to ground.

Teacher's Signature.....

Scanned by CamScanner

PDIP / Cerdip

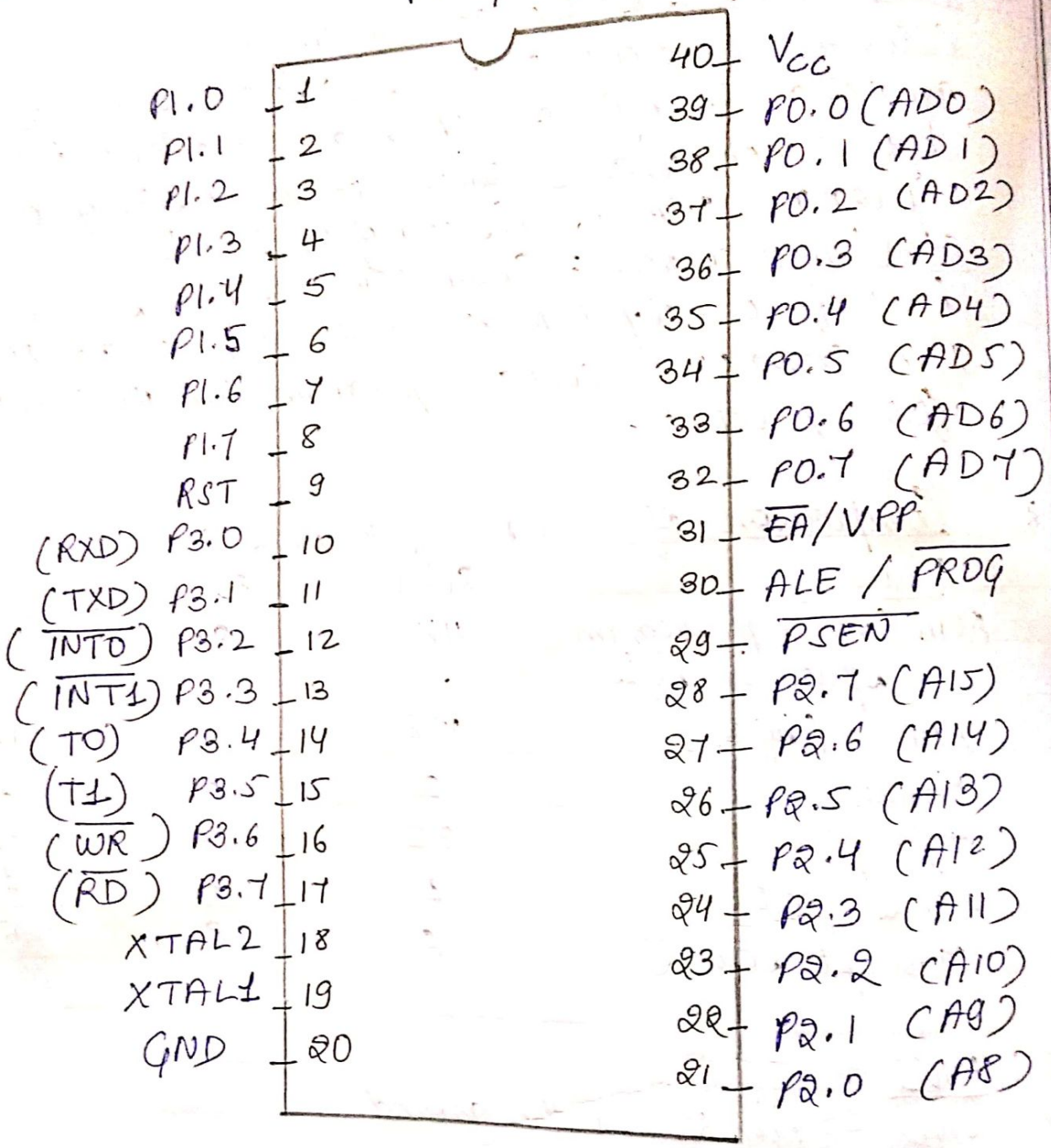

Scanned by CamScanner

Expt No. | Date

- RST → Pin 9 is the RESET pin. It is an input & is active high (normally low). Upon applying high pulse to this pin, the microcontroller will reset & terminate all activities. This is often referred to as a power-on reset. Activating a power on reset will cause all values in the registers to be lost. It will set program counter to all 0's.

- $\overline{EA}$ → stands for "External access" (pin no. 31). It is an input pin which must be connected to either Vcc or GND i.e. it cannot be left unconnected. All the 8051 family members come with on-chip ROM to store programs, so $\overline{EA}$ pin is connected to Vcc. For family members such as 8031 & 8032 in which there is no on-chip ROM, code is stored on an external ROM & is fetched by 8031/32 ∴ for 8031, the $\overline{EA}$ pin must be connected to GND to indicate that code is stored externally.

- $\overline{PSEN}$ → (output pin) stands for "program store enable". In 8031-based sys (externally holds program code), this pin is connected to OE pin of the ROM.

- ALE → (address latch enable) Output pin & is active high. When connecting 8031 to ext memory, Port 0 provides both address & data i.e. 8031 multiplexes address & data through port 0. ALE pin demultiplexes the address & data by connecting to the G pin of the 74LS373 chip.

वंश

Teacher's Signature.....

Scanned by CamScanner

Expt No. | Date

- Ports 0, 1, 2 and 3 → P0, P1, P2 and P3 each use 8 pins, making 8-bit ports. All ports upon RESET are configured as input, since P0-P3 have value FFH on them.

(i) P0 → also designated as AD0-AD7, allowing it to be used for both address & data. 8051 multiplexes address & data through port 0 to save pins. ALE tells if P0 has add or data. When ALE = 0, it provides data D0-D7, but when ALE=1, it has address A0-A7 ∴ ALE demultiplexes address & data using 74LS373 latch.

(ii) P1 and P2 → In 8051 (no ext mem connection), both P1 & P2 are used as simple I/O. However, in 8031 (with ext mem conn), port 2 must be used along with port 0 to provide the 16-bit address for the ext. memory.

(iii) P3 → 8 pins (10-17) used as Input or output. It is configured as an input port upon reset. P3 is used to provide interrupts.

- PSW (Program Status Word) register:
  PSW ~~is~~ register is a 8-bit register. It is also referred to as the ~~fig~~ flag register. Bits PSD3 & PSD4 are designated as RS0 & RS1 respectively & used to change the bank register.

→ 8051 register banks & Stack →

- RAM memory space allocation in the 8051
  There are 128 bytes of RAM in the 8051.

Teacher's Signature .....

वंश

Scanned by CamScanner

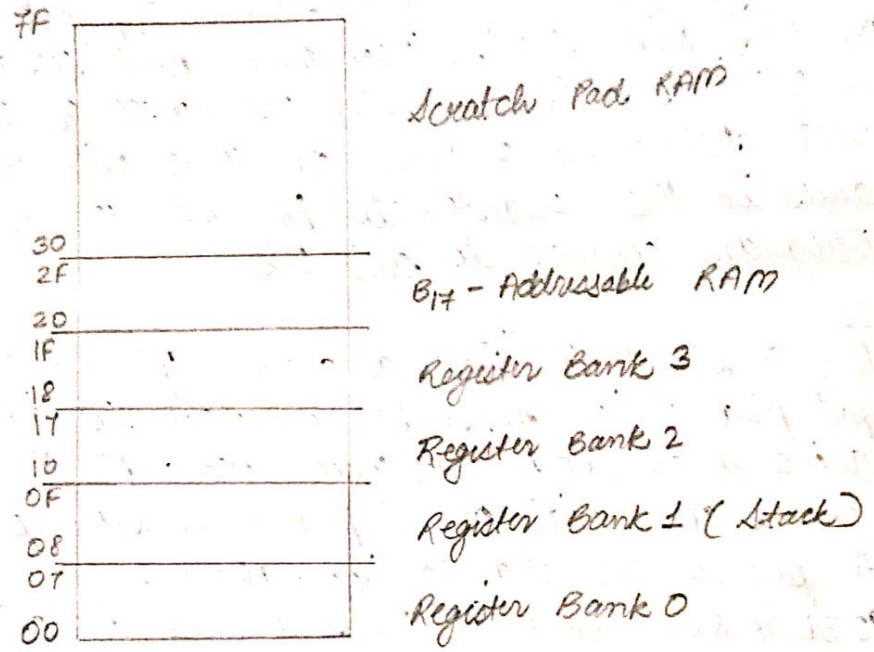

RAM Allocation in the 8052

Scanned by CamScanner

Expt No.

Date

1) A total of 32 bytes from locations 00 to 1F hex are set aside for register banks & the stack

2) A total of 16 bytes from locations 20 to 2FH are set aside for bit-addressable read/write memory.

3) A total of 80 bytes from locations 30H to 7FH are used for read & write storage or what is normally called a scratch pad.

→ Addressing modes of 8051 :-
Various ways of accessing data are called addressing mode. The 8051 provides a total of distinct addressing modes.

(1) Immediate addressing mode →
The source operand is a constant, the operand comes immediately after the opcode. The immediate data must be preceded by the pound sign, "#".
Eg - MOV A, #25H ; load 25H into A
MOV R4, #62, load the decimal value 62 into R4.
MOV DPTR, #4521H ; DPTR = 4512H

(2) Register addressing mode →
Registers are used to hold the data to be manipulated.
Eg - MOV A, R0 ; copy the contents of R0 into A.
MOV R2, A ; copy the contents of A into R2.

Teacher's Signature.....

Scanned by CamScanner

Expt No.

Date

MOV A, R5; add the contents of R5 to contents of A.

The source & destination registers must match
i.e - We can move data between the accumulator & R_n but movement of data b/w R_n registers is most allowed.

(3) Direct addressing mode :-
The data is in a RAM memory location whose address is known & this address is given as a part of the instruction.
Eg - MOV R0, 40H ; save content of RAM location 40H in R0.
MOV 56H A ; save contents of A in RAM location 56H.
MOV R4, 7FH; move contents of RAM location 7FH to R4.

(4) Register indirect addressing mode :-
A register is used as a pointer to the data. If the data is inside the CPU, only registers R0 & R1 are used for this purpose.
Eg - MOV A, @R0 ; move contents of RAM location whose address is held by R0 into A.
MOV @R1, B ; move contents of B into RAM location whose address is held by R1.
when R0 & R1 are used as pointers, i.e. when they hold the addresses of RAM locations, they must be preceded by the '@' sign.

Teacher's Signature.....

Scanned by CamScanner

Expt No.

Date

5) Indexed addressing mode :-
Used in accessing data elements of look-up tables entries located in the program ROM space of 8051.
Eg- MOVC A, @A+DPTR : contents of A are added to 16 bit register DPTR to form 16-bit address of needed data.

- ~~PSW (Program Status Word) Register :-~~
~~PSW is an 8-bit register. It is also referred to as the flag register~~

Teacher's Signature.....

Scanned by CamScanner

8051 FLAG AND THE PSW REGISTER

PSW (Program status word) register
The program status word (PSW) register is an 8-bit register. It is also referred as the flag register. Although the PSW register is 8 bits wide, only 6 bits of it are used by 8051. These are two user-definable flags.

8051 REGISTER BANK AND STACK

RAM memory space allocation in the 8051
There are 128 bytes of RAM in the 8051.

1. A total of 32 bytes from locations 00 to 1F hex are set aside for register bank and the stack.
2. A total of 16 bytes from locations 20H to 2FH are set aside for bit-addressable read/write memory
3. A total of 80 bytes from locations 30H to 7FH are used for read and write storage, or what is normally called a scratch pad

Register Bank
A total of 32 bytes of RAM are set aside for register banks and stack.

Scanned by CamScanner

CY	AC	F0	RS1	RS0	OV	-	P

CY	PSW.7	Carry Flag
AC	PSW.6	Auxiliary carry flag
F0	PSW.5	Available to the user for general purpose
RS1	PSW.4	Register Bank selector bit 1.
RS0	PSW.3	Register Bank selector bit 0.
OV	PSW.2	Overflow flag
-	PSW.1	User definable bit
P	PSW.0.	Parity flag set/cleared by hardware each instruction cycle to indicate an odd/even number of 1 bits in the accumulator.

RS1	RS0	Register Bank	Address
0	0	0	00H - 07H
0	1	1	08H - 0FH
1	0	2	10H - 17H
1	1	3	18H - 1FH

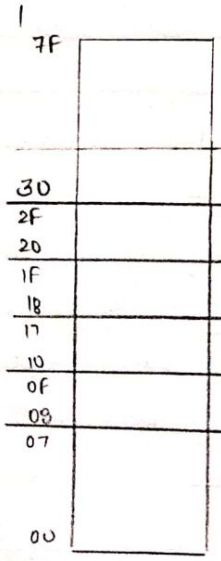

Scanned by CamScanner

Expt No.

Date 24 | 1 | 18

Experiment 1

AIM :- To add two 8-bit numbers.

ADDRESS	MNEMONICS	OPCODE	COMMENTS
ET-31LCD Sub-M/R?			Press S
			Press Enter. Enter the address from where you want the program to start.
6500			Press Enter.
6500	MOV A, #02H	74	Move immediate in Acc.
6501		02	First no.
6502	ADD A, #01H	24	Add
6503		01	Second no.
6504	MOV DPTR, #6550H	90	Move DPTR
6505		65	Address at which DPTR is
6506		50	going. (Final o/p location).
6507	MOVX @DPTR, A	F0	Move content of A to address at which DPTR is pointing.
6508	LJMP 0006H	02	long jump to address 0006
6509		00	to end the program.
650A		06	Press Enter.
650B			Press Esc.
Cmd-word=			Press G
Goto ?			Press Enter
Burst			Press Enter
Add. 6500			Enter the address from

Teacher's Signature.....

Scanned by CamScanner

Expt No.

Date

			where your program is started.
Wait			Press Enter.
Done			Press Esc. Press E.
Addr-			Press Enter twice.
6550			Enter the address at which your result is stored. Press Enter.
6550		03	Answer

Result →
Two 8-bit numbers are added successfully.

Input data →
02
01

Output data →
03

Teacher's Signature.....

Scanned by CamScanner

Expt No.

Date 24 1 18

Experiment 2

Aim:- To add three 8-bit numbers.

Address	Mnemonics	Opcode	Comments
ET-31 LCD Kit-Mk2			Press S.
			Press Enter. Enter the address from where you want the program to start
6500			
6500	MOV A, #02H	74	Move immediate in Acc.
6501		02	First number.
6502	ADD A, #03H	24	Add
6503		03	Second number
6504	MOV DPTR #6550H	90	Move DPTR.
6505		65	Address at which DPTR is pointing (6550).
6506		50	Final O/P will be stored at this locatn.
6507	MOVX @DPTR, A	F0	Move content of A to address at which DPTR is pointing.
6508	ADD A, #04H	24	Add
6509		04	Third number.
650A	MOV DPTR,	90	Move DPTR.
650B	#6551H	65	Address at which DPTR is pointing
650C		51	(6551). Final O/P will be stored at this locatn.
650D	MOVX @DPTR, A	F0	Move content of A to address at which DPTR is pointing.
650E	LJMP, 0006H	02	Long jump to address 0006 to end the program.
650F		00	

Teacher's Signature.....

Scanned by CamScanner

Input Data :-

02

03

04

Output Data :-

09

Scanned by CamScanner

Expt No.

Date

6510	06	Press Enter.
6511		Press Esc.
End word=		Press G.
Goto ?		Press Enter.
Burst		Press Enter.
Addr-		Enter the address from where
6500		your program is starting.
		Press Enter.
wait		Press Esc. Press S. Press
Done		enter twice.
Addr-		Enter your add. where result
6550		is stored. Press Enter.
6550	05	Addition of 2 8-bit no.
6551		Press Esc. Press S. Press enter
		twice. Enter add where result
		is stored.
6551	09	Answer

Result:
Three 8-bit numbers are added successfully.

Teacher's Signature.....

Scanned by CamScanner

Expt No.

Date 24 1 18

Experiment 3

Aim :- To add two 16-bit numbers.

Address	Mnemonics	Opcode	Comments
ET-SLCD			
Lab-01/K2			Press S.
			Press Enter - Enter the address from where you want the prog to start
6500			
6500	MOV A, #45H	74	Move immediate in Acc.
6501		45	First Number's LSB.
6502	ADD A, #0ECH	24	Add
6503		0EC	Second Number's LSB.
6504	MOV DPTR, #6550H	90	Move DPTR.
6505		65	
6506		50	Address at which DPTR is pointing (6550) (Result of LSB)
6507	MOVX @DPTR, A	F0	Move content of A to address at which DPTR is pointing.
6508	MOV A, #02H	74	Move immediate in Acc.
6509		02	Second Number's MSB.
650A	ADDC A, #0FCH	34	Add with carry.
650B		0FC	First number's MSB.
650C	MOV	90	Move DPTR.
650D		65	
650E		51	Address at which DPTR is pointing (6551) (Result of MSB)

Teacher's Signature .....

Scanned by CamScanner

Input

FC 45

02 EC

Output

ff31

Result

Two 16-bit numbers are added successfully.

Scanned by CamScanner

Expt No. | Date

650F	MOV@DPTR, A	F0	move content of A to add at which DPTR is pointing.
6510	LJMP, 0006H	02	long jump to address 0006 to end the program
6511		00	
6512		06	
6513			Press Enter
Cmd-Word			Press Esc
Goto?			Press G
Burst			Press Enter
Addr-			Press Enter
6500			Press the address from which your prog. is starting. Press Enter.
Wait			Press Esc. Press S.
Done			Press Enter twice.
Addr-			Enter the address where LSB
6500			of result is stored. Press Enter.
6550		31	(LSB of Result) Press Enter.
6551		FF	(MSB of Result).

Teacher's Signature .....

Scanned by CamScanner

Expt No.

Date 31 | 1 | 18

Experiment-4

Aim :- To subtract two 8-bit numbers.

Address	Mnemonics	Opcode	Comments
ET-31LCD			
Sub-M/R?			Press S. Press Enter. Enter the address
6500			from where you want the prog.
			to start.
6500	MOV A, #08H	74	Move immediate in Acc.
6501		08	First no.
6502	SUBB A, #03H	94	Subtract with Borrow.
6503		03	Second no.
6504	MOV DPTR,	90	Move DPTR
6505	#6550H	65	Address at which DPTR is
6506		50	going (Final O/P).
6507	MOVX @DPTR, A	F0	Move content of A to address
			at which DPTR is pointing.
6508	LJMP 0006H	02	Long Jump to address
6509		00	0006 to end program
650A		06	Press Enter.
650B			Press Esc.
Cond/Word?			Press G.
Goto			Press Enter.
Burst			Press Enter.
Addr-			Enter the address (Starting).
6550			Press Enter.
Wait			Press Esc. Press S. Press
Done			Enter twice.

Teacher's Signature .....

Scanned by CamScanner

Expt No.

Date

Addr-			
6550			Enter resulting address.
6550		05	Press Enter.
			Answer.

Input
08
03

Output
05

Result :-
Two 8-bit numbers are subtracted successfully.

Teacher's Signature.....

Scanned by CamScanner

Expt No.

Date 31 1 18

Experiment -5

Aim :- To subtract two 16-bit numbers.

Address	Mnemonics	Opcode	Comments
ET-31 LCD Sub M/R?			Press S. Press Enter. Enter the address from where you want the program to start.
6500			
6500	MOV A, # 45H	74	Move immediate to Acc.
6501		45	First number's LSB.
6502	SUBB A, #0ECH	94	Subtract with Borrow.
6503		0EC	Second number's LSB.
6504	MOV DPTR, #6550H	90	Move DPTR.
6505		65	
6506		50	Address at which DPTR is pointing (6550). (Result of LSB).
6507	MOVX @DPTR, A	F0	Move content of A to address at which DPTR is pointing.
6508	MOV A, #0FCH	74	Move immediate in Acc.
6509		0FC	First number's MSB.
650A	SUBB A, # 02H	94	Subtract with Borrow
650B		02	Second number's MSB.
650C	MOV DPTR, #6551	90	Move DPTR.
650D		65	
650E		51	Address at which DPTR is pointing (6551) (Result of MSB)

Teacher's Signature .....

Scanned by CamScanner

Input
F045
02EC

Output
F959

Expt No.

Addr
ET-31
Sub m

6500
650
650
650
650
650
65
65

65

65
65
6
6
6
6
6

Scanned by CamScanner

Expt No.

Date

650F	MOV@DPTR, A	F0	Move contents of A to add. pointed by DPTR.
6510	LJMP, 0006H	02	Long Jump to address 0006 to end the program.
6511		00	
6512		06	
6513			Press Enter.
Cmd_word=			Press Esc.
Goto?			Press G.
Burst			Press Enter.
Addr-			Press the starting address.
6500			Press Enter.
Wait			Press Esc. Press S. Press
Done			enter twice.
Addr-			Enter the address where
6550			LSB of result is stored.
			Press Enter.
6550		59	(LSB of Result) Press Enter.
6551		F9	(MSB of Result).

Result →

Two 16-bit numbers are subtracted successfully.

Teacher's Signature.....

Scanned by CamScanner

Expt No.

Date 14 2 18

Experiment - 6 (A)

Aim :- WAP to perform AND operation between 37H and 42H by using immediate addressing mode.

Address	Mnemonics	Opcode	Comments
ET-31LCD Sub-M/R?			Press S. Press Enter. Enter the address from where you want to start.
6500			Press Enter.
6500	MOV A, #37H	74	Move immediate in Acc.
6501		37	First no.
6502	AND A, #42H	54	Perform AND.
6503		42	Second no.
6504	MOV DPTR, #6550H	90	Move DPTR to Result
6505		65	address.
6506		50	
6507	MOVX @DPTR, A	F0	Move content of A to address at which DPTR is pointing.
6508	LJMP 0006H	02	Long jump To end the
6509		00	prog. Press Enter.
650A		06	
650B			Press Esc.
Cmd-word=			Press G.
Goto?			Press Enter.
Burst			Press Enter.
Addr- 6500			Enter the address from start. Press Enter.

Teacher's Signature.....

Scanned by CamScanner

Expt No.

Date

Wait			Press Esc. Press S.
Done			Press Enter twice.
Addr -			Enter the address at
6550			which your result is
			stored. Press Enter.
6550		02	Answer

Result :-

AND operation b/w 2 nos has been performed successfully.

Input → 37, 42

Output → 02

Teacher's Signature.....

Scanned by CamScanner

Expt No.

Date 21 2 18

Experiment - 6(B)

Aim :- WAP to perform OR operation b/w data stored in R_0 & R_4 which are 13H & 64H resp.

Address	Mnemonics	Opcodes	Comments
ET-31LCD Lab-M/R?			Press S. Press Enter. Enter the starting address.
6500	MOV R_0, #13H	78	Move immediate in Reg R_0.
6501		13	No. moved in Reg. R_0.
6502	MOV R4, #64H	7C	Move immediate in R_4.
6503		64	No. moved in R_4.
6504	MOV A, R_0	E8	Move content of R_0 in A.
6505	ORL A, R_4	4C	Perform OR operation.
6506	MOV DPTR, 6550H	90	Move DPTR.
6507		65	
6508		50	Address at which DPTR is pointing (6550) Your final output will be stored at this location.
6509	MOVX @DPTR, A	F0	Move content of A to address at which DPTR.
650A	LJMP 0006H	02	Long Jump to address 0006 to end the program.
650B		00	
650C		06	Press Enter.
650D			Press Esc.
Cn-Word =			Press G
GoTo?			Press Enter.

Teacher's Signature.....

Scanned by CamScanner

Expt No. | Date

Boot			Press Enter
Addr- 6550			Enter starting address. Press Enter!
wait			Press Esc. Press enter twice.
Done			
Addr- 6550			Enter the address at which your result is stored. Press Enter.
6550		77	Answer.

Result →
OR operation b/w data stored in registers is performed successfully.

Input → 13, 64
Output → 77

Teacher's Signature.....

Scanned by CamScanner

Expt No.

Date 21 2 18

Experiment - 6(c)

Aim :- WAP to perform XOR operation b/w data 92H and FFH.

Address	Mnemonics	Opcodes	Comments
ET-31LCD Sub-M/R?			Press S. Press Enter. Enter the address from where you want to start. Press Enter.
6500	MOV A, #92H	74	Move immediate in Acc.
6501		92	First no.
6502	XRL A, #FFH	64	Perform XOR.
6503		FF	Second no.
6504	MOV DPTR, #6550	90	Move DPTR to Result
6505		65	Address.
6506		50	
6507	MOVX @DPTR, A	F0	Move content of A to address at which DPTR is pointing.
6508	LJMP 0006H	02	Long jump to end the
6509		00	prog. Press Enter.
650A		06	
650B			Press Esc.
Ind-word=			Press 9.
Goto?			Press Enter.
Burst			Press Enter.
Addr -			Enter the address from
6550			start. Press Enter.
Wait			Press Esc. Press S. Press

Teacher's Signature.....

Scanned by CamScanner

Expt No.

Date

Done Addr - 6550			Enter twice. Enter the address at which your result is stored. Press Enter.
6550		6D	Answer.

Result →
AND operation b/w two no's has been performed.

Input → 92, FF
Output → 6D

Teacher's Signature.....

Scanned by CamScanner

Expt No.

Date 28 2 18

Experiment -7

Aim :- WAP to compare 2 no's if no's are equal A ← 1 else A ← 0

Address	Mnemonics	Opcode	Comments
ET-31LCD Sub-M/K?			Press S. Press Enter. Enter the starting address. Press Enter.
6500	MOV R_0, #05H	78	Move data in Reg R_0
6501		05	Data.
6502	CJNE R_0, #06,	B8	Compare & jump if not
6503	#04H	06	equal Data to be ~~converted~~
6504		0H	compared with Jump4 ~~stop~~ if false
6505	MOV A, #01H	74	Move 01 in A.
6506		01	
6507	SJMP, #02H	80	Jump 1 instruction if
6508		02	value in A is 1.
6509	MOV A, #00H	74	If not equal move
650A		00	00 in A.
650B	MOV DPTR, #6550	90	Move DPTR to address
650C		65	6550
650D		50	
650E	MOVX @DPTR, A	F0	Move content of A at which DPTR is pointing.
650F	LJMP 0006H	02	Long jump to address
6510		00	0006 to end the prog.
6511		06	Press Enter.
6512			Press esc.
			Press G.

End-word =

Teacher's Signature.....

Expt No. | Date

Goto?			Press enter twice.
Burst			
Addr- 6550			Enter starting address. Press Enter.
Wait			Press Esc. Press 5.
Done			Press Enter twice.
Addr- 6550			Enter the result add. Press Enter.
6550		0	Answer.

Result →
Nos are compared & as they are not equal so result is 0.

Input → 05, 01
Output → 0

Teacher's Signature

Scanned by CamScanner

Expt No.

Date 28 8 18

Experiment - 8

Aim :- WAP to perform multiplication of two 8-bit no.

Address	Mnemonics	Opcode	Comments
ET-31LCD			
Sub-M/R?			Press S. Press Enter.
			Enter start address.
6500	MOV A, #08H	74	move immediate in A.
6501		08	First no.
6502	MOV B, #04H	75	move immediate in B.
6503		F0	second no.
6504		04	
6505	MUL A, B	A4	multiplication of A & B.
6506	MOV DPTR, #6550A	90	move DPTR to result
6507		65	address. (LSB)
6508		50	
6509	MOVX @DPTR, A	F0	
650A	MOV A, B	E5	mov A, direct
650B		F0	
650C	MOV DPTR, #6550	90	move DPTR
650D		65	
650E		51	
650F	MOV @DPTR, A	F0	
6510	LJMP, 0006H	02	long jump to 0006
6511		00	
6512		06	Enter
6513			Press Esc.
Cmd_word?			Press G
Goto?			Press Enter
Burst			Press Enter.

Teacher's Signature.....

Scanned by CamScanner

Expt No.

Date

Addr. 6500		Enter starting address. Press Enter
unit Done		Press Esc, S, Enter twice.
Addr- 6550		Enter the resultant add. Enter.
6550	00	LSB of multiplication
6551	20	Press enter for MSB.

Result →
multiplication of two 8-bit nos. is performed successfully with 20H as result.

Input → 08B, 04
Output → 20, 00

Teacher's Signature.....

Scanned by CamScanner

Expt No.

Date 7 3 18

Experiment - 9

Aim:- WAP to perform division of two 8-bit nos.

Address	Mnemonics	Opcode	Comments
ET-31LCD			
Sub-M/R?			Press S. Press Enter. Enter start address.
6500	MOV A, #08H	74	move 08 immediate
6501		08B	in A.
6502	MOV B, #04H	75	move immediate in
6503		F0	B reg.
6504		04	
6505	DIV A, B	84	Division of A by B.
6506	MOV DPTR, 6550H	90	move DPTR.
6507		65	(LSB of output)
6508		50	
6509	MOVX @DPTR, A	F0	move content of A
650A	MOV A, B	E5	move B to A.
650B		F0	
650C	MOV DPTR, 6551H	90	move DPTR
650D		65	(MSB of output)
650E		51	
650F	MOVX @DPTR, A	F0	move content of F to DPTR pointing address.
6510	LJMP 0006H	02	long jump.
6511		00	
6512		06	
6513			Press Esc.

Teacher's Signature.....

Expt No.		Date

Cmd-Word		Press G.
Goto?		Press Enter twice.
Burst		
Addr - 6550		Enter starting address.
wait		Press Esc. Press enter
Done		Twice.
Addr - 6550		Enter resultant address.
		Press Enter.
6550	00	Answer (LSB).
6551	02	MSB

Result →
Division of two 8-bit nos. is produced successfully.
Input → 08, 04
Output → 02, 00

Teacher's Signature.....

Scanned by CamScanner