Kozel

& Ishita

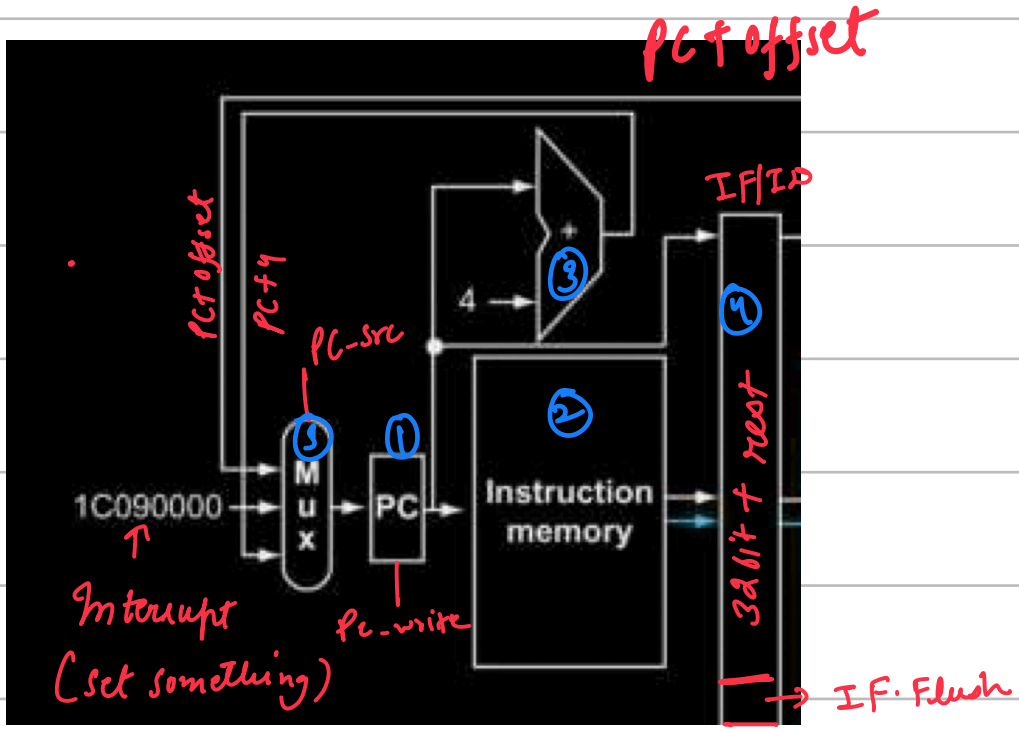
PC+offset
IF/ID
PC+offset
PC+4
PC_src
4
+
M
u
x
PC
Instruction
memory
1C090000
Interrupt
(set something)
PC_write
32bit + rest
IF.Flush

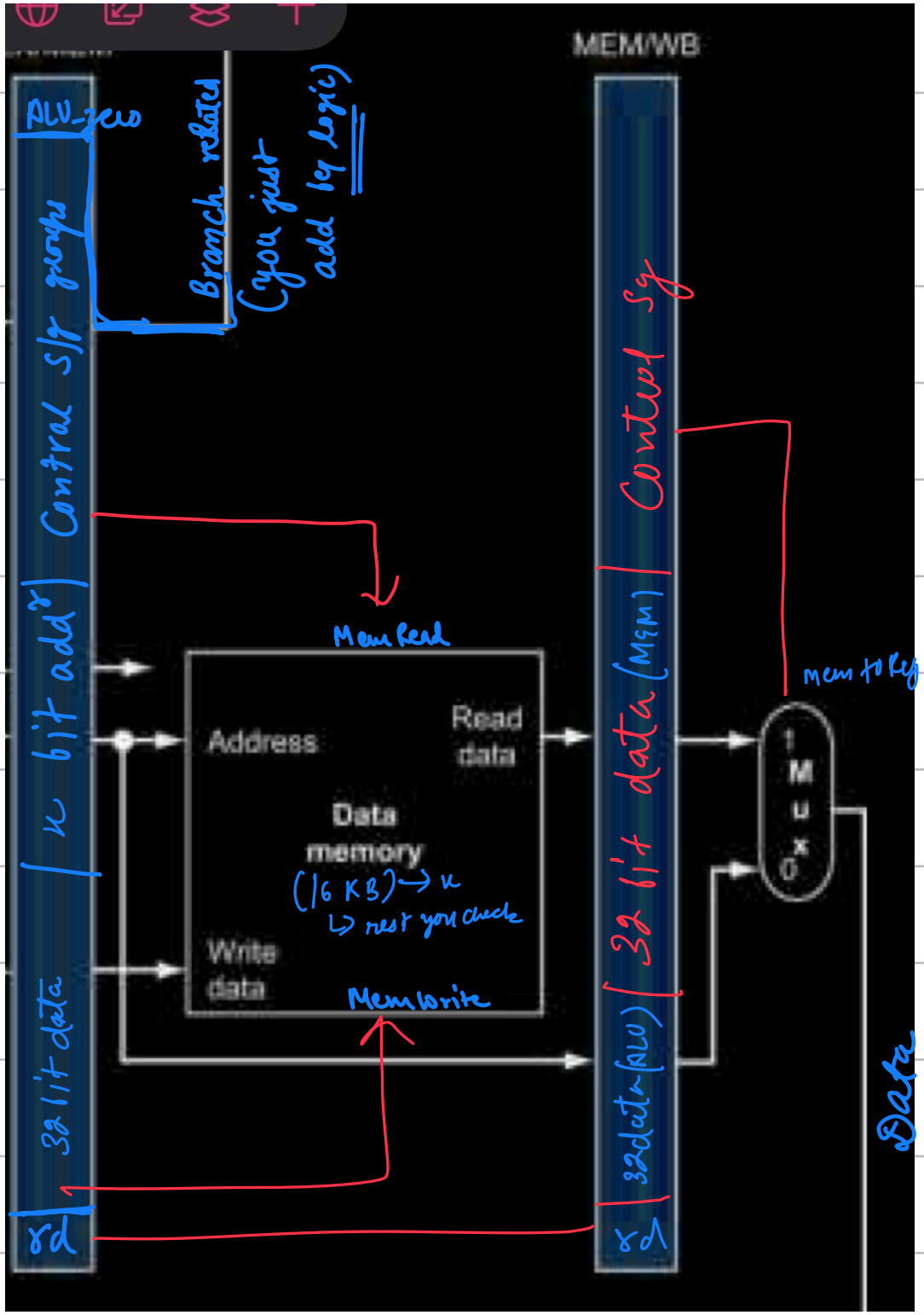
MEM/WB
ALU-zero
Branch related
(you just add log logic)
Control s/g groups
x bit addr
32 bit data
rd
Mem Read
Address
Read data
Data memory
(16 KB) → x
↳ rest you check
Write data
Mem Write
32 bit data (MEM)
Control sg
32 bit data (ALU)
x
mem to reg
1
M
u
x
0
Data