DRAWING REVISION INFORMATION			
REV	DESCRIPTION	DRAWN BY	ISSUE DATE
-	ORIGINAL ISSUE	ETD	10/14/14
-	REV - IS EQUAL TO PROTO/QUOTE REV 1	ETD	10/14/14

1.材料：6262-T8/T9或日6061-T6 鋁
2.硬陽：依照規範MIL-A-8625, TYPE III, CLASS 2, 厚度 .0008+/-.0004[0.02+/-0.01]
3.所有尺寸都是陽極之後
4.未指定R角 .005/.015 [0.13/0.38]
5.去毛邊
6.僅允許此端有中心點 Ø.060[1.5]MAX
7.不允許有銳角
8.允許此尺寸有接觸點

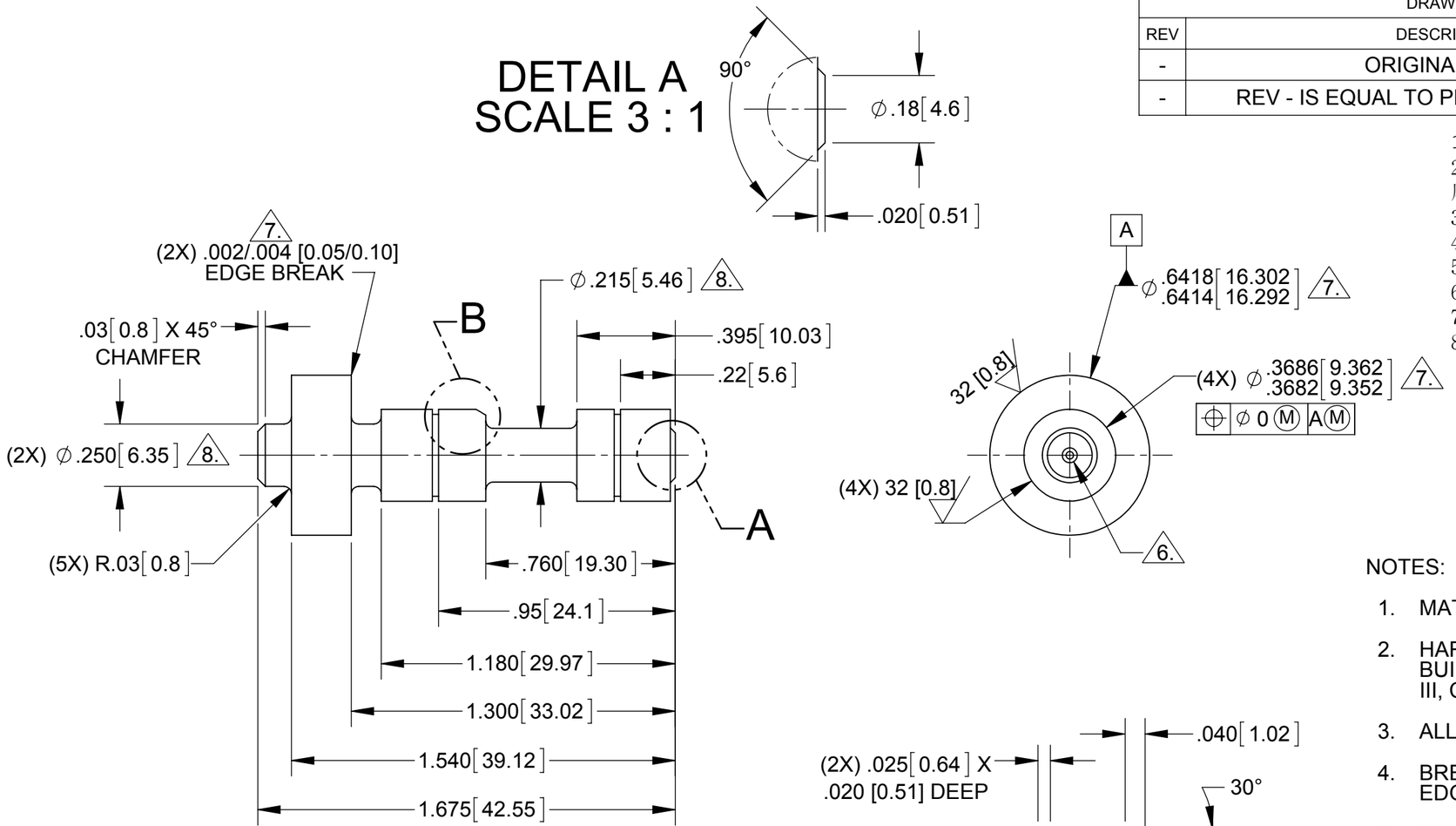

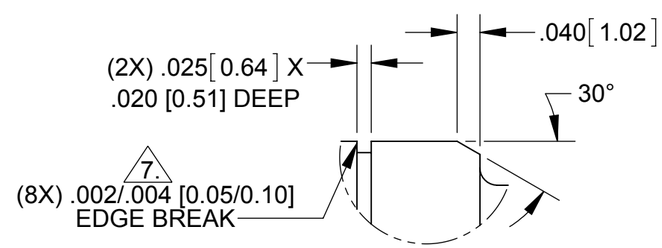

DETAIL B
SCALE 4 : 1

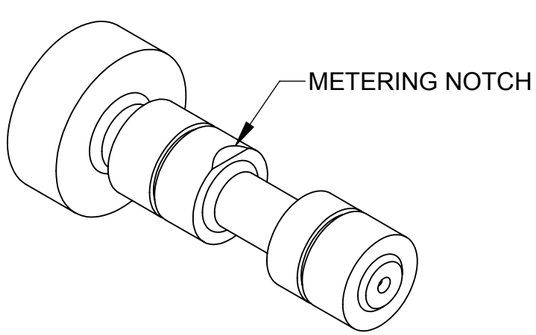

NOTES:

1. MATERIAL: 6262-T8/T9 OR 6061-T6 ALUMINUM
2. HARD ANODIZE TO YIELD .0008±.0004 [0.02±0.01] BUILD-UP PER SURFACE, PER MIL-A-8625, TYPE III, CLASS 2
3. ALL DIMENSIONS APPLY AFTER ANODIZE
4. BREAK/RADIUS UNSPECIFIED SHARP EDGES/FILLETS, .005/.015 [0.13/0.38]
5. REMOVE BURRS

6. CENTER DRILL PERMISSIBLE, Ø.060 [1.5] MAX. THIS END ONLY.

7. SHARP EDGES WILL NOT BE TOLERATED

8. CONTACT POINTS PERMITTED ON THIS DIAMETER

KEY CHARACTERISTIC SYMBOLS

Cr CRITICAL — Ma MAJOR

UNLESS OTHERWISE SPECIFIED
DRAFTING PER ASME Y14.5M-1994
DIMENSIONS ARE IN INCHES [MILLIMETERS]

.XX [X.X] ±	.015 [0.38]
.XXX [X.XX] ±	.005 [0.13]
ANGLES ±	1°
SURFACE FINISH	125 [3.2]

THIRD ANGLE PROJECTION

CURRENT ISSUE	DATE
DRAWN ETD	08/05/14
CHECKED TVM	08/21/14
MFG ENG -	-
APPROVED DGP	10/13/14
ISSUED PRJ	10/14/14

TITLE: VALVE

SIZE	DWG NO.	REV
B	157740-16	-

SCALE 2:1 | EST. WT. 0.02 LBS | SHEET 1 OF 1

APPROVED