DRAWING REVISION INFORMATION			
REV	DESCRIPTION	DRAWN BY	ISSUE DATE
1	PROTO/QUOTE	ETD	-

1.材料：6262-T8/T9或日6061-T6 鋁
2.硬陽：依照規範MIL-A-8625, TYPE III, CLASS 2,
厚度 .0008+/-.0004[0.02+/-0.01]
3.所有尺寸都是陽極之後
4.未指定R角 .005/.015 [0.13/0.38]
5.去毛邊
6.僅允許此端有中心點 Ø.060[1.5]MAX
7.不允許有銳角
8.允許此尺寸有接觸點

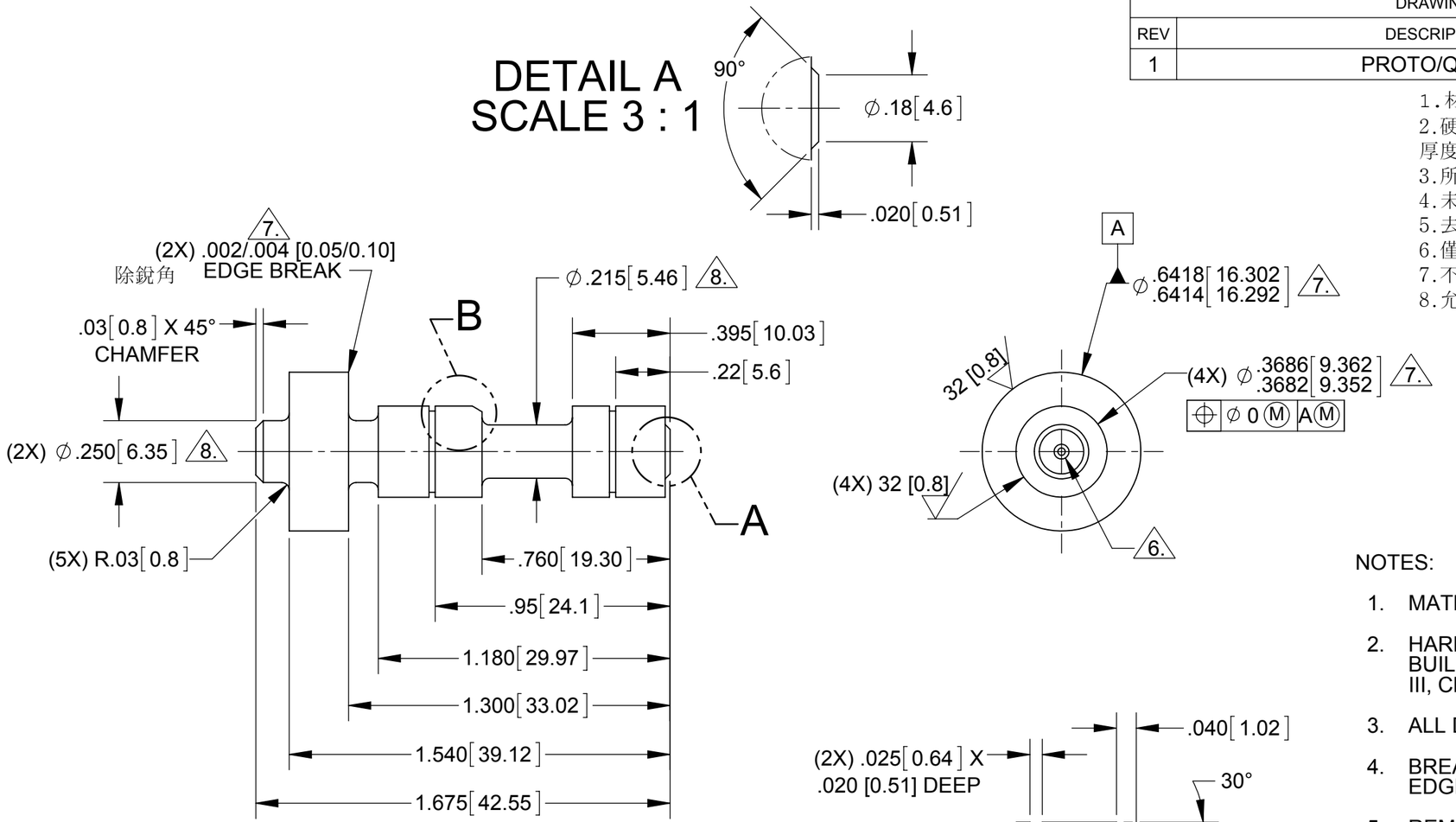

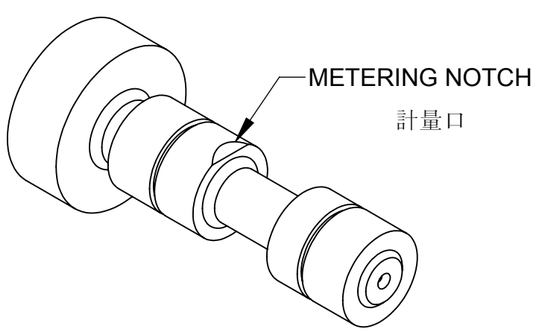

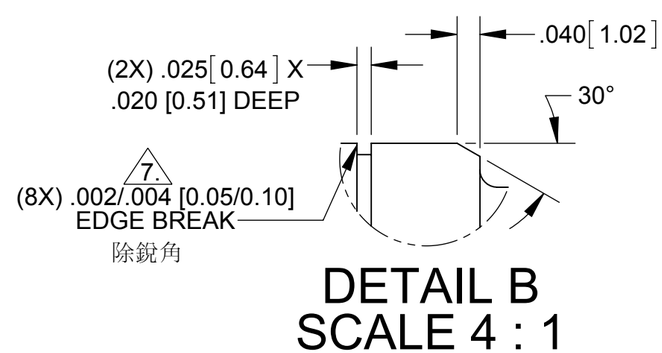

NOTES:

1. MATERIAL: 6262-T8/T9 OR 6061-T6 ALUMINUM
2. HARD ANODIZE TO YIELD .0008±.0004 [0.02±0.01] BUILD-UP PER SURFACE, PER MIL-A-8625, TYPE III, CLASS 2
3. ALL DIMENSIONS APPLY AFTER ANODIZE
4. BREAK/RADIUS UNSPECIFIED SHARP EDGES/FILLETS, .005/.015 [0.13/0.38]
5. REMOVE BURRS

6. CENTER DRILL PERMISSIBLE, Ø.060 [1.5] MAX. THIS END ONLY.

7. SHARP EDGES WILL NOT BE TOLERATED

8. CONTACT POINTS PERMITTED ON THIS DIAMETER

KEY CHARACTERISTIC SYMBOLS

Cr CRITICAL

Ma MAJOR

UNLESS OTHERWISE SPECIFIED
DRAFTING PER ASME Y14.5M-1994
DIMENSIONS ARE IN INCHES [MILLIMETERS]

.XX [X.X] ±	.015 [0.38]
.XXX [X.XX] ±	.005 [0.13]
ANGLES ±	1°
SURFACE FINISH	125 [3.2]

THIRD ANGLE PROJECTION

CURRENT ISSUE	DATE
DRAWN ETD	08/05/14
CHECKED TVM	08/21/14
MFG ENG -	-
APPROVED DGP	-
ISSUED BTC	-

TITLE: VALVE

SIZE	DWG NO.	REV
B	157740-16	1

SCALE 2:1 | EST. WT. 0.02 LBS | SHEET 1 OF 1

PROTO/QUOTE