DRAWING REVISION INFORMATION			
REV	DESCRIPTION	DRAWN BY	ISSUE DATE
E	ECN06346; REMOVED NOTE PERMITTING OPTIONAL CONSTRUCTION OF RELIEF, ∅.620 [15.76] REF WAS ∅.637 [16.19], .047 [1.20] WAS .050 [1.27], ADDED R.016 [0.40] & 35° DIMS	BTC	06/25/14

此區域表面D必須要平坦。
R角不能超過尺寸A

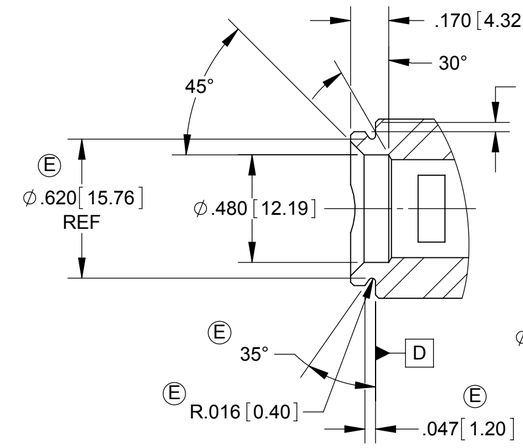

SECTION Z-Z

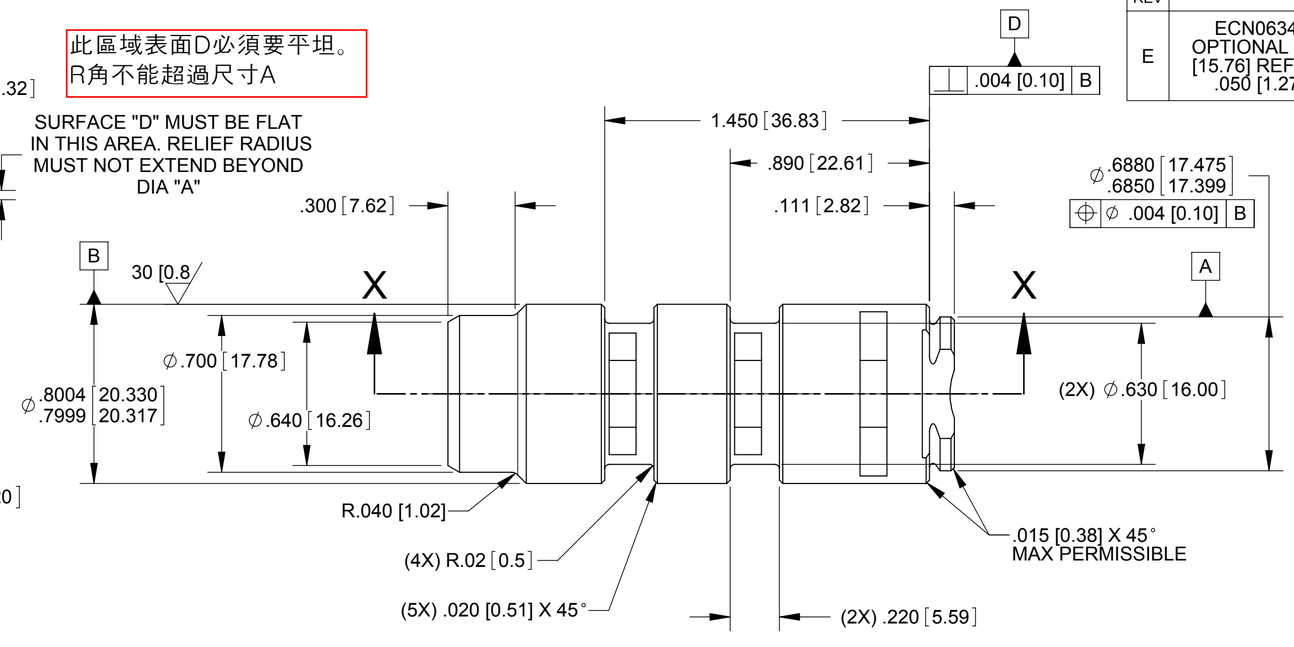

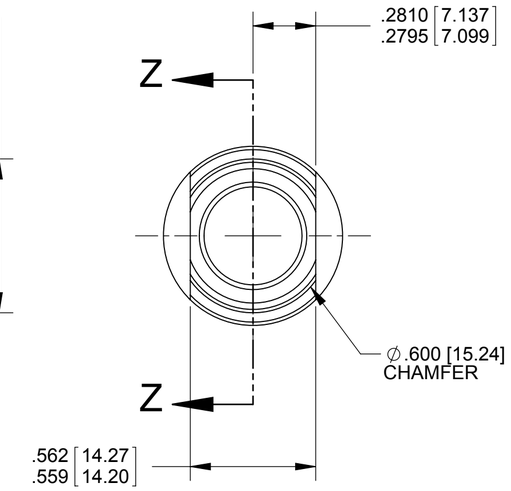

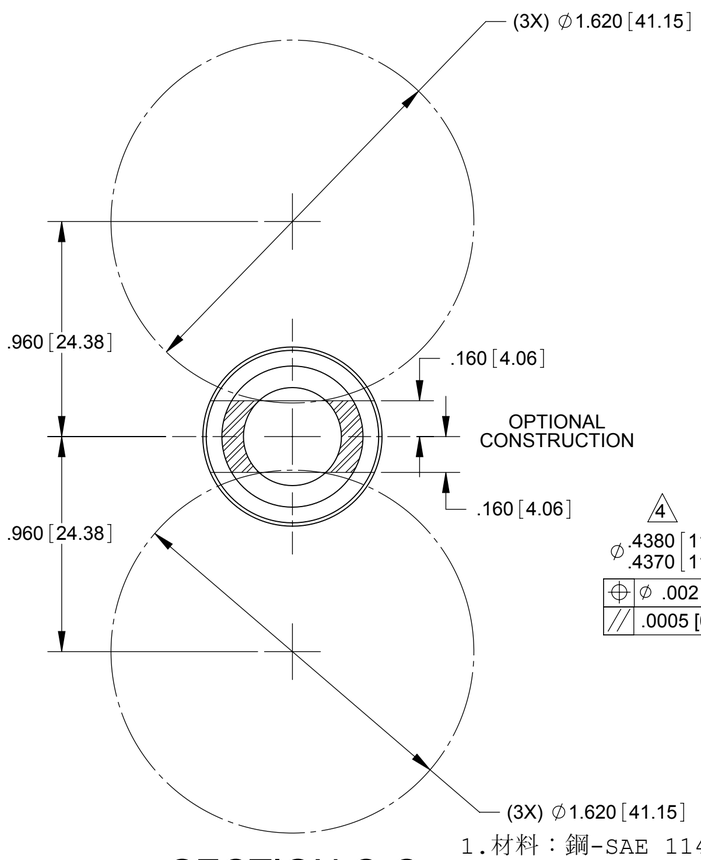

SECTION C-C

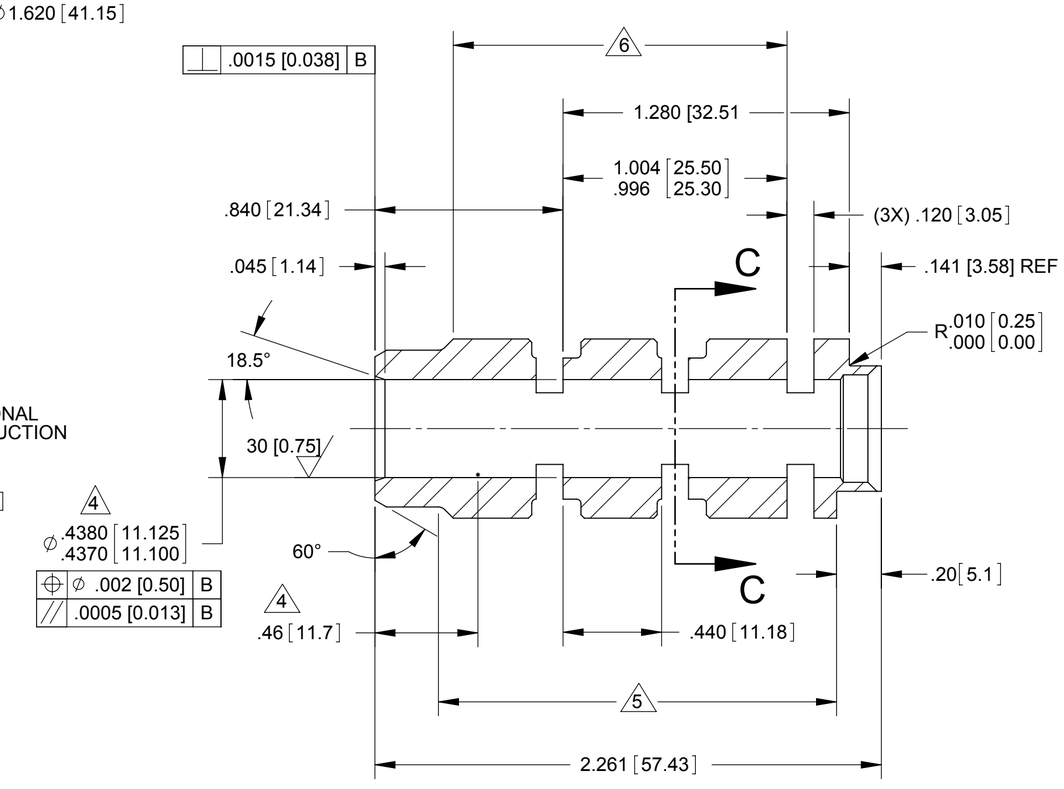

SECTION X-X

NOTES:

1. MATERIAL: STEEL - SAE 1144/C-11L44 OR 11L41 MODIFIED PER ASTM A311 CLASS B
2. YIELD STRENGTH 100,000 PSI MIN
3. HARDNESS: ROCKWELL B 90 MIN, AVAILABLE AS "STRESSPROOF"
4. SPECIFIED GEOMETRICAL PARAMETERS NEED TO BE MAINTAINED FOR DISTANCE SHOWN
5. HEAT EFFECTED ZONE MUST NOT EXCEED SPECIFIED DISTANCE
6. INDUCTION HARDEN, QUENCH AND DRAW TO OBTAIN A SURFACE HARDNESS OF ROCKWELL C55 MIN FOR A MAX DEPTH OF .100 [2.54] ON DIA "B" FOR DISTANCE SHOWN

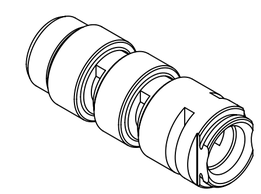

1.材料：鋼-SAE 1144/C-11L44或是11L41 依照ASTM A311 CLASS B
2.強度 100,000 PSI MIN
3.硬度：羅克維爾 B 90 min, 需耐壓力
4.指定的幾何參數需要像表示出的距離那樣維持住
5.熱處理的區域不能超過指定的區域
6.感應硬化, 淬火以得到表面硬度 羅克維爾C55 MIN, 尺寸B的最大厚度0.100 (2.54)

KEY CHARACTERISTIC SYMBOLS
Cr CRITICAL
Ma MAJOR

UNLESS OTHERWISE SPECIFIED
DRAFTING PER ASME Y14.5M-1994
DIMENSIONS ARE IN INCHES [MILLIMETERS]
.XX [X.X] ± .015 [0.38]
.XXX [X.XX] ± .005 [0.13]
ANGLES ± 1°
SURFACE FINISH 63 [1.6]
THIRD ANGLE PROJECTION

CURRENT ISSUE	DATE
DRAWN NDV	07/02/04
CHECKED BTC	11/07/05
MFG ENG -	-
APPROVED DGP	08/07/13
ISSUED PRJ	08/08/13

TITLE: SLEEVE
SIZE C | DWG NO. 350SLVE | REV E
SCALE 2:1 | EST. WT. 0.17 LBS | SHEET 1 OF 1

APPROVED