DRAWING REVISION INFORMATION			
REV	DESCRIPTION	DRAWN BY	ISSUE DATE
-	ORIGINAL ISSUE	JLB	04/25/14
-	REV- IS EQUAL TO PROTO/QUOTE REV 2	JLB	04/25/14

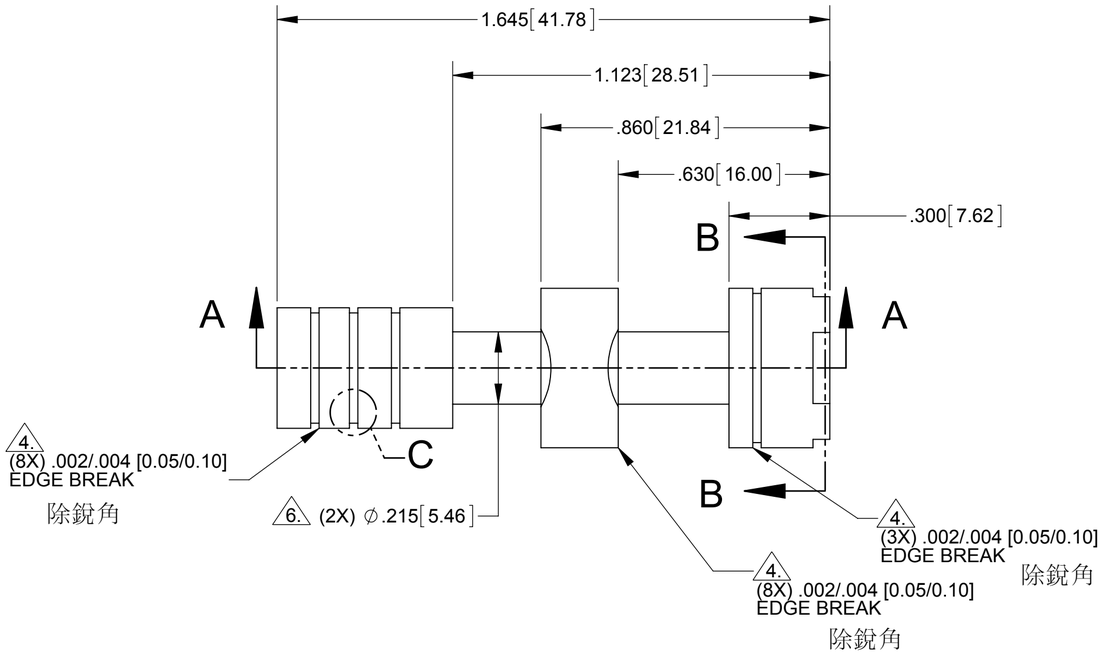

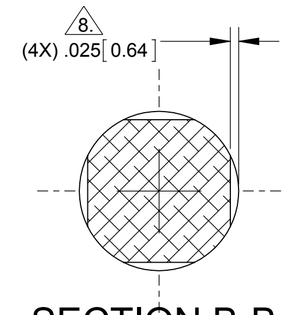

SECTION B-B
SCALE 3 : 1

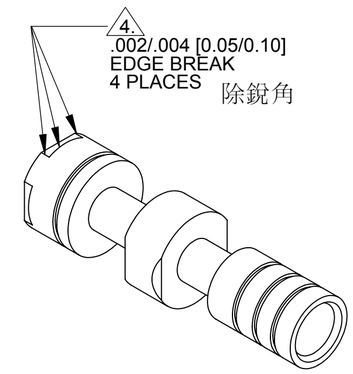

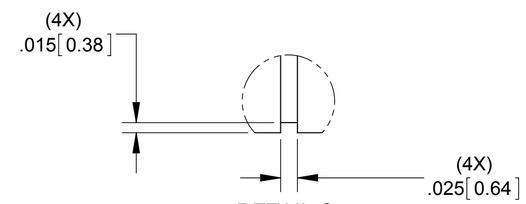

DETAIL C
SCALE 6 : 1

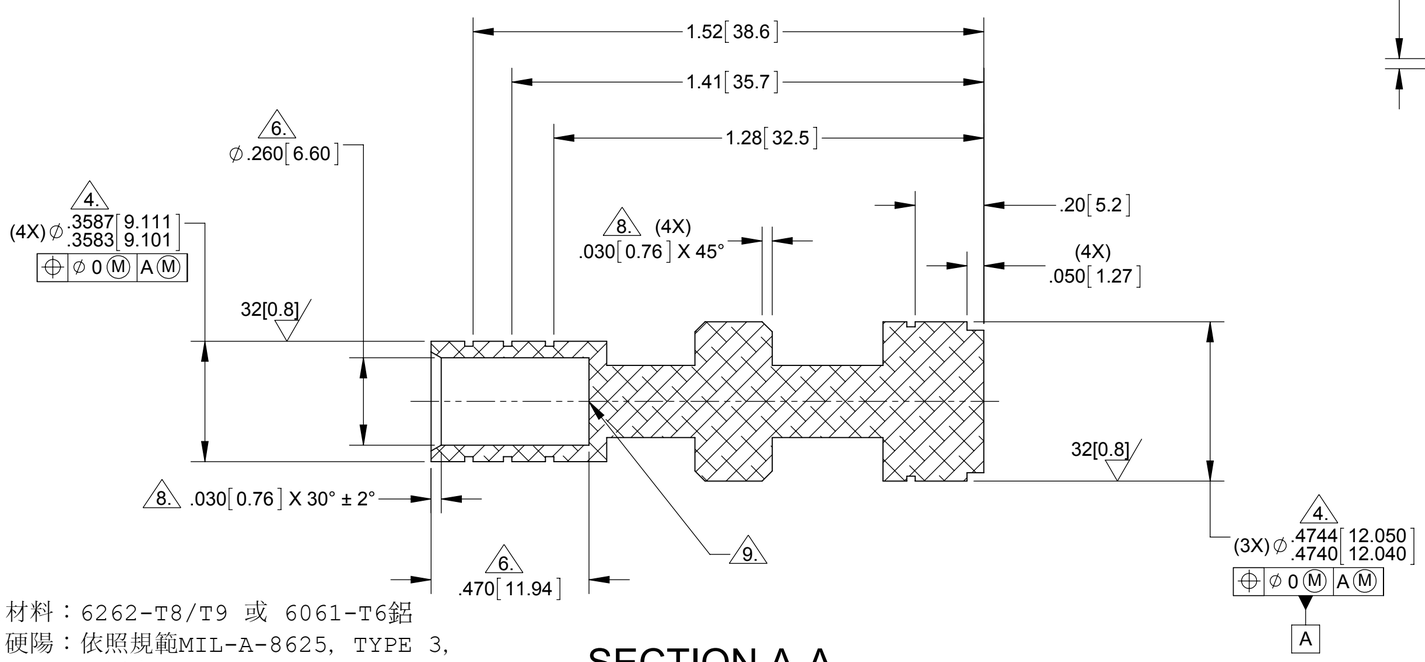

SECTION A-A
SCALE 3 : 1

NOTES:

1. MATERIAL, 6262-T8/T9 OR 6061-T6 ALUMINUM
2. HARD ANODIZE TO YIELD .0008±.0004 [0.02±0.01] BUILD-UP PER SURFACE, PER MIL-A-8625, TYPE III, CLASS 2
3. ALL DIMENSIONS APPLY AFTER ANODIZING
4. SHARP EDGES WILL NOT BE TOLERATED
5. BREAK/RADIUS UNSPECIFIED EDGES/CORNERS, .02 [0.5] MAX
6. CONTACT POINTS PERMITTED ON THIS DIAMETER.
7. REMOVE BURRS
8. NO ANGULAR RELATIONSHIP TO FEATURE
9. CENTER DRILL PERMISSABLE THIS END ONLY

1.材料：6262-T8/T9 或 6061-T6鋁
2.硬陽：依照規範MIL-A-8625, TYPE 3, CLASS 2, 厚度.0008+/-.0004[0.02+/-0.01]
3.所有尺寸都是陽極之後
4.不允許有銳角
5.除銳角, 未指定R角, .02[0.5] MAX
6.允許在此尺寸上有接觸點
7.除毛邊
8.與角度關係不需要
9.中心點僅允許在底部

KEY CHARACTERISTIC SYMBOLS
Cr CRITICAL
Ma MAJOR

UNLESS OTHERWISE SPECIFIED
DRAFTING PER ASME Y14.5M-1994
DIMENSIONS ARE IN INCHES [MILLIMETERS]
.XX [X.X] ± .015 [0.38]
.XXX [X.XX] ± .005 [0.13]
ANGLES ± 1°
SURFACE FINISH 125 [3.2]
THIRD ANGLE PROJECTION

CURRENT ISSUE	DATE
DRAWN JLB	11/20/13
CHECKED DGP	11/22/13
MFG ENG -	-
APPROVED DGP	04/24/14
ISSUED PRJ	04/25/14

TITLE: VALVE, TCC REGULATOR

SIZE C | DWG NO. 124740-24 | REV -
SCALE 2:1 | EST. WT. 0.014 LBS | SHEET 1 OF 1

APPROVED