DRAWING REVISION INFORMATION			
REV	DESCRIPTION	DRAWN BY	ISSUE DATE
F	ECN06436; REVISED & RE-NUMBERED GENERAL NOTES & ASSOCIATED SYMBOLS, INCORPORATED PREVIOUS NOTES 2 & 3 INTO NOTE 1, ADDED NEW NOTE 5 & ASSOCIATED SYMBOLS, ADDED "(2X)" TO R.010/.000 [0.25/0.00]	BTC	10/09/14

此區域表面D必需要平坦,
R角不能超過尺寸A

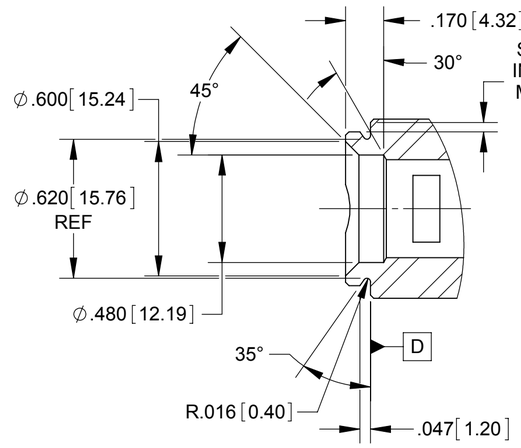

SECTION Z-Z

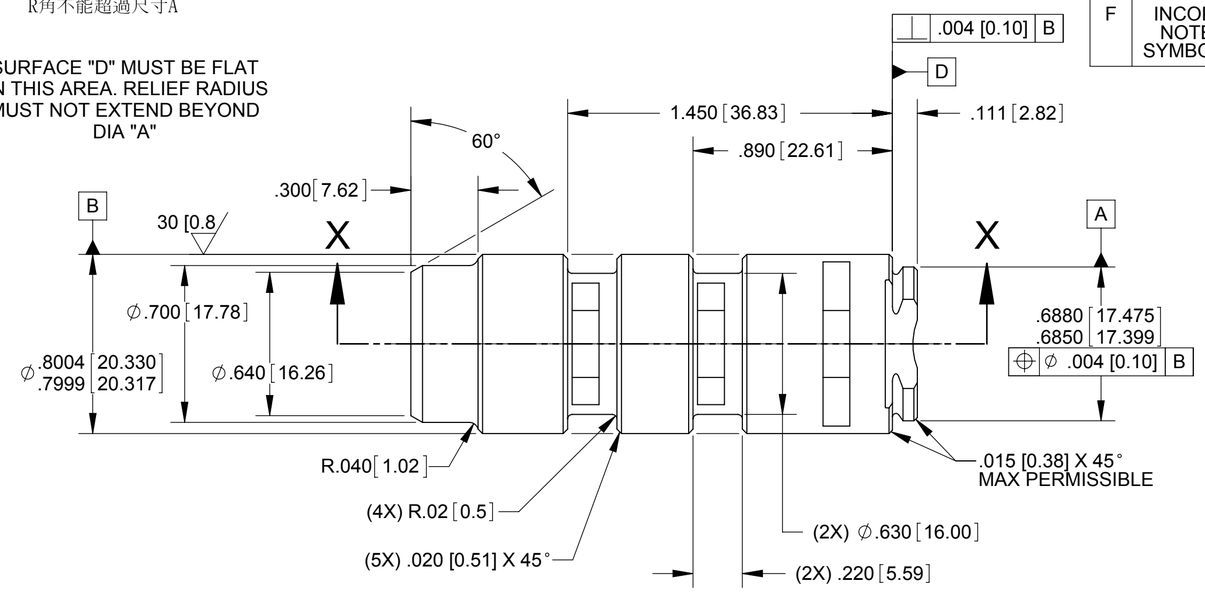

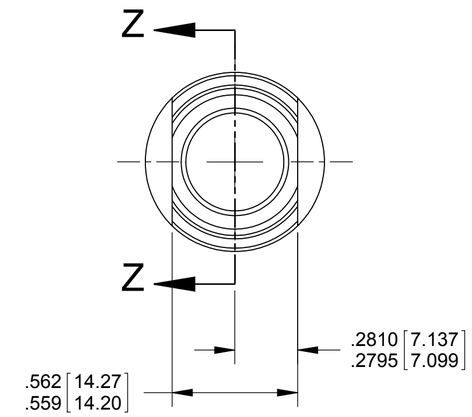

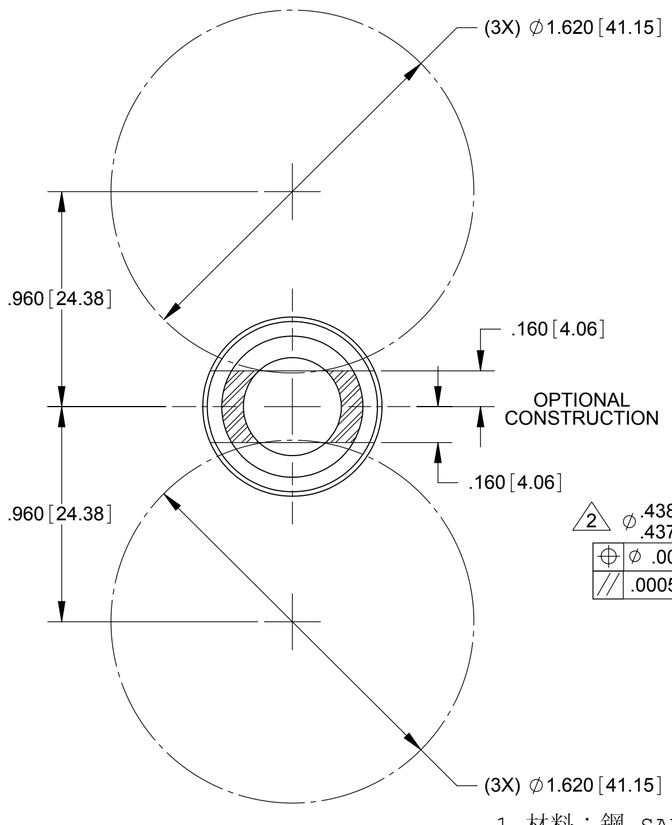

SECTION C-C

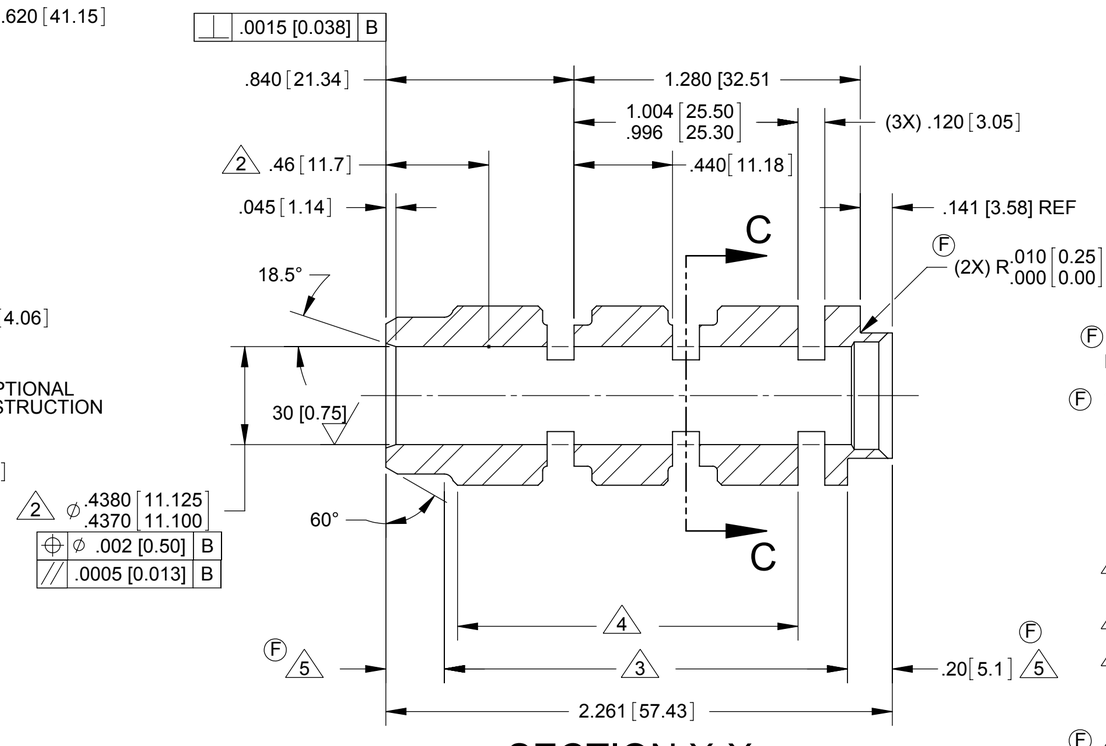

SECTION X-X

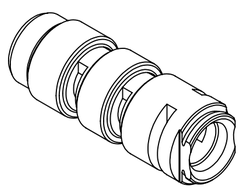

F NOTES:

F 1. MATERIAL: SAE 1144, C-11L44 OR 11L41 STEEL, MODIFIED PER ASTM A311 CLASS B

YIELD STRENGTH: 100,000 PSI [690 MPa] MIN

HARDNESS: HRB 90 MIN

AVAILABLE AS "STRESSPROOF"

2. SPECIFIED GEOMETRICAL PARAMETERS NEED TO BE MAINTAINED FOR DISTANCE SHOWN

3. HEAT AFFECTED ZONE MUST NOT EXCEED SPECIFIED DISTANCE

4. INDUCTION HARDEN, QUENCH AND TEMPER TO OBTAIN A SURFACE HARDNESS OF HRC 55 MIN FOR A MAX DEPTH OF .100 [2.54] ON DIA B FOR DISTANCE SHOWN

F 5. MATERIAL HARDNESS NOT TO EXCEED HRC 24 BEYOND HEAT AFFECTED ZONE

1.材料：鋼-SAE 1144/C-11L44或是11L41 依照ASTM A311 CLASS B
強度 100,000 PSI MIN
硬度：羅克維爾 B 90 min, 需耐壓力
2.指定的幾何參數需要像表示出的距離那樣維持住
3.熱處理的區域不能超過指定的區域
4.感應硬化, 淬火以得到表面硬度 羅克維爾C55 MIN
尺寸B的最大厚度0.100 (2.54)
5.材料的硬度不可超過HRC24,超出熱影響範圍

KEY CHARACTERISTIC SYMBOLS
Cr CRITICAL
Ma MAJOR

UNLESS OTHERWISE SPECIFIED
DRAFTING PER ASME Y14.5M-1994
DIMENSIONS ARE IN INCHES [MILLIMETERS]
.XX [X.X] ± .015 [0.38]
.XXX [X.XX] ± .005 [0.13]
ANGLES ± 1°
SURFACE FINISH 63 [1.6]
THIRD ANGLE PROJECTION

CURRENT ISSUE	DATE
DRAWN NDV	07/02/04
CHECKED BTC	11/07/05
MFG ENG -	-
APPROVED BAW	11/08/05
ISSUED PRJ	11/08/05

TITLE: SLEEVE

SIZE C | DWG NO. 350SLVE | REV F

SCALE 2:1 | EST. WT. 0.17 LBS | SHEET 1 OF 1

APPROVED