DRAWING REVISION INFORMATION			
REV	DESCRIPTION	DRAWN BY	ISSUE DATE
3	REVISED: Ø4.00 [101.6] WAS Ø3.76 [95.3], Ø2.90 [73.7] WAS Ø2.84 [72.1], 15° WAS 15° REF, 10.81 [274.6] WAS 9.06 [230.1], 3.31 [84.1] WAS 2.00 [50.8] REF, Ø3.31 [84.1] WAS Ø3.38 [85.9] REF, Ø2.885 [73.28] WAS Ø2.925 [74.30], .34 [8.6] WAS .38 [9.7], .17 [4.3] WAS .18 [4.6] ADDED: Ø2.858 [72.59], Ø2.8137/2.8125 [71.468/71.438], 2.44 [62.0], .237/.232 [6.02/5.89], 1.205 [30.61], (4X) R.005 [0.13] MAX, .03 [0.8] X 30° CHAMFER, (2X) SHARP CORNERS, Ø2.900 [73.66] X 40° CHAMFER, .09 [2.3] X 45° CHAMFER, 2.44 [62.0] REF REMOVED: .09 [2.3] X 30° CHAMFER, .50 [12.7] DIM, ALTERNATE MATERIAL T33-125-350-02F (NOTE 1), Ø3.62 [91.9], 7.87 [199.9], R.44 [11.2]	BTC	02/20/13

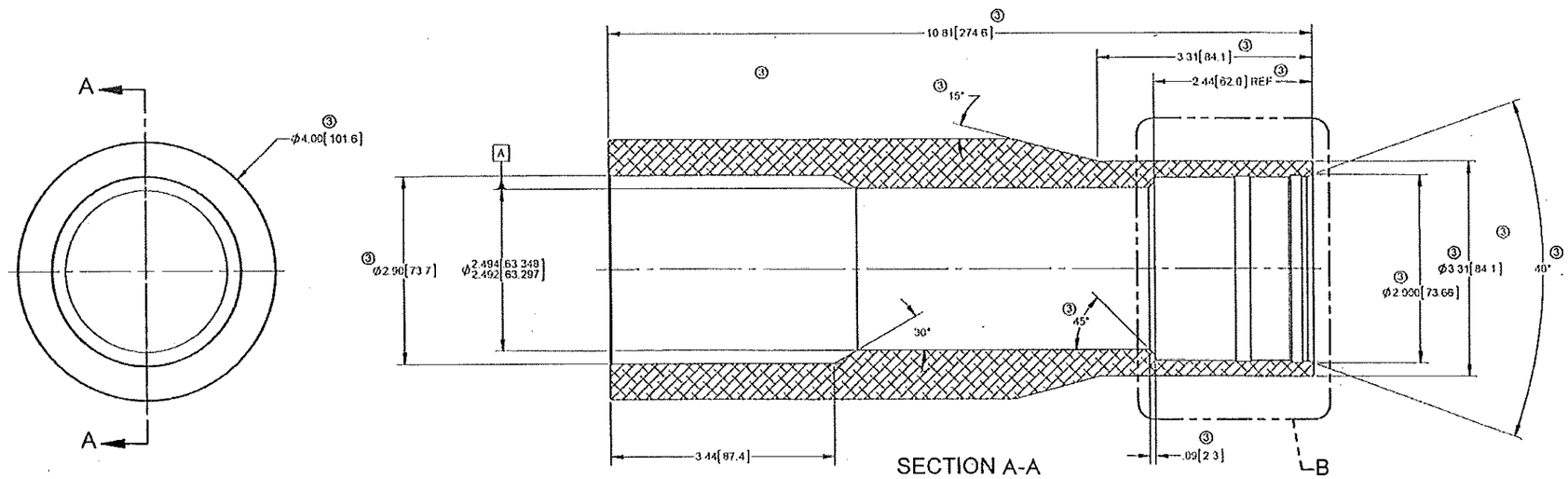

SECTION A-A

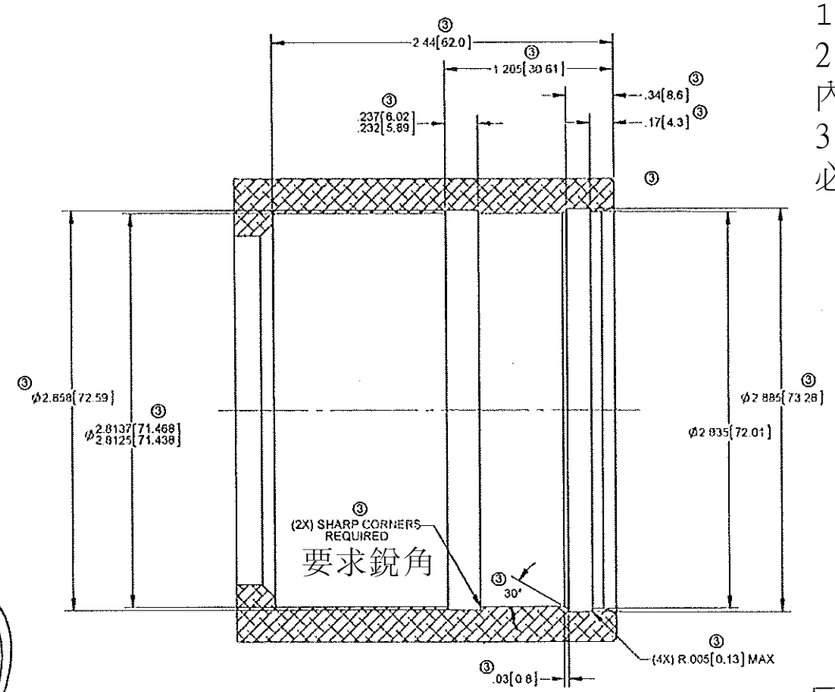

DETAIL B
SCALE 2 : 1

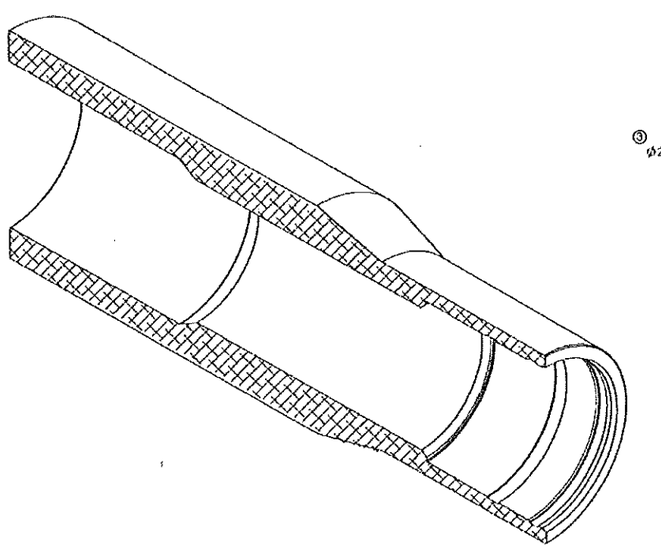

1.材料：6061-T6或是6061-T651 鋁圓棒
2.除非特別指定，除銳角 0.02"[0.5]MAX，
內部R角 R0.02 (R0.5)MAX
3.除非特別指定，所有尺寸同軸於A，
必須要符合以下規格：圓偏轉度 0.005"[0.13] A

NOTES:

3 1. MATERIAL: 6061-T6 OR 6061-T651 ALUMINUM ROUND BAR
2. UNLESS OTHERWISE SPECIFIED, BREAK SHARP EDGES .02 [0.5] MAX, RADIUS INSIDE CORNERS R.02 [R0.5] MAX
3. UNLESS OTHERWISE SPECIFIED, ALL DIAMETERS COAXIAL TO A MUST MEET THE FOLLOWING SPECIFICATION:

⌖ .005 [0.13] A

UNLESS OTHERWISE SPECIFIED	DRAWN	BTC	12/03/12
	UNCHECKED	BTC	02/20/13
	APPROVED	SFM	
	APPROVED	PRJ	

TITLE: BLANK, SLEEVE

SIZE D | DWG NO T33-125-350-02B | REV 3

SCALE 1:1 | WT 5.63 LBS | SHEET 1 OF 1

PROTO/QUOTE