DRAWING REVISION INFORMATION			
REV	DESCRIPTION	DRAWN BY	ISSUE DATE
-	ORIGINAL ISSUE	JLB	03/04/14
-	APPROVED REV - IS EQUAL TO PROTO/QUOTE REV 1	JLB	03/04/14

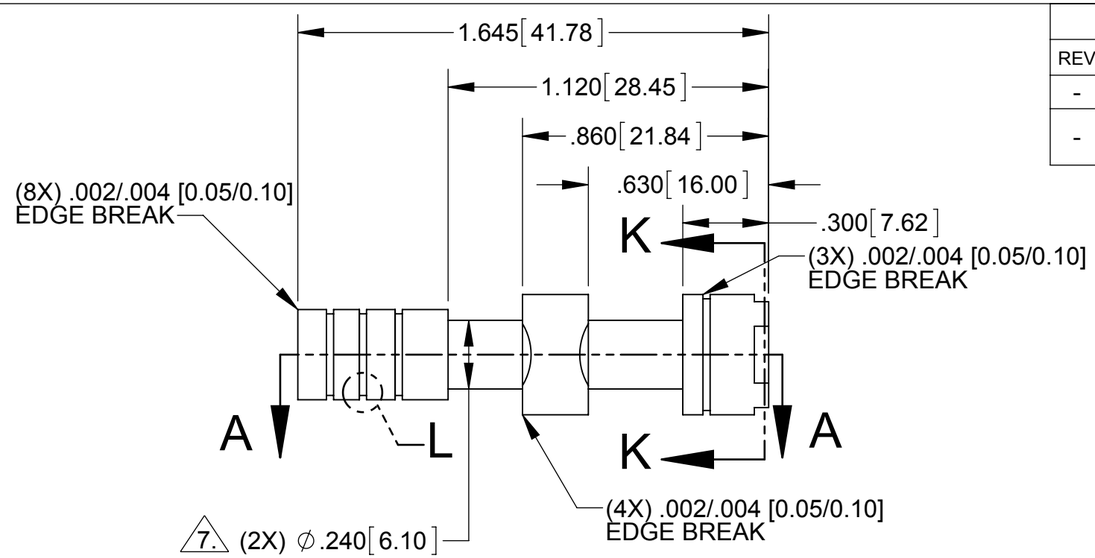

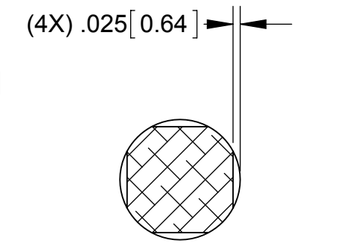

SECTION K-K

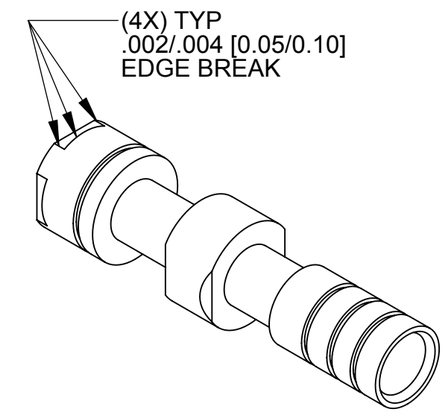

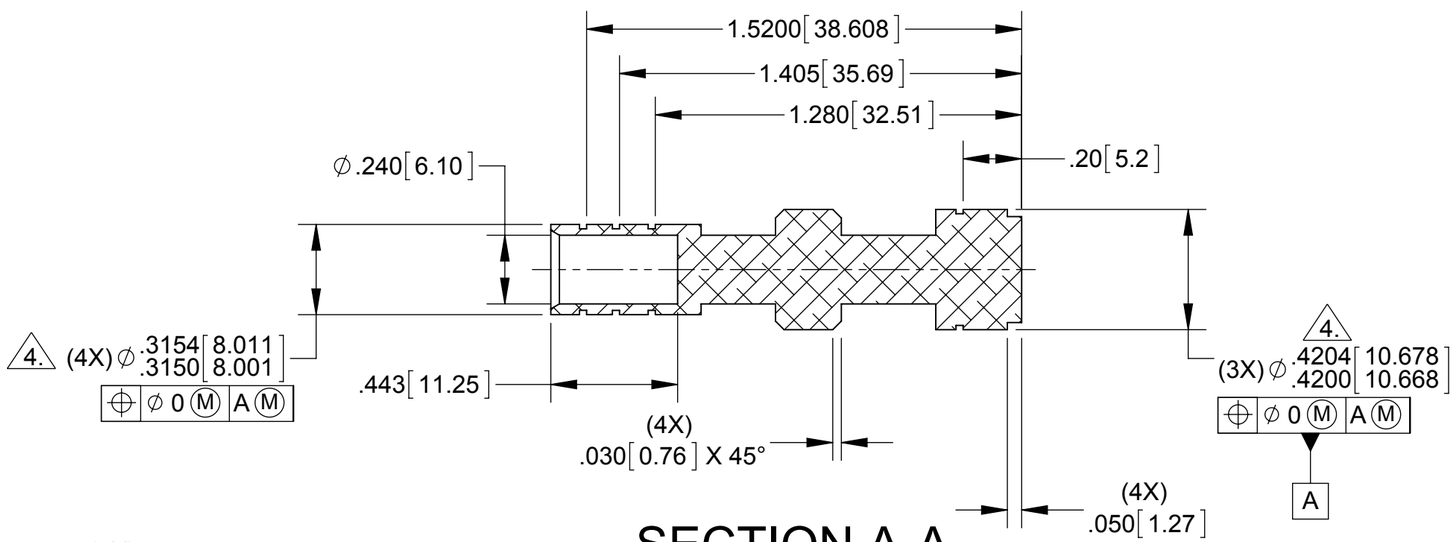

SECTION A-A

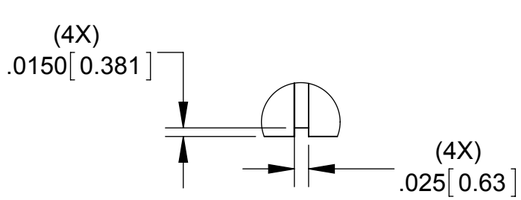

DETAIL L
SCALE 4 : 1

NOTES:

1. MATERIAL, 6262-T8/T9 OR 6061-T6 ALUMINUM
2. HARD ANODIZE TO YIELD .0008±.0004 [0.02±0.01] BUILD-UP PER SURFACE, PER MIL-A-8625, TYPE III, CLASS 2
3. ALL DIMENSIONS APPLY AFTER ANODIZING
4. SHARP EDGES WILL NOT BE TOLERATED
5. BREAK/RADIUS UNSPECIFIED EDGES/CORNERS, .02 [0.5] MAX
6. CENTER DRILL PERMISSIBLE, BOTH ENDS, ∅.045 [1.14] MAX
7. CONTACT POINTS PERMITTED ON THIS DIAMETER.
8. REMOVE BURRS

APPROVED

UNLESS OTHERWISE DESIGNATED BY WAY OF SYMBOLS, KEY CHARACTERISTIC REQUIREMENTS SHALL BE GOVERNED BY SONNAX GUIDELINE:

SON-ENG-GL-02

KEY CHARACTERISTIC SYMBOLS

Cr CRITICAL — Ma MAJOR

UNLESS OTHERWISE SPECIFIED

DRAFTING PER ASME Y14.5M-1994
DIMENSIONS ARE IN INCHES [MILLIMETERS]

.XX [X.X] ± .015 [0.38]
.XXX [X.XX] ± .005 [0.13]
ANGLES ± 1°
SURFACE FINISH 125 [3.2]

THIRD ANGLE PROJECTION

	CURRENT ISSUE	DATE
DRAWN	JLB	10/07/13
CHECKED	MMC	10/10/13
MFG ENG	-	-
APPROVED	DGP	03/04/14
ISSUED	PRJ	03/04/14

TITLE: VALVE, TCC REGULATOR

SIZE: B | DWG NO.: 144740-16 | REV: -

SCALE: 2:1 | EST. WT.: 0.012 LBS | SHEET: 1 OF 1

C:\Working\144740-16.SLDDRW Tuesday, March 04, 2014 3:11:55 PM prj