DRAWING REVISION INFORMATION			
REV	DESCRIPTION	DRAWN BY	ISSUE DATE
-	ORIGINAL ISSUE	MJS	??/??/??

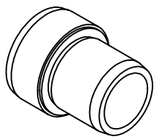

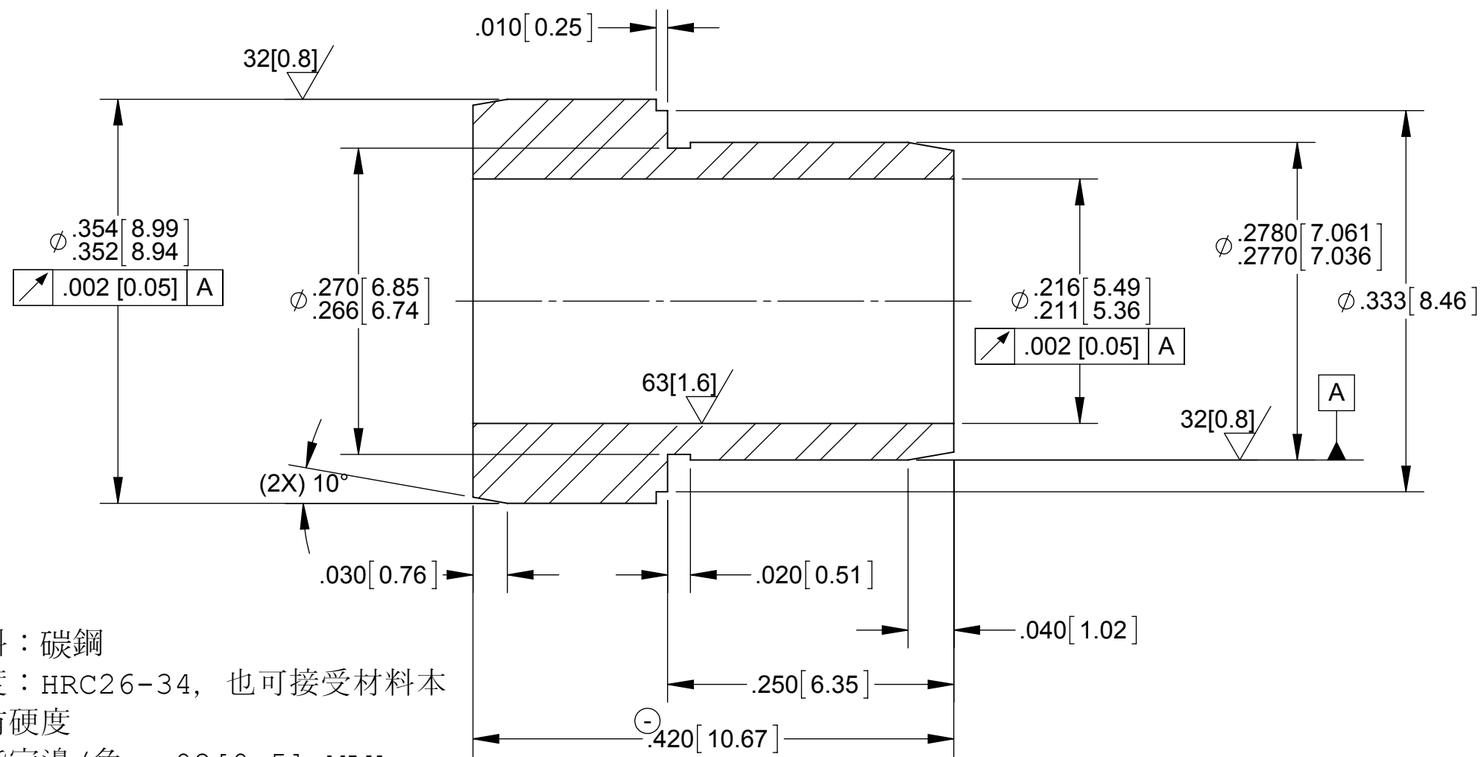

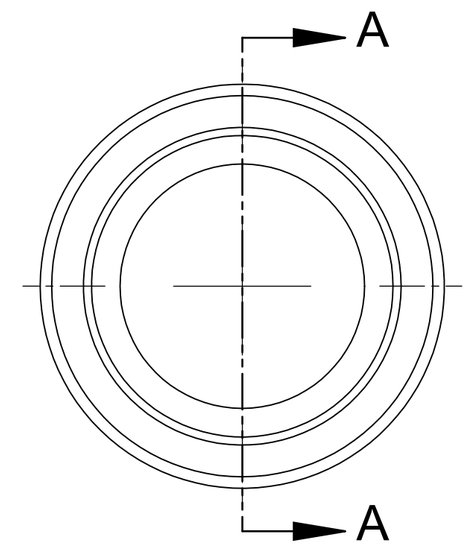

1.材料：碳鋼
2.硬度：HRC26-34, 也可接受材料本身有硬度
3.未指定邊/角, .02[0.5] MAX
4.除毛邊

SECTION A-A

NOTES:

1. MATERIAL: CARBON STEEL
2. HARDNESS: HRC 26-34. PRE-HARDENED MATERIAL ACCEPTABLE.
3. UNSPECIFIED EDGES/CORNERS, .02 [0.5] MAX
4. REMOVE BURRS

KEY CHARACTERISTIC SYMBOLS

Cr — CRITICAL

Ma — MAJOR

UNLESS OTHERWISE SPECIFIED
DRAFTING PER ASME Y14.5M-1994
DIMENSIONS ARE IN INCHES [MILLIMETERS]

.XX [X.X] ± .015 [0.38]
.XXX [X.XX] ± .005 [0.13]
ANGLES ± 1°
SURFACE FINISH 125 [3.2]

THIRD ANGLE PROJECTION

CURRENT ISSUE	DATE
DRAWN MJS	10/30/12
CHECKED XXX	-
MFG ENG -	-
APPROVED SFM	-
ISSUED PRJ	-

TITLE: SEAL, VALVE

SIZE	DWG NO.	REV
B	10003-21	-

SCALE 8:1 | EST. WT. 0.00 LBS | SHEET 1 OF 1

PRELIMINARY