Projet SAE.31
GNU Radio et Adalm Pluto

Transmission et réception de signaux

Ugo Souillard
Roman Negrila

SOMMAIRE

Thème 1 - Transmettre et recevoir avec GNUradio

Thème 2 - Recevoir et émettre avec GNUradio et Adalm pluto

Difficultés rencontrées

Conclusion

THÈME 1 :
TRANSMETTRE ET RECEVOIR AVEC GNURADIO

EMETTEUR AM

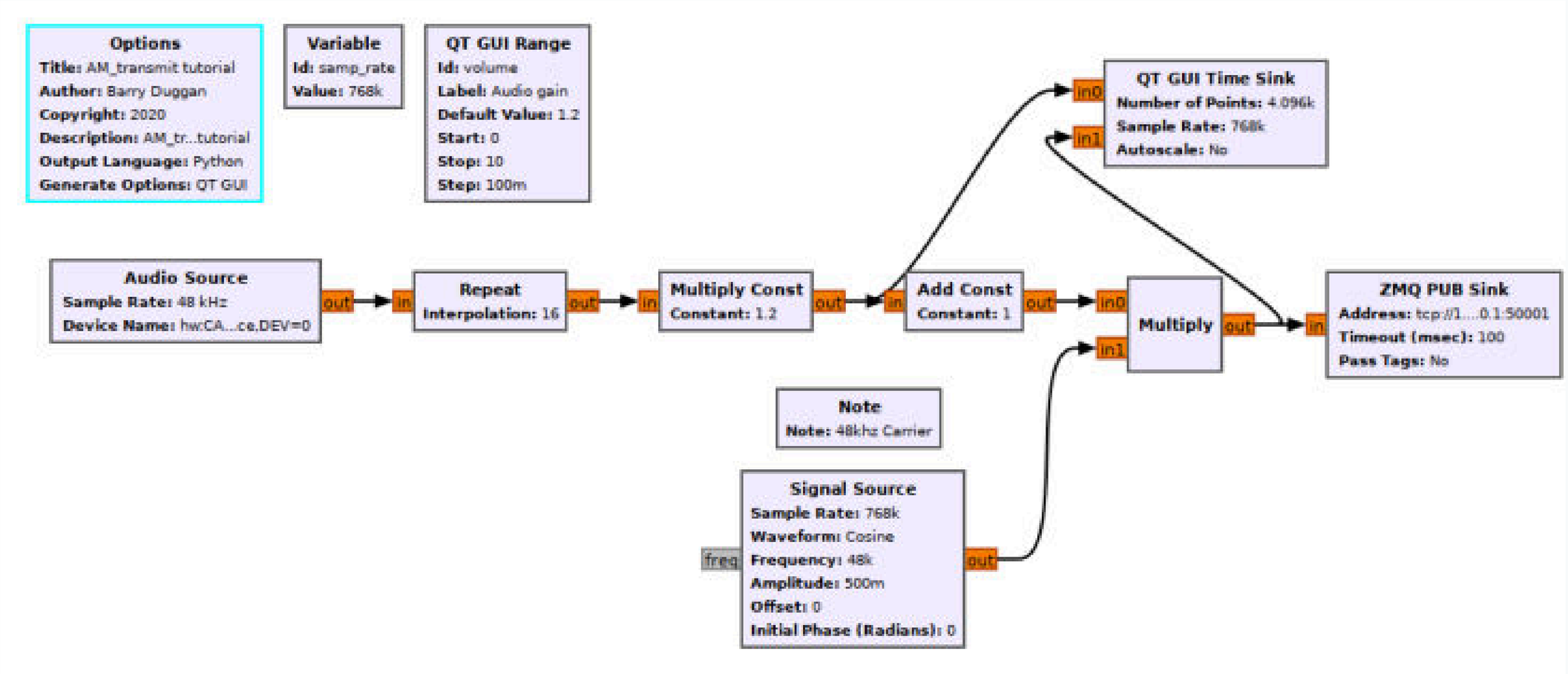
Options
Title: AM_transmit tutorial
Author: Barry Duggan
Copyright: 2020
Description: AM_tr...tutorial
Output Language: Python
Generate Options: QT GUI
Variable
Id: samp_rate
Value: 768k
QT GUI Range
Id: volume
Label: Audio gain
Default Value: 1.2
Start: 0
Stop: 10
Step: 100m
QT GUI Time Sink
Number of Points: 4.096k
Sample Rate: 768k
Autoscale: No
in0
in1
Audio Source
Sample Rate: 48 kHz
Device Name: hw:CA...ce,DEV=0
out
in
Repeat
Interpolation: 16
Multiply Const
Constant: 1.2
Add Const
Constant: 1
Multiply
ZMQ PUB Sink
Address: tcp://1...0.1:50001
Timeout (msec): 100
Pass Tags: No
Note
Note: 48khz Carrier
Signal Source
Sample Rate: 768k
Waveform: Cosine
Frequency: 48k
Amplitude: 500m
Offset: 0
Initial Phase (Radians): 0
freq

RECEPTEUR AM

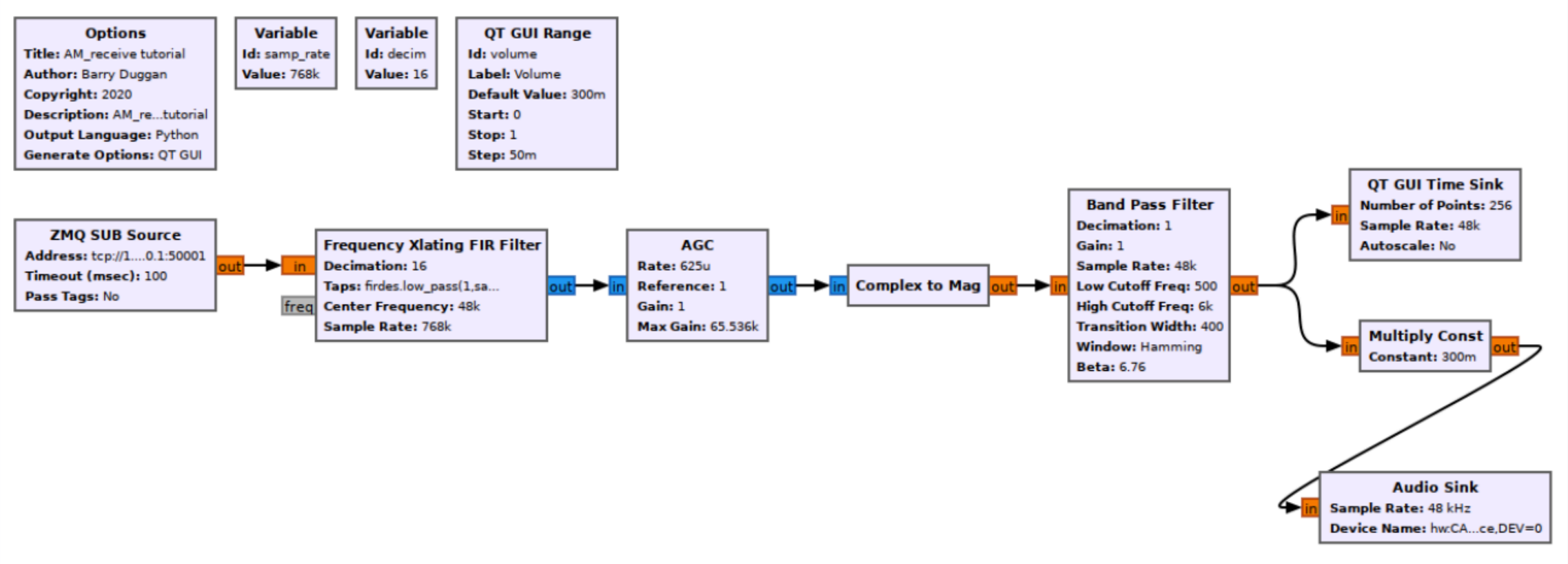

COMMUNICATION

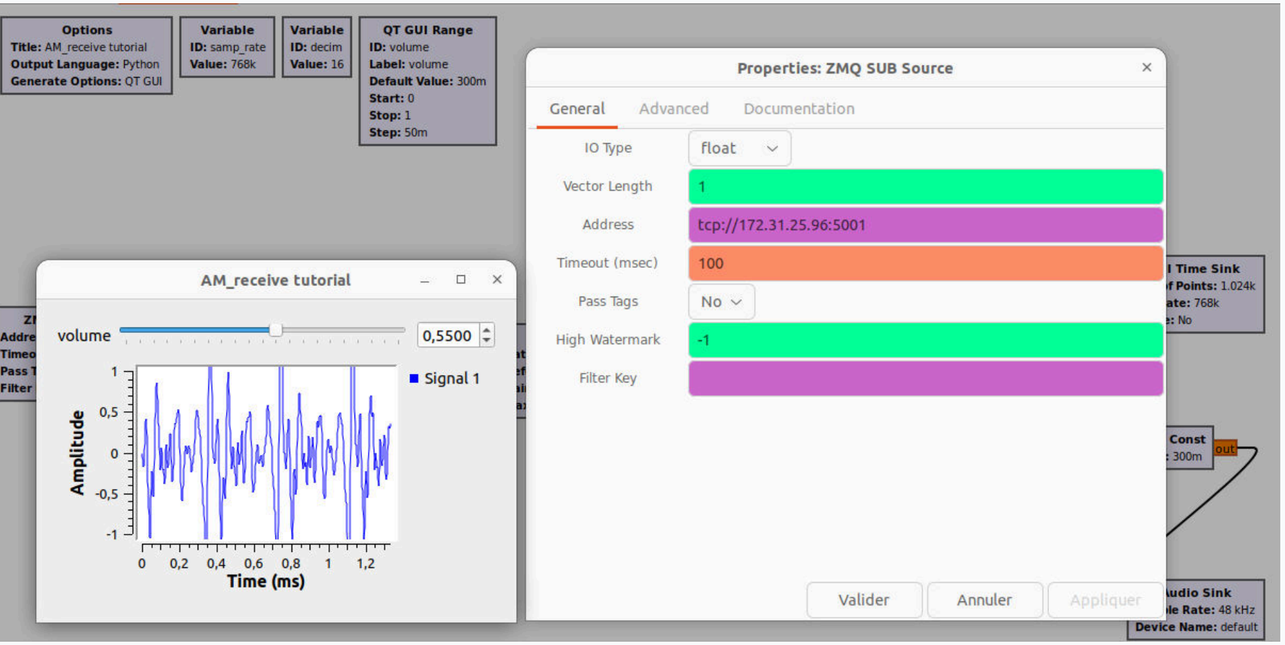

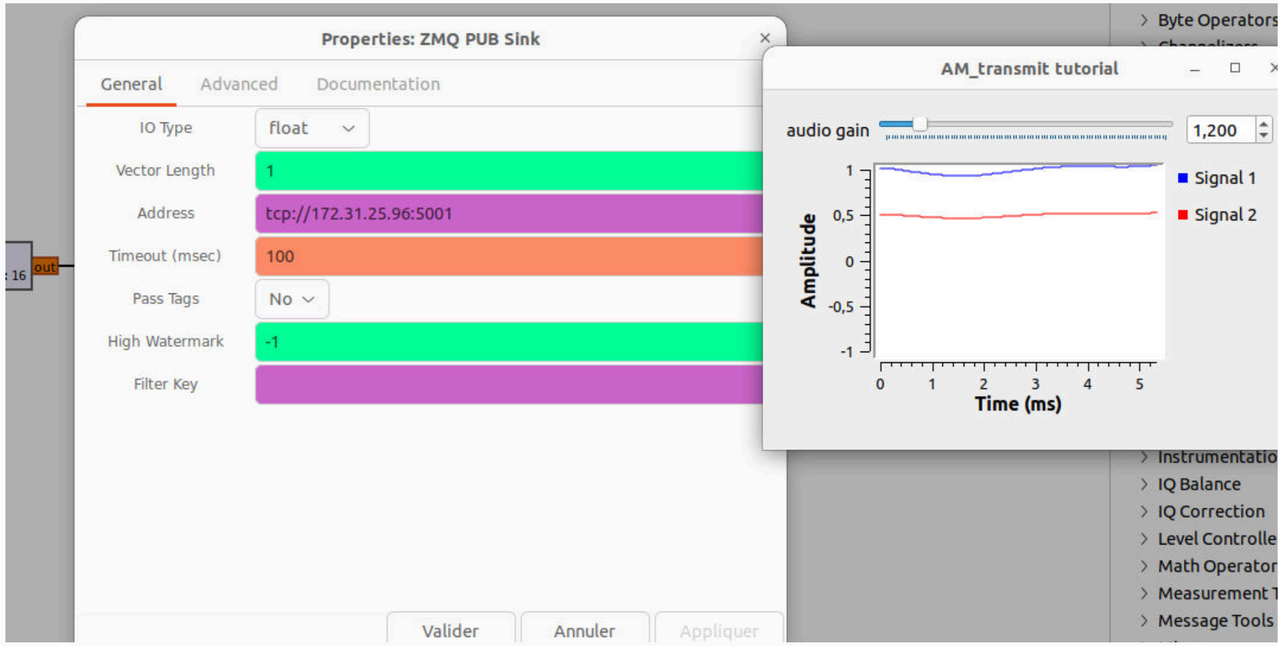

EMETTEUR AM

RECEPTEUR AM

THÈME 2 :
RECEVOIR ET ÉMETTRE
AVEC GNURADIO ET ADALM PLUTO

RECEPTION FM

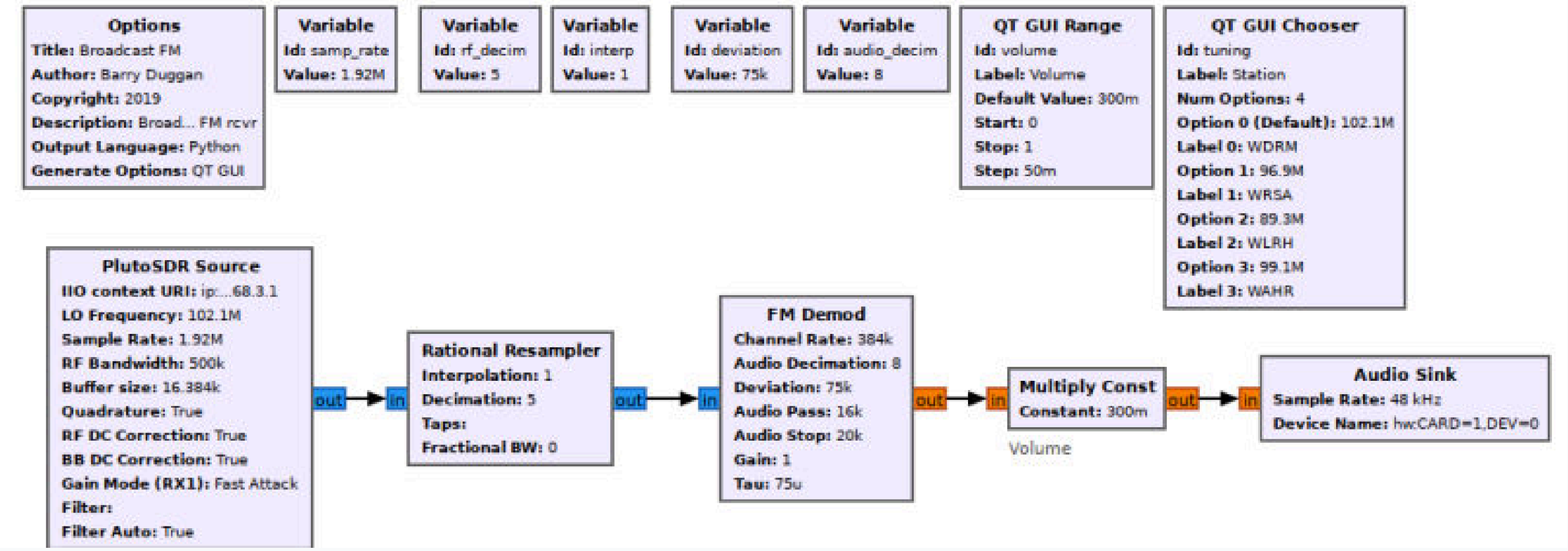

DIFFICULTÉS RENCONTRÉES

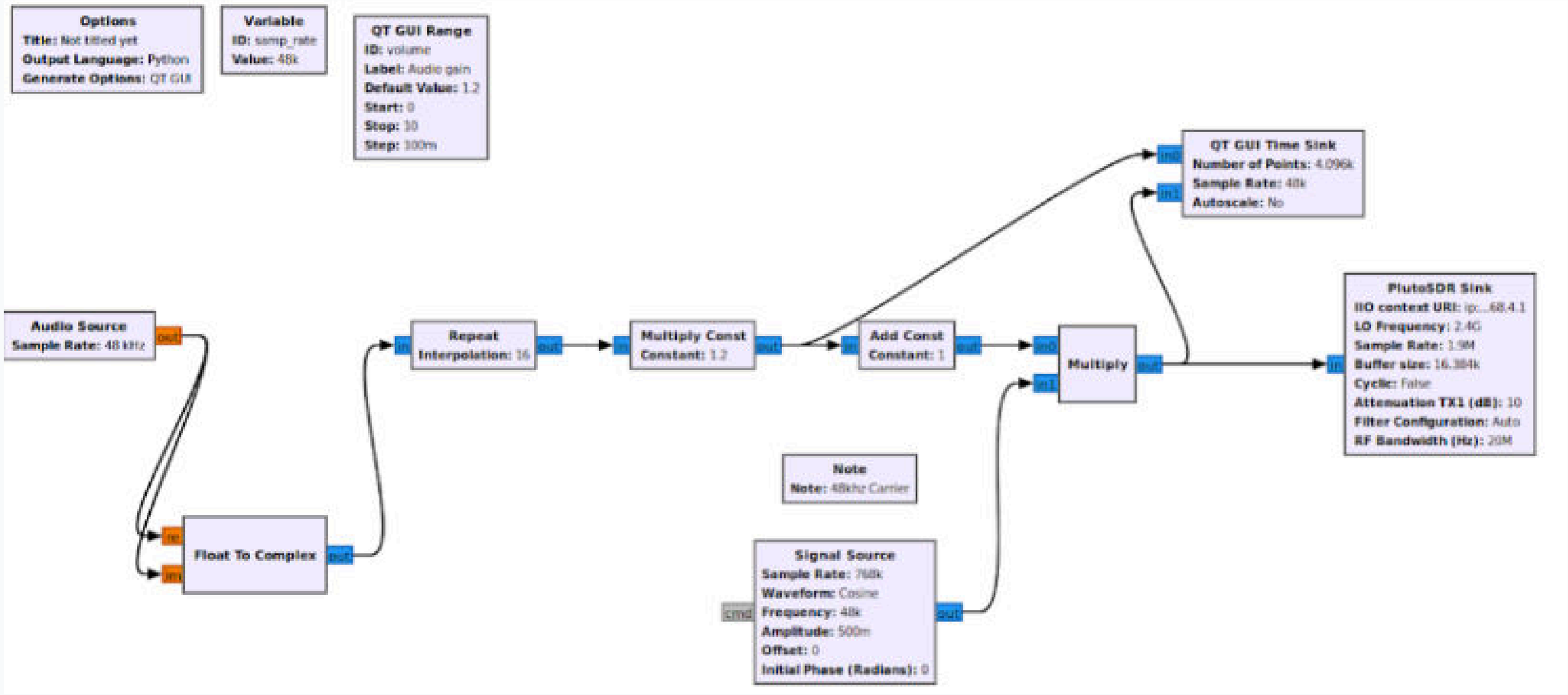
Options
Title: Not titled yet
Output Language: Python
Generate Options: QT GUI
Variable
ID: samp_rate
Value: 48k
QT GUI Range
ID: volume
Label: Audio gain
Default Value: 1.2
Start: 0
Stop: 10
Step: 100m
QT GUI Time Sink
Number of Points: 4.096k
Sample Rate: 48k
Autoscale: No
Audio Source
Sample Rate: 48 kHz
out
Repeat
Interpolation: 16
Multiply Const
Constant: 1.2
Add Const
Constant: 1
Multiply
PlutoSDR Sink
IIO context URI: ip:...68.4.1
LO Frequency: 2.4G
Sample Rate: 1.9M
Buffer size: 16.384k
Cyclic: False
Attenuation TX1 (dB): 10
Filter Configuration: Auto
RF Bandwidth (Hz): 20M
Float To Complex
Note
Note: 48khz Carrier
Signal Source
Sample Rate: 768k
Waveform: Cosine
Frequency: 48k
Amplitude: 500m
Offset: 0
Initial Phase (Radians): 0
cmd

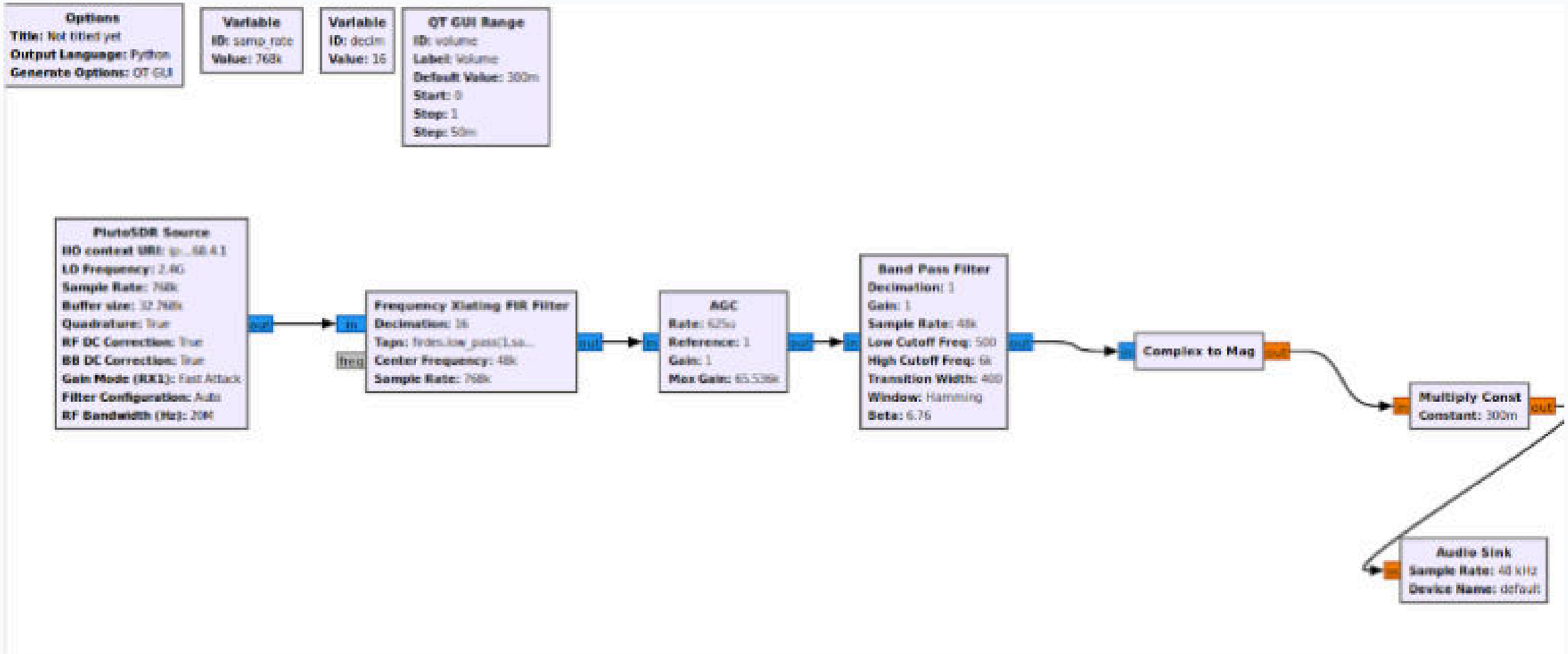
Options
Title: Not titled yet
Output Language: Python
Generate Options: QT GUI
Variable
ID: samp_rate
Value: 768k
Variable
ID: decim
Value: 16
QT GUI Range
ID: volume
Label: Volume
Default Value: 300m
Start: 0
Stop: 1
Step: 50m
Pluto/SDR Source
IIO context URI: ip:...68.4.1
LO Frequency: 2.4G
Sample Rate: 768k
Buffer size: 32.768k
Quadrature: True
RF DC Correction: True
BB DC Correction: True
Gain Mode (RX1): Fast Attack
Filter Configuration: Auto
RF Bandwidth (Hz): 20M
out
in
freq
Frequency Xlating FIR Filter
Decimation: 16
Taps: firdes.low_pass(1,sa...
Center Frequency: 48k
Sample Rate: 768k
out
in
AGC
Rate: 625u
Reference: 1
Gain: 1
Max Gain: 65.536k
out
in
Band Pass Filter
Decimation: 1
Gain: 1
Sample Rate: 48k
Low Cutoff Freq: 500
High Cutoff Freq: 6k
Transition Width: 400
Window: Hamming
Beta: 6.76
out
in
Complex to Mag
out
in
Multiply Const
Constant: 300m
out
in
Audio Sink
Sample Rate: 48 kHz
Device Name: default

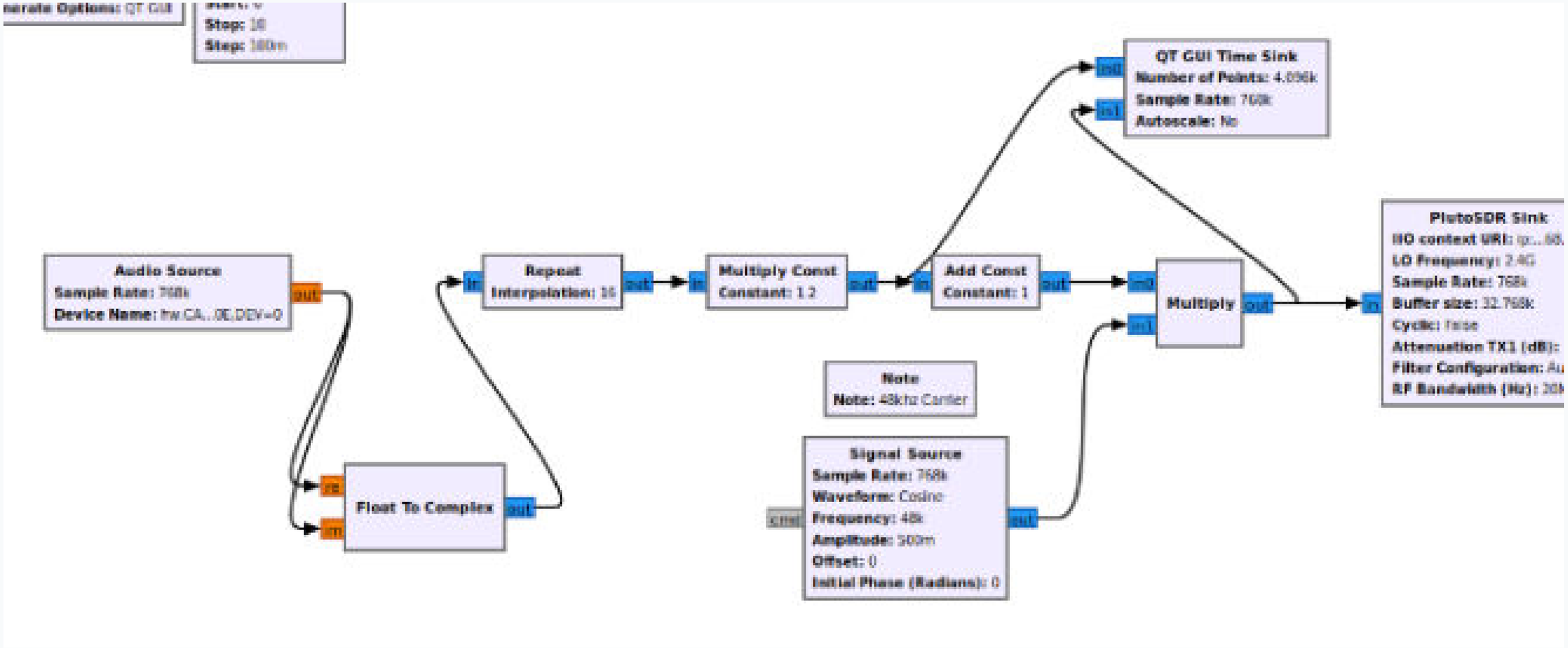
Step: 10
Audio Source
Sample Rate: 768k
Device Name: hw:CA...0E,0DV=0
out
re
im
Float To Complex
out
in
Repeat
Interpolation: 16
out
in
Multiply Const
Constant: 1.2
out
in
Add Const
Constant: 1
out
in0
in1
Multiply
out
in0
in1
QT GUI Time Sink
Number of Points: 4.096k
Sample Rate: 768k
Autoscale: No
in
PlutoSDR Sink
IIO context URI:
LO Frequency: 2.4G
Sample Rate: 768k
Buffer size: 32.768k
Cyclic: false
Attenuation TX1 (dB):
Filter Configuration:
RF Bandwidth (Hz):
Note
Note: 48khz Carrier
Signal Source
Sample Rate: 768k
Waveform: Cosine
Frequency: 48k
Amplitude: 500m
Offset: 0
Initial Phase (Radians): 0
out

CONCLUSION

Ugo Souillard
Roman Negrila