Hardware Design Implementation for Secure Superconducting Quantum Computers

Theodoros Trochatos, Sanjay Deshpande, and Jakub Szefer

Computer Architecture and Security Lab, Electrical Engineering, Yale University

I. Introduction

Quantum computing represents a paradigm shift in computational capabilities, promising breakthroughs in cryptography, optimization, and simulation. However, the potential of quantum computing is accompanied by significant security concerns, particularly in the context of superconducting quantum machines. These machines, while offering remarkable computational power, are vulnerable to various forms of attacks due to their sensitivity to external interference.

In response to this need, we present a novel hardware architecture designed to protect quantum circuits in superconducting machines from security threats. By integrating encryption, decryption, randomization, and hardware security mechanisms, our mitigation scheme offers a comprehensive solution for ensuring the integrity and confidentiality of quantum computations. Our proposal aims to demonstrate the effectiveness of our design in safeguarding quantum circuits, thereby advancing the state-of-the-art in hardware-oriented security for quantum computing.

II. Research Description

Our research introduces a comprehensive hardware solution aimed at safeguarding quantum circuits from potential attacks. The mitigation mechanism employs a combination of encryption, decryption, randomization, and hardware security mechanisms to ensure the confidentiality of quantum computations [1], [2]. The architecture is designed to withstand post-quantum security threats, making it suitable for practical deployment in quantum computing environments. The architecture comprises several key components, each playing a crucial role in ensuring the security of quantum circuits. The overall workflow of our approach is depicted in Figure 2.

The block diagram of our software and hardware design is shown in Figure 1. The *Crypto Engine* and *Bitmap Memory* facilitate the decryption of encrypted input bitmaps and their storage within the quantum computing environment. The *Crypto Engine* assumes that there is a shared secret key established for secure communication and uses it to decrypt input bitmaps while preserving their integrity against potential attacks. Furthermore, the *Bitmap Memory* ensures that decrypted secrets remain secure from probing while residing within the quantum computer's fridge, thereby minimizing the risk of unauthorized access.

The *Main controller* module orchestrates the secure execution of quantum circuits by controlling input to attenuation switches and cryptographic mechanisms. By interfacing with

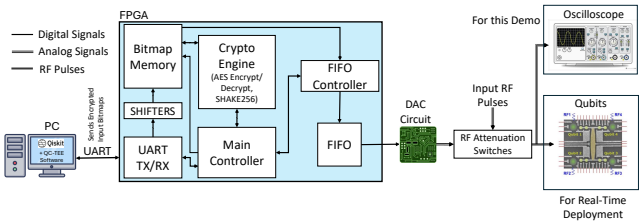

Fig. 1: Block diagram of the complete QC-TEE design.

the *Crypto Engine* and *Bitmap memory*, the *Main Controller* ensures that control signals are appropriately attenuated to prevent unauthorized manipulation of quantum states. Additionally, the hardware security engine facilitates the randomization of circuit outputs using a pseudo-random number generator (PRNG), enhancing the unpredictability and security of quantum computations.

The *Attenuation Switches* play a critical role in enforcing security policies within the quantum computing environment. By selectively attenuating control pulses, the attenuation switches prevent adversaries from tampering with quantum states and compromising the integrity of quantum computations. Utilizing GaAs-based RF switches capable of operating at cryogenic temperatures, our design ensures reliable and efficient control of attenuation mechanisms.

Finally, the *AES Encrypt* from *Crypto Engine* and *PRNG* enhance the confidentiality and integrity of quantum computations by encrypting output bitmaps and introducing randomization mechanisms. The encryption engine safeguards sensitive information against unauthorized access, while the *PRNG* introduces randomness into circuit outputs to mitigate potential attacks. The schematic of the FPGA design implemented on Xilinx Vivado 2023.2 targeting Xilinx Artix 7 FPGA (`xc7a35tcpg236-1` is shown in Figure 3).

III. Demonstration Overview

The proposed hardware demo will showcase the functionality and effectiveness of our mitigation mechanism in protecting quantum circuits. The demonstration will include:

- Graphics depicting the experimental setup, including the placement of our design components, as shown in Figure 4.
- Specific features targeted in the demo, such as the hardware security engine, attenuation switches, encryption engine, and pseudo-random number generator (PRNG).
- Description of observables, including the controlled attenuation of decoy control pulses and the encryption of output bitmaps.

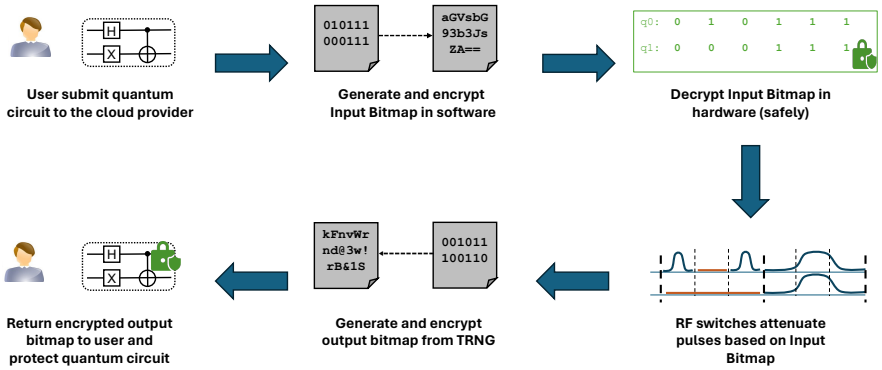

Fig. 2: Workflow of the steps followed during software and hardware.

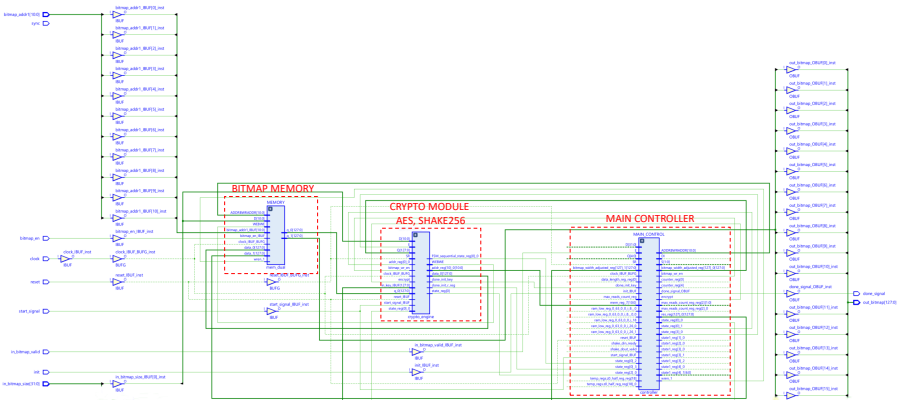

Fig. 3: The schematic of the FPGA design for Core QC-TEE (Bitmap Memory, Crypto Engine, and Main Controller) extracted from Xilinx Vivado 2023.2 targeting Xilinx Artix 7 FPGA (`xc7a35tcpg236-1`).

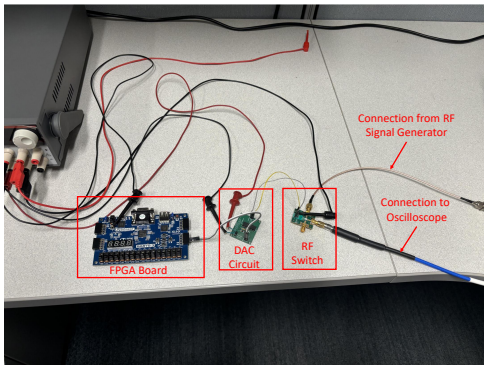

Fig. 4: Demonstration of the actual design, depicting the hardware prototype.

- Expected outcomes, including the preservation of quantum circuit confidentiality.

IV. Experimental Setup

Experimental setup consists of the following components:

- Attenuation switches to control the attenuation of decoy control pulses.
- Hardware security engine, encryption engine, and PRNG mounted on the high-temperature stage of the fridge.
- Control logic to ensure timely execution of security protocols.
- Implementation of GaAs-based RF switches capable of functioning at cryogenic temperatures with low insertion loss and high isolation.

V. Expected Results

During the demonstration, audience can expect to observe:

- Controlled attenuation of decoy control pulses by the hardware security engine, as instructed by the input bitmap on an oscilloscope.
- Encryption of output bitmaps to ensure the confidentiality of quantum computation results on the PC.
- Real-time operation of our design components, demonstrating their effectiveness in protecting quantum circuits from security threats, as it is shown in Figure 4.

VI. Conclusion

The proposed hardware demonstration represents a significant advancement in hardware-oriented security for quantum computing. By showcasing the functionality and effectiveness of our hardware architecture design, we aim to contribute to the development of secure quantum computing systems.

References

[1] Theodoros Trochatos, Chuanqi Xu, Sanjay Deshpande, Yao Lu, Yongshan Ding, and Jakub Szefer. Hardware architecture for a quantum computer trusted execution environment, 2023.

[2] Theodoros Trochatos, Chuanqi Xu, Sanjay Deshpande, Yao Lu, Yongshan Ding, and Jakub Szefer. A quantum computer trusted execution environment. *IEEE Computer Architecture Letters*, 22(2):177–180, 2023.