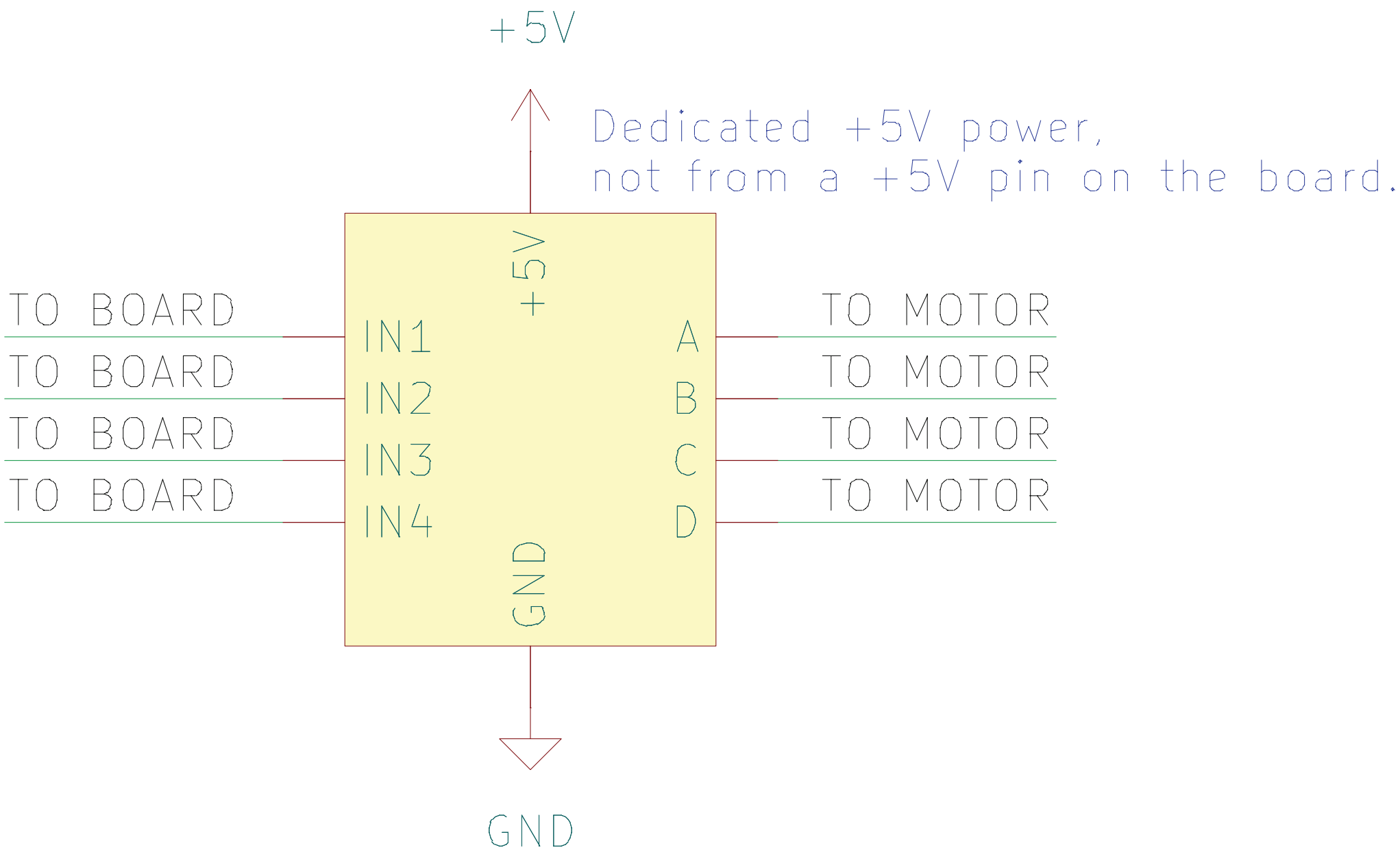
+5V
Dedicated +5V power,
not from a +5V pin on the board.
+5V
TO BOARD
TO BOARD
TO BOARD
TO BOARD
IN1
IN2
IN3
IN4
A
B
C
D
TO MOTOR
TO MOTOR
TO MOTOR
TO MOTOR
GND
GND