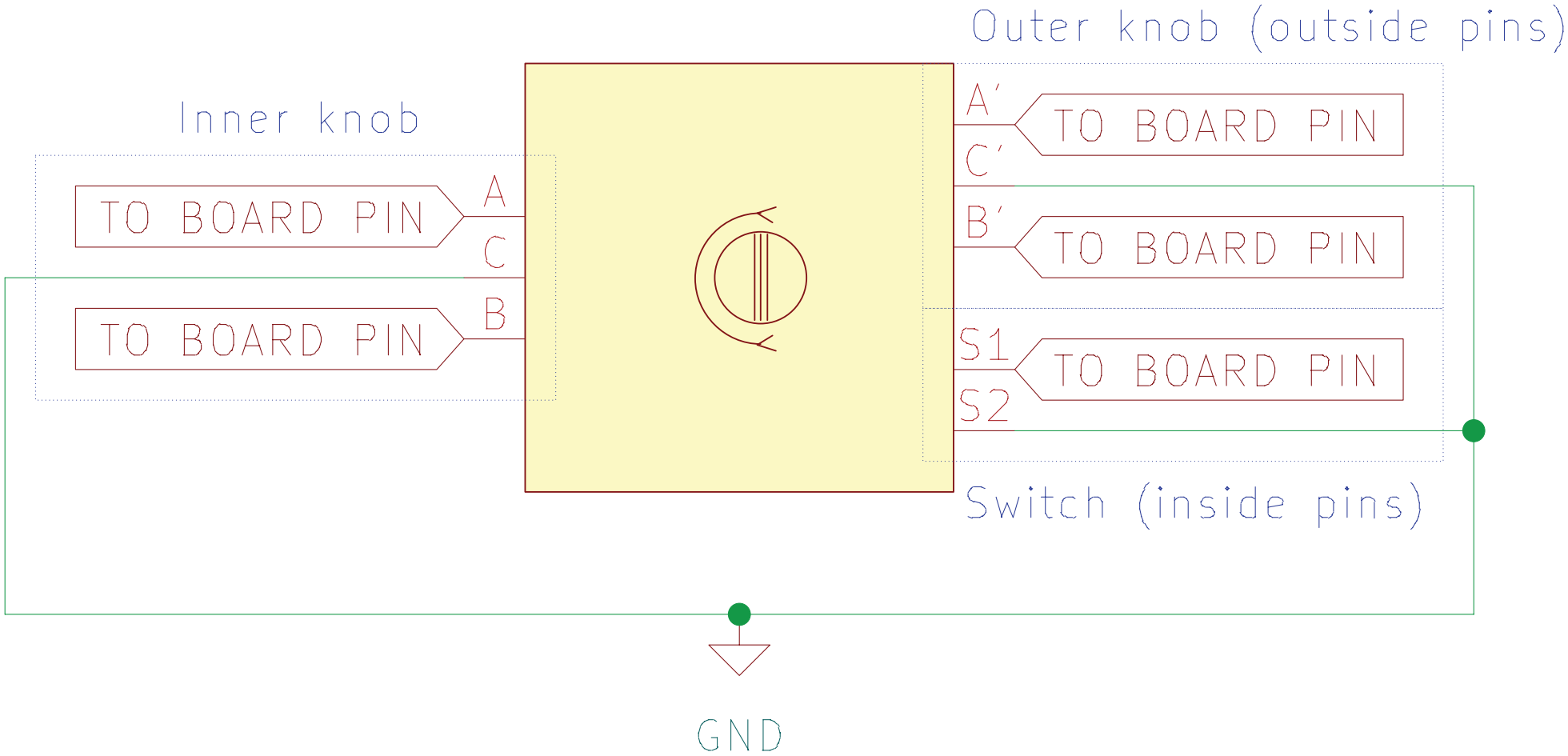
Outer knob (outside pins)
Inner knob
TO BOARD PIN
A
C
TO BOARD PIN
B
A'
C'
TO BOARD PIN
B'
TO BOARD PIN
S1
S2
TO BOARD PIN
Switch (inside pins)
GND