Save As | Print | Dist Statement | Full Screen Mode | Reset Form | EO Help | V-1.6 | EMail To: For Signatures

ENGINEERING ORDER

1. ENGINEERING ORDER NO.: 2021A0059-T
2. RELEASE DATE: 2021-03-11

3. DWG TITLE: YAW ELECTRICAL CONTROL UNIT
4. DWG ODA CAGE CODE: 017N4
5. DWG NO.: 1925900-3
6. DOC TYPE:
7. NEXT HIGHER ASSY:
8. USED ON: B-52
9. OPR CAGE CODE: 98748
10. DWG SIZE: E
11. DWG SHEET(s) AFFECTED: 0001
12. LATEST DWG REV:

13. TYPE OF ENGINEERING ORDER
- [ ] ADVANCE ENGINEERING CHANGE ORDER (AECO) AGAINST AIR FORCE OWNED DRAWINGS
- [ ] DEVIATION AUTHORIZED
- [x] CHANGE NOTICE ENGINEERING ORDER (CNEO) AIR FORCE CHANGES BEING INCORPORATED
- [ ] INFORMATION "NON-TECHNICAL"
- [ ] ADVANCED ENGINEERING SUPPLEMENTAL ORDER (AESO) AIR FORCE REQUIREMENTS AGAINST A VENDOR OWNED DRAWING

14. REASONS FOR CHANGE
- [x] ERROR CORRECTION
- [ ] DESIGN CHANGE
- [ ] DRAWING CLARIFICATION
- [ ] UPDATED DRAWING
- [ ] CRITICAL SAFETY ITEM (CSI)
- [ ]

23. DISPOSITION OF SPARES: [ ] N/A [ ] REWORK [ ] SCRAP [ ] REPLACE [ ]

26. DOCUMENTS AFFECTED (TO/TCTO/SPEC/OTHER)
5A8-14-13-3 and 5A8-14-13-4

29. OTHER COMMENTS
This EO corrects the DWG ODA CAGE Code

	SIGNATURE	OFFICE SYM / PHONE		SIGNATURE	OFFICE SYM / PHONE
15. EO PREPARED BY	HOANG.LONG.K.1232215298 Digitally signed by HOANG.LONG.K.1232215298 Date: 2021.03.03 15:02:17 -06'00'	422 SCMS/GUEA (405) 582-5342	16. DWG CHANGED BY		
17. CONFIG MANAGEMENT			18. MATERIALS ENGINEER		
19. CHECKER	ELDEN.MARK.E.JR.1228787902 Digitally signed by ELDEN.MARK.E.JR.1228787902 Date: 2021.03.09 15:45:02 -06'00'	422 SCMS/GUEA (405) 582-5340	20. CORROSION CONTROL		
21. PROJECT ENGINEER	HOANG.LONG.K.1232215298 Digitally signed by HOANG.LONG.K.1232215298 Date: 2021.03.03 15:02:42 -06'00'	422 SCMS/GUEA (405) 582-5342	22. HCI / HARDNESS		
24. ENG APPROVAL	ELDEN.MARK.E.JR.1228787902 Digitally signed by ELDEN.MARK.E.JR.1228787902 Date: 2021.03.09 15:45:34 -06'00'	422 SCMS/GUEA (405) 582-5340	25. NDI		
27. AF AUTHENTICATION	ELDEN.MARK.E.JR.1228787902 Digitally signed by ELDEN.MARK.E.JR.1228787902 Date: 2021.03.09 15:46:01 -06'00'	422 SCMS/GUEA (405) 582-5340	28. SYSTEM SAFETY		
30. AF RELEASE	JOHNSON.LESLIE.E.III.1160458549 Digitally signed by JOHNSON.LESLIE.E.III.1160458549 Date: 2021.03.11 07:21:00 -06'00'	LZPEM (405) 736-5748	31. (EDITABLE FIELD)		

32. DESCRIPTION OF APPROVED CHANGES/REMARKS

This EO replaces EO 2014A0354-T.

DWG ODA CAGE CODE: WAS 01794.
IS 017N4.

- B-52 YAW ELECTRICAL CONTROL UNIT (PN 1925900-3) shall be marked with a Unique Item Identifier (UII). (REF: MIL-STD-130)

- If no UID label is present, fabricate new UID label (200945069-501) to attach to end item (PN 1925900-3).

- New UID label will be located on the end item as shown in sketch/photo on page 2, AF form 3926.

(UID Label P/N 200945085-011A is an acceptable alternate part)

33. DISTRIBUTION STATEMENT: (REQUIRED PER DoDI 5230.24)
DISTRIBUTION STATEMENT D: Distribution authorized to Department of Defense and U.S. DoD contractors only, Administrative or Operational Use: 11 MAR 2021.
Other requests for this document shall be referred to 422 SCMS/GUEA, TINKER AFB, OK 73145.
WARNING: This document contains technical data whose export is restricted by Federal Law. Dissemination of this document is controlled under DoD Directive 5230.25.
DESTRUCTION NOTICE: Destroy by any method that will prevent disclosure of contents or reconstruction of the document.

Add Continuation Sheet (3926) | Add Parts List Sheet (3927)

Add Continuation Sheet (3926) | Add Parts List Sheet (3927)

ENGINEERING ORDER	1. ENGINEERING ORDER NO 2021A0059-T	2. RELEASE DATE: 2021-03-11	PAGE 2 OF 3 PAGES
3. DWG TITLE YAW ELECTRICAL CONTROL UNIT	4. DWG ODA CAGE CODE 017N4	5. DWG NO. 1925900-3	6. DOC TYPE

32 (CONT). DESCRIPTION OF APROVED CHANGES/REMARKS - *CONTINUED FROM PREVIOUS SHEET*

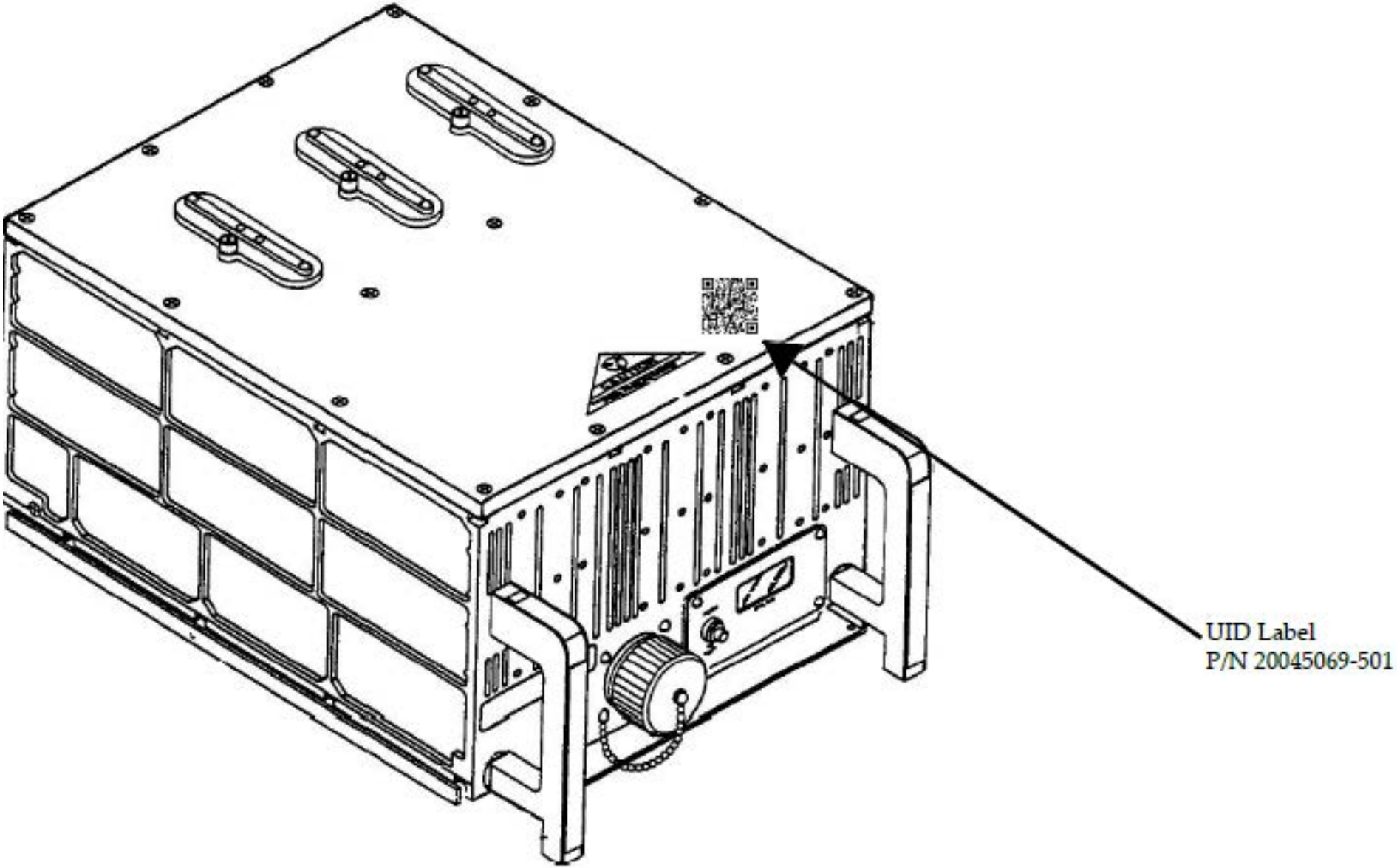

ENGINEERING ORDER	1. ENGINEERING ORDER NO	2. RELEASE DATE:	PAGE 3 OF 3 PAGES
	2021A0059-T	2021-03-11	

3. DWG TITLE	4. DWG ODA CAGE CODE	5. DWG NO.	6. DOC TYPE
YAW ELECTRICAL CONTROL UNIT	017N4	1925900-3	

PARTS LIST CHANGES

ACTION	QTY REQ PER DASH NO				NOMENCLATURE	CAGE CODE	IDENTIFYING NO.	MATERIAL/SPECIFICATION	UNIT WT.	ZONE	FIND NO.
ADD	1				PLATE, Identification	98748	200945069-501	PV6 tesa® Secure™ Tape or Equiva			
ADD	1				UID Label (Alternate)	98747	200945085-011A	PV6 tesa® Secure™ Tape or Equiva			