ENGINEERING ORDER

1. ENGINEERING ORDER NO. 2010C0691

DATE: 2010-09-07 | PAGE 1 OF 3 PAGES

2. DWG TITLE	3. DWG CAGE CODE	4. DWG NO.
Fuel/Oil Heat Exchanger	78943	UA538795-3

5. NEXT ASSY	6. USED ON	7. OPR CAGE CODE	DWG SIZE	DWG SHEET(S)	LATEST DWG REV LTR
	F-15 Aircraft	98748			

8. TYPE OF ENGINEERING ORDER		9. REASONS FOR CHANGE	
✔	ADVANCE CHANGE		ERROR CORRECTION
	DEVIATION AUTHORIZED		DESIGN CHANGE
	CHANGE NOTICE		DRAWING CLARIFICATION
	INFORMATION	✔	UPDATE DRAWING

11. DOCUMENTS AFFECTED *(TO/TCTO/SPEC/OTHER)*: 6J22-3-3

12. EO PREPARED/REQUESTED BY	SYMBOL	DATE
Dena Jenkins JENKINS.DENA.L.1385757421 Digitally signed by JENKINS.DENA.L.1385757421 DN: c=US, o=U.S. Government, ou=DoD, ou=PKI, ou=USAF, cn=JENKINS.DENA.L.1385757421 Date: 2010.10.27 14:12:40 -05'00'	423 SCMS	27OCT2010
	PHONE	
	(405) 736-3716	

13. ENGINEERING APPROVAL	SYMBOL	DATE
EWY.JENNY.NICOLE.1249715707 Digitally signed by EWY.JENNY.NICOLE.1249715707 DN: c=US, o=U.S. Government, ou=DoD, ou=PKI, ou=USAF, cn=EWY.JENNY.NICOLE.1249715707 Date: 2010.11.19 13:36:06 -06'00'	423SCMS	20101119
	PHONE	
	(405)736-3747	

14. CORROSION CONT. MON.	SYMBOL	DATE
15. NDI	SYMBOL	DATE
16.	SYMBOL	DATE
17. DWG CHANGED BY	SYMBOL	DATE
18. CHANGE CHECKED BY	SYMBOL	DATE
19. EO/DWG RELEASED BY EWY.JENNY.NICOLE.1249715707 Digitally signed by EWY.JENNY.NICOLE.1249715707 DN: c=US, o=U.S. Government, ou=DoD, ou=PKI, ou=USAF, cn=EWY.JENNY.NICOLE.1249715707 Date: 2010.11.19 13:35:54 -06'00'	423 SCMS	20101019

10. DISPOSITION OF SPARES	
	REWORK
	MODIFY
	SCRAP
	REPLACE

OTHER COMMENTS

This EO adds Item Unique Identification (IUID) requirements to the drawing

DRC Contract

20. DESCRIPTION OF CHANGES/REMARKS

- As of the date of this EO (7 September 2010), no copy of this drawing exists in JEDMICS.

- F-15 Aircraft Fuel/Oil Heat Exchanger (PN UA538795-3) shall be marked with a Unique Item Identifier (UII). (REF: MIL-STD-130)

- If no UII matrix is present, fabricate new identification plate (200945069-95) and attach in the location of the existing ink stamped identification information using EA-934NA adhesive or equivalent.

- The new UID identification plate will be located on the end item as shown in sketch/photo on page 2, AF form 3926.

- After attaching IUID plate to the end item, apply a thin overcoat to the IUID plate, using 1A20, 1A33 or equivalent Polyurethane Conformal Coating, per manufacturer's instructions. REF: MIL-I-46058C

ENGINEERING ORDER *(Continuation Sheet)*		1. ENGINEERING ORDER NO. 2010C0691	
		DATE: 2010-09-07	PAGE 2 OF 3 PAGES
2. DWG TITLE Fuel/Oil Heat Exchanger	3. DWG CAGE CODE 78943	4. DWG NO. UA538795-3	

5. DESCRIPTION OF CHANGES/REMARKS

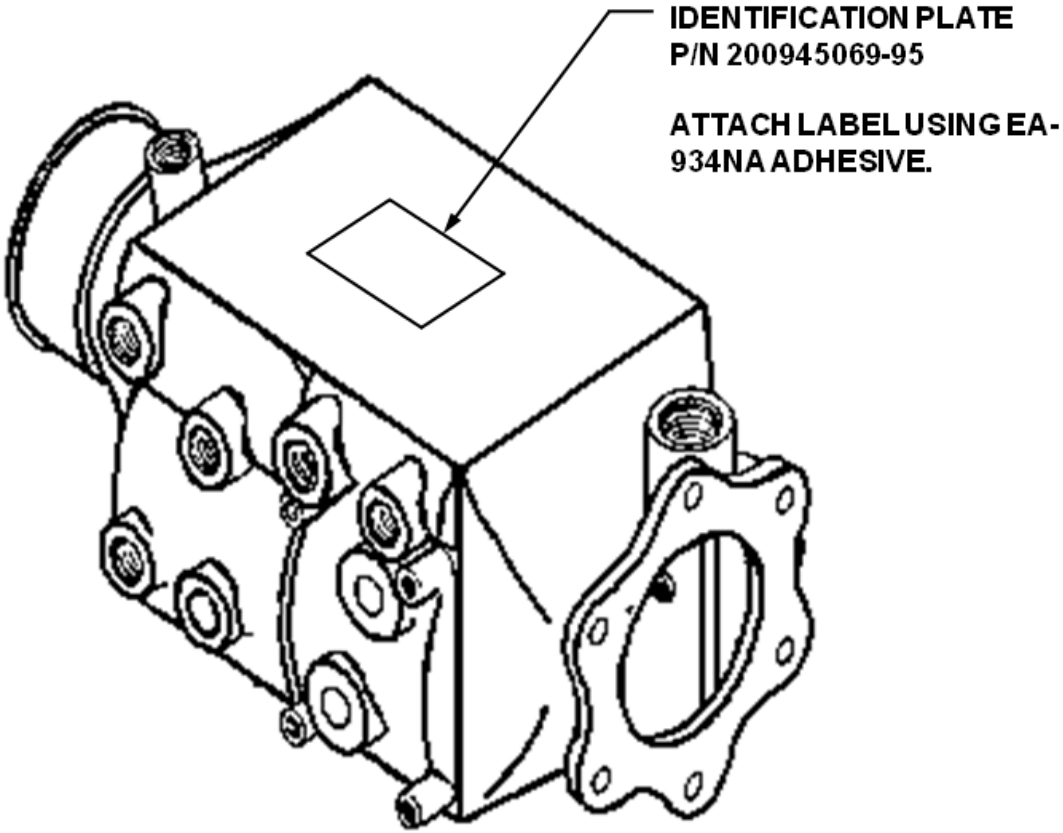

UA538795-3 (REF)

REPLACES AF FORM 2601, 19940701, WHICH IS OBSOLETE

ENGINEERING ORDER - PARTS LIST CHANGES

1. ENGINEERING ORDER NO. 2010C0691

DATE: 2010-09-07 | PAGE 3 OF 3 PAGES

2. DWG TITLE: Fuel/Oil Heat Exchanger

3. DWG CAGE CODE: 78943

4. DWG NO.: UA538795-3

PARTS LIST CHANGE

ACTION	QTY REQ PER DASH NO -3			SYM	NOMENCLATURE	CAGE CODE	IDENTIFYING NO.	MATERIAL/SPECIFICATION	ZONE	FIND NO.
ADD	1				PLATE, Identification	98748	200945069-95			
ADD	AR				POLYURETHANE CONFORMAL		1A20, 1A33,	MIL-I-46058C Type UR		
					COATING		or equivalent			
ADD	AR				ADHESIVE		EA-934NA			
							or equivalent			