SPECIAL PACKAGING INSTRUCTION

CODE ID	SPI NO (TPO)
98748	F 00-510-1886
	SHEET 1 OF 3

PART OR DRAWING NO.	NATIONAL STOCK NO.	CURR REV
5-84042-2	1650-00-510-1886	B
ITEM NOMENCLATURE ACTUATOR ASSEMBLY		ORIG DATE 64295

ILL D. CHOI
PS A. MALLORY
CHKR G. VILLARMA
AUTH C. TROTTER

U.S. AIR FORCE OKLAHOMA CITY ALC APPROVED PACKAGING 11

PRESERVATION IAW MIL-STD-2073

SERVICEABLE METHOD: 20
UNSERVICEABLE METHOD: 20

QUP 001

ICQ N/A

CLEANING IAW MIL-STD-2073

DRYING IAW MIL-STD-2073

PRESERVATIVE MIL-C-11796 OR EQUIVALENT

MARKING IAW MIL-STD-129

SPECIAL MARKINGS:

A) SPI NO. F 00-510-1886
B) REUSABLE CONTAINER AND DUNNAGE DO NOT DESTROY.
C) NOT FOR OUTSIDE STORAGE.

CLOSURE

LEVEL A: N/A
LEVEL B: IAW ASTM-D 1974

PACKING AS SPECIFIED BELOW AND BILL OF MATERIALS

LEVEL	SPEC	STYLE	TYPE	CL	VRTY	GR	TR
A	N/A	N/A	N/A	N/A	N/A	N/A	N/A
B	ASTM-D 5118	RSC	CF	WR	SW	V3C	N/A

	LEVEL A	LEVEL B
GROSS CU FT	N/A	1.241
GROSS WT LBS	N/A	27
DESIGN FRAGILITY G	N/A	N/A

CNTNR I.D.	LENGTH	WIDTH	DEPTH
LEVEL A:	N/A	N/A	N/A
LEVEL B:	6	6	52

CNTNR O.D.	LENGTH	WIDTH	DEPTH
LEVEL A:	N/A	N/A	N/A
LEVEL B:	6 3/8	6 3/8	52 3/4
ITEM DIM	49	4	4
ITEM WT LBS	23.9 LBS		

REVISIONS		
LTR	DESCRIPTION	DATE
A	UPDATED SPECS & MATERIALS	06300
B	CHANGED DEPTH ON INSERT P/N (2) & (3)	19267

NOTES:

1) PRESERVATIVE P/N (5) ON BARE STEEL, WRAP WITH BARRIER P/N (4).

PART NO.	QTY.	NOMENCLATURE OR DESCRIPTION	SIZE (INCHES UNLESS SPECIFIED) TOLERANCES ON FRAC. ± 1/8, DECIMAL ± .10, ANGLES ± 1°	MATERIAL SPECIFICATION
5	A/R	PRESERVATIVE	AS REQUIRED	MIL-C-11796 OR EQUIVALENT 1
4	A/R	BARRIER	AS REQUIRED	MIL-PRF-121 1
3	1	INSERT	6 X 6 X 2 1/2	A-A-59136, DETAIL 'A'
2	1	INSERT	6 X 6 X 3 1/2	A-A-59136, DETAIL 'B'
1	1	CONTAINER I.D.	6 X 6 X 52	SEE LEVEL OF PACK

DISTRIBUTION STATEMENT D: DISTRIBUTION AUTHORIZED TO DEPARTMENT OF DEFENSE AND U.S. DOD CONTRACTORS ONLY, ADMINISTRATIVE OR OPERATIONAL USE, 04 APRIL 2018, OTHER REQUESTS FOR THIS DOCUMENT SHALL BE REFERRED TO 406 SCMS/GULAA (PACKAGING DIVISION), TINKER AFB, OK 73145

SPECIAL PACKAGING INSTRUCTION	CODE ID 98748	SPI NO (TPO) F 00-510-1886
ITEM NOMENCLATURE ACTUATOR ASSEMBLY		SHEET 2 OF 3

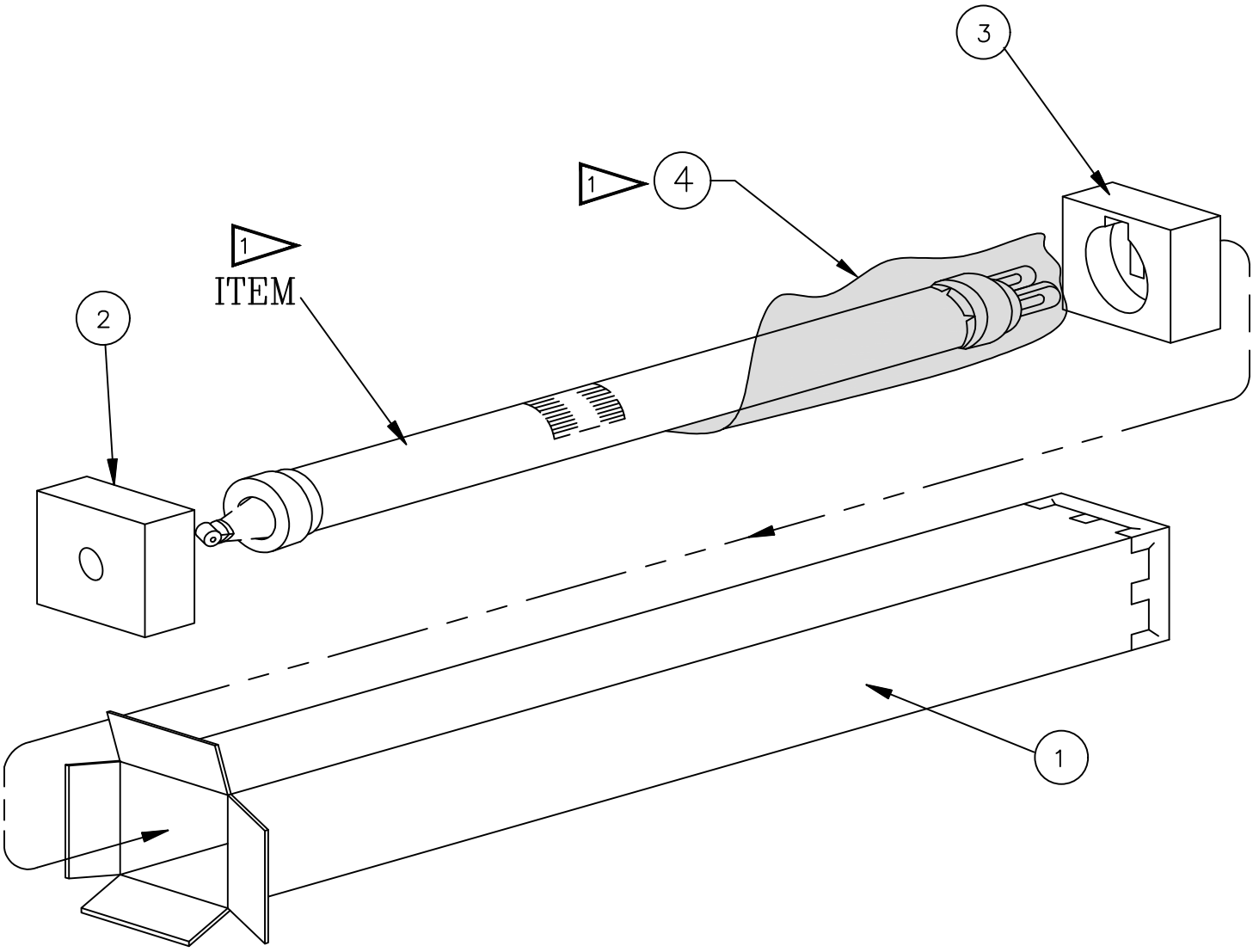

SPECIAL PACKAGING INSTRUCTION	CODE ID 98748	SPI NO (TPO) F 00-510-1886
ITEM NOMENCLATURE ACTUATOR ASSEMBLY		SHEET 3 OF 3

DETAIL 'A'
INSERT P/N (3)

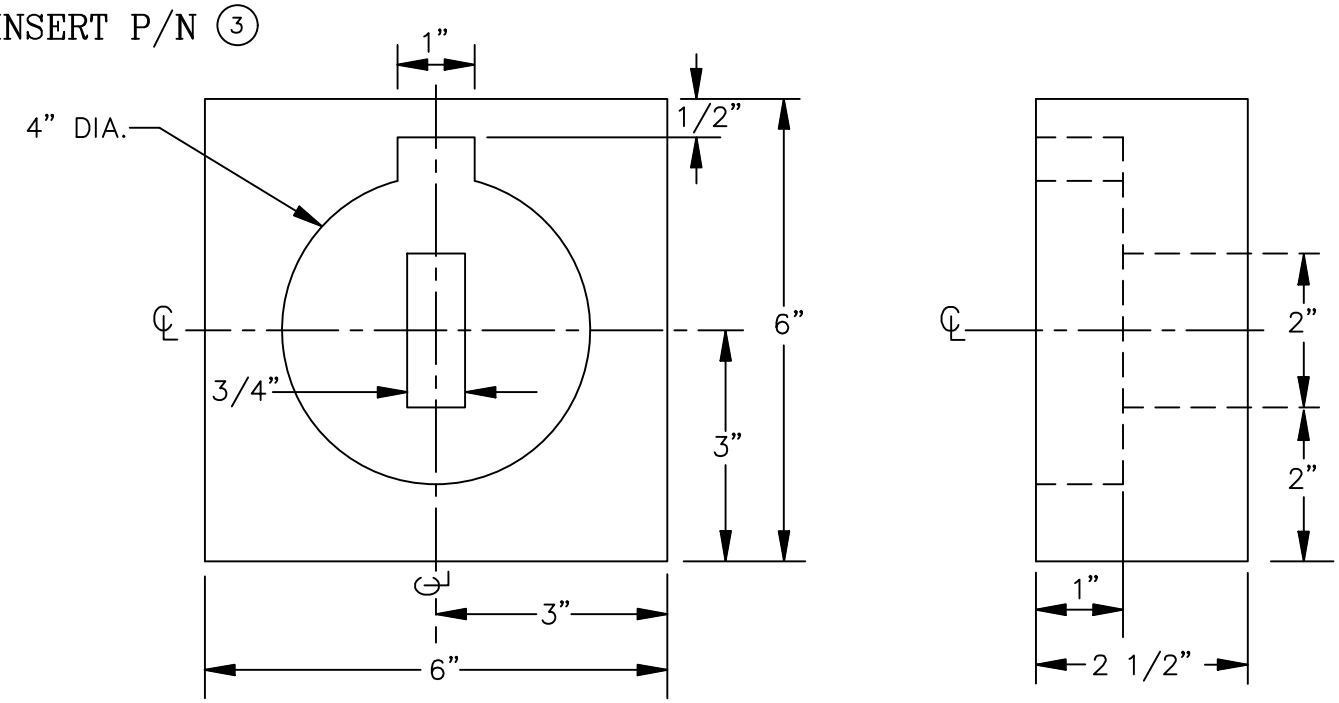
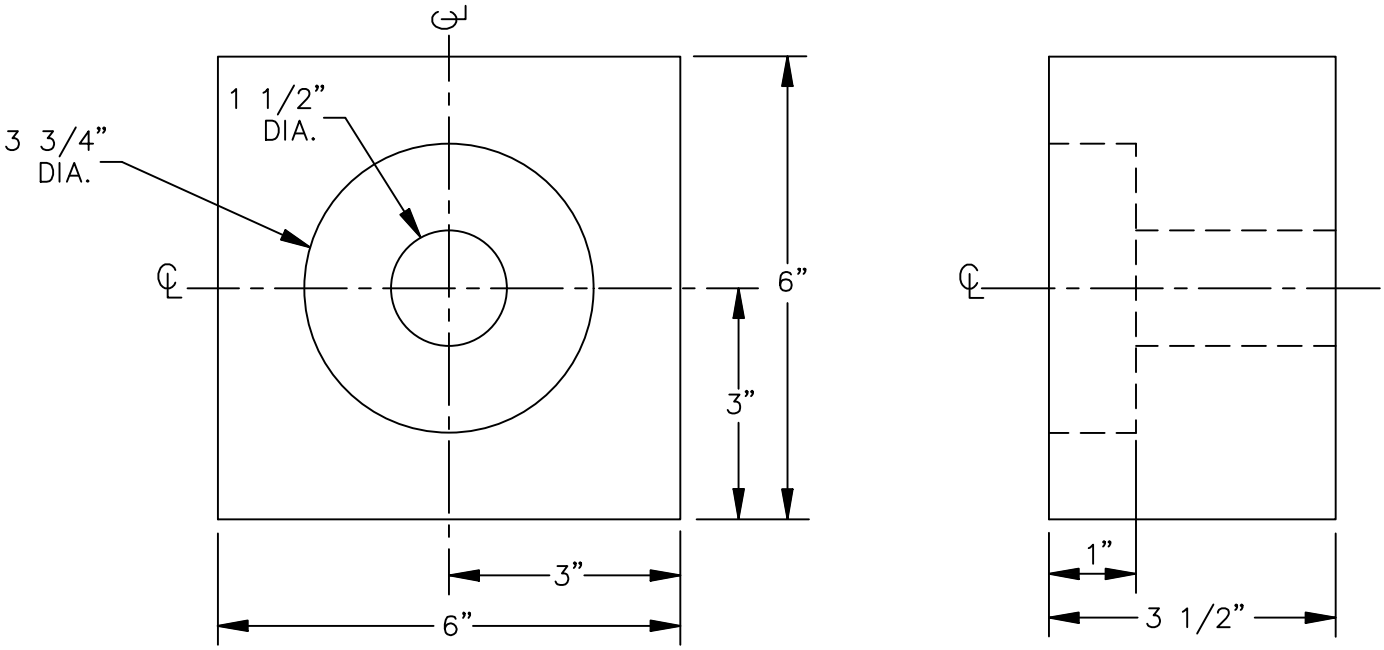
DETAIL 'B'
INSERT P/N (2)