ENGINEERING ORDER

1. ENGINEERING ORDER NO. 2012C0714-T

DATE: 2010-06-14 | PAGE 1 OF 3 PAGES

2. DWG TITLE	3. DWG CAGE CODE	4. DWG NO.
EMERGENCY OXYGEN PRESSURE REDUCER ASSEMBLY TYPE NA	99251	1659879-1

5. NEXT ASSY	6. USED ON	7. OPR CAGE CODE	DWG SIZE	DWG SHEET(S)	LATEST DWG REV LTR
	F-16 Aircraft	98748			

8. TYPE OF ENGINEERING ORDER		9. REASONS FOR CHANGE	
✔	ADVANCE CHANGE		ERROR CORRECTION
	DEVIATION AUTHORIZED		DESIGN CHANGE
	CHANGE NOTICE		DRAWING CLARIFICATION
	INFORMATION	✔	UPDATE DRAWING

11. DOCUMENTS AFFECTED *(TO/TCTO/SPEC/OTHER)*: 15X6-3-32-3

12. EO PREPARED/REQUESTED BY	SYMBOL	DATE
Nicholas Picconi PICCONI.NICHOLAS.SHANE.1118867617 Digitally signed by PICCONI.NICHOLAS.SHANE.1118867617 DN: c=US, o=U.S. Government, ou=DoD, ou=PKI, ou=USAF, cn=PICCONI.NICHOLAS.SHANE.1118867617 Date: 2012.03.06 10:16:11 -06'00'	423 SCMS	2012-03-06
PHONE: 405-734-7909		
13. ENGINEERING APPROVAL EWY.JENNY.NICOLE.1249715707 Digitally signed by EWY.JENNY.NICOLE.1249715707 DN: c=US, o=U.S. Government, ou=DoD, ou=PKI, ou=USAF, cn=EWY.JENNY.NICOLE.1249715707 Date: 2012.03.12 13:08:04 -05'00'	SYMBOL: 423SCMS	DATE: 20120312
PHONE: (405)734-7773		

14. CORROSION CONT. MON.	SYMBOL	DATE
15. NDI	SYMBOL	DATE
16.	SYMBOL	DATE
17. DWG CHANGED BY	SYMBOL	DATE
18. CHANGE CHECKED BY	SYMBOL	DATE
19. EO/DWG RELEASED BY EWY.JENNY.NICOLE.1249715707 Digitally signed by EWY.JENNY.NICOLE.1249715707 DN: c=US, o=U.S. Government, ou=DoD, ou=PKI, ou=USAF, cn=EWY.JENNY.NICOLE.1249715707 Date: 2012.03.12 13:07:46 -05'00'	SYMBOL: 423SCMS	DATE: 20120312

10. DISPOSITION OF SPARES	
	REWORK
	MODIFY
	SCRAP
	REPLACE

OTHER COMMENTS: This EO adds Item Unique Identification (IUID) requirements to the drawing

DRC Contract

20. DESCRIPTION OF CHANGES/REMARKS

- As of the date of this EO (2012-03-06), no copy of this drawing exists in JEDMICS or MEDALS.

- F-16 Aircraft Emergency Oxygen Pressure Reducer Assembly (PN 1659879-1) shall be marked with a Unique Item Identifier (UII). (REF: MIL-STD-130)

- If no UII symbol is present, fabricate new identification plate (200945069-204) to replace existing identification plate/label.

- New UID identification plate will be located in the same location as existing plate/label. See sketch/photo on page 2, AF form 3926.

- After attaching IUID plate to end item, apply a thin overcoat to IUID plate ensuring the plate edges are sealed, using 1A20, 1A33 or equivalent Polyurethane Conformal Coating, per manufacturer's instructions. REF: MIL-I-46058C

ENGINEERING ORDER *(Continuation Sheet)*		1. ENGINEERING ORDER NO. 2012C0714-T	
		DATE: 2010-06-14	PAGE 2 OF 3 PAGES
2. DWG TITLE EMERGENCY OXYGEN PRESSURE REDUCER ASSEMBLY TYP	3. DWG CAGE CODE 99251	4. DWG NO. 1659879-1	

5. DESCRIPTION OF CHANGES/REMARKS

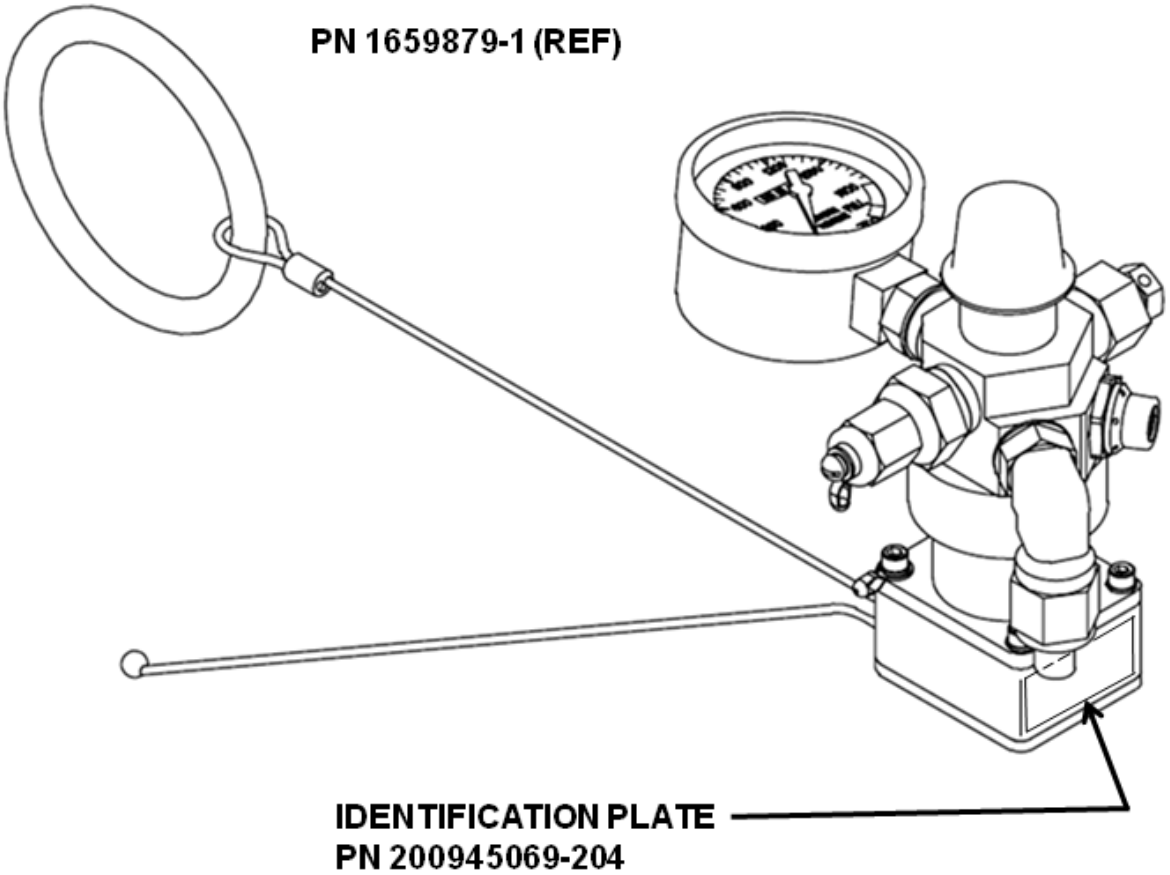

ENGINEERING ORDER - PARTS LIST CHANGES

1. ENGINEERING ORDER NO. 2012C0714-T

DATE: 2010-06-14 | PAGE 3 OF 3 PAGES

2. DWG TITLE: EMERGENCY OXYGEN PRESSURE REDUCER ASSEMBLY TYPE NA

3. DWG CAGE CODE: 99251

4. DWG NO. 1659879-1

PARTS LIST CHANGE

ACTION	QTY REQ PER DASH NO -1			SYM	NOMENCLATURE	CAGE CODE	IDENTIFYING NO.	MATERIAL/SPECIFICATION	ZONE	FIND NO.
ADD	1				PLATE, Identification	98748	200945069-204			
ADD	AR				POLYURETHANE CONFORMAL		1A20, 1A33,	MIL-I-46058C Type UR		
					COATING		or equivalent			