SPECIAL PACKAGING INSTRUCTION

CODE ID	SPI NO. (TPO)
98747	F01-263-9440
	SHEET 1 OF 6

PART OR DRAWING NO.	NATIONAL STOCK NO.	CURRENT REV
581750-11-1	2835-01-263-9440 RP	C

ITEM NOMENCLATURE: POWER UNIT, GAS TURBINE ENGINE

ORIGINAL DATE: 09006

ILL. D. NAY
P.S. R. TOMAC
CHK. M. MERRILL
AUTH. N. CORONADO

MILITARY PRESERVATION IAW MIL-STD-2073

SERVICEABLE METHOD: 52 [2]
UNSERVICEABLE METHOD: 52 [2]
QUP 001
ICQ 000
CLEANING & DRYING: IAW MIL-STD-2073
PRESERVATIVE: N/A

MARKING IAW MIL-STD-129 [1]

SPECIAL MARKINGS:
A) SPI NO. F01-263-9440
MARK THE SPI NUMBER ON THE IDENTIFICATION SIDE OF CONTAINER.
B) REUSABLE CONTAINER & DUNNAGE DO NOT DESTROY.
C) METHOD 50 LABEL

ADDITIONAL SPECIAL MARKINGS:
A) DANGEROUS GOODS IN APPARATUS
UN3363
B) TYPE AND FLASH POINT OF FUEL [3]
C) CLASS 9 LABEL

CAUTION:
ITEMS CONTAINING RESIDUAL FUEL ARE CONSIDERED HAZARDOUS MATERIALS AND MUST BE PACKED IAW THE APPROPRIATE HAZARDOUS MATERIAL REGULATION AND CERTIFIED BY AUTHORIZED HAZARDOUS MATERIAL PERSONNEL

CLOSURE

LEVEL A: IAW: ASTM D6251
LEVEL B: IAW: ASTM D1974

PACKING AS SPECIFIED BELOW AND BILL OF MATERIALS

LEVEL	SPEC	STYLE	TYPE	CL	VRTY	GR	TR
A	ASTM D6251	A	III	2			B
B	ASTM D5118	RSC				V3c	

	LEVEL A	LEVEL B
GROSS CU FT	10.459	7.906
GROSS WT LBS	75	58
DESIGN FRAGILITY G	85	85

	LENGTH	WIDTH	DEPTH
CNTR I.D.			
LEVEL A:	26 3/4	24 3/4	21 1/2
LEVEL B:	26	24	20 1/2
CNTR O.D.			
LEVEL A:	28 3/4	26 3/4	23 1/4
LEVEL B:	26 3/8	24 3/8	21 1/4
ITEM DIM	18	16	11
ITEM WT.	35 LBS		

REVISIONS		
LTR	DESCRIPTION	DATE
C	UPDATED DIMENSIONS ADDED DISTRIBUTION STATEMENT AND DESTRUCTION NOTICE REMOVED EXTERIOR CONTAINER	18151

DISTRIBUTION STATEMENT D: DISTRIBUTION AUTHORIZED TO DEPARTMENT OF DEFENSE AND U.S. DOD CONTRACTORS ONLY, ADMINISTRATIVE OR OPERATIONAL USE, 30 MAY 2018. OTHER REQUESTS FOR THIS DOCUMENT SHALL BE REFERRED TO 406 SCMS/GULAA, (PACKAGING DIVISION), HILL AFB, UTAH 84056.

DESTRUCTION NOTICE: FOLLOW THE PROCEDURES IN DOD 5220.22-M, NATIONAL INDUSTRIAL SECURITY PROGRAM OPERATING MANUAL (NISPOM), SECTION 5-705, OR DOD 5200.1-R, INFORMATION SECURITY PROGRAM, CHAPTER VI. FOR UNCLASSIFIED, LIMITED DOCUMENTS, DESTROY BY ANY METHOD THAT WILL PREVENT DISCLOSURE OF CONTENTS OR RECONSTRUCTION OF THE DOCUMENT.

SPECIAL PACKAGING INSTRUCTION	CODE ID 98747	SPI NO. (TPO) F01-263-9440
ITEM NOMENCLATURE POWER UNIT, GAS TURBINE ENGINE		SHEET 2 OF 6

P/N	QTY REQD	NOMENCLATURE OR DESCRIPTION	SIZE: (INCHES UNLESS SPECIFIED) TOLERANCES ON FRAC. ± ⅛, DECIMAL ± .10, ANGLES ± 1°	MATERIAL SPECIFICATION
-21	A/R	TAPE, PACKAGING	3 X AS REQUIRED	ASTM D5486 TYPE I OR V
-20	A/R	TAPE, MASKING	1 X AS REQUIRED	ASTM D6123 TYPE I OR II
-19	1	INDICATOR, HUMIDITY	THREE SPOT	MS 20003
-18	37	DESICCANT	UNIT	MIL-D-3464 TYPE I
-17	1	PAD, TOP	20 1/2 X 18 X 1/4	ASTM D4727 CF, DOM, SW, GRADE 200 6 B
-16	1	LINER	75 X 12 X 1/4	ASTM D4727 CF, DOM, SW, GRADE 200 6 B
-15	4	NUT, HEX	5/16	ASME B18.2.2 C
-14	4	WASHER, PLAIN	5/16	ASME B18.2.1 C
-13	1	STRAP HOLD DOWN	9 X 1 1/4 X .025	ASTM D3953 TYPE 1, RD, FINISH A C
-12	1	BOLT, HEX	1 1/2 X 5/16	ASTM B18.5 C
-11	1	BOLT, CARRIAGE	1 1/2 X 5/16	ASME B18.5 C
-10	2	BOLT, CARRIAGE	2 X 5/16	ASME B18.5 C
-9	1	WRAP/BARRIER	56 X 31	MIL-PRF-121 TYPE I 5 C
-8	A\R	MATERIAL, SORBANT	AS REQUIRED	A-A-59759 TYPE II 4 C
-7	1	BASE	20 X 18 X 1/2	A-A-55057 TYPE A 6 C
-6	1	PAD, SUPPORT	20 X 18 X 1	A-A-59136 CLASS 1, GRADE A 5 6 A C
-5	1	CONTAINER, INTERIOR	20 1/2 X 18 1/2 X 13 3/4 (ID)	ASTM D5118 RSC, CF, DOM, SW, GRADE 200 6
-4	1	BAG, BARRIER	45 X 35 (ID)	MIL-DTL-117 TYPE I, CLASS E, STYLE 1
-3	2	CUSHION, END	20 X 15 X 2	MIL-PRF-26514 TYPE I, GRADE B
-2	2	CUSHION, SIDE	26 X 15 X 2	MIL-PRF-26514 TYPE I, GRADE B
-1	2	CUSHION, TOP & BOTTOM	26 X 24 X 2	MIL-PRF-26514 TYPE I, GRADE B

CAUTION NOTICES

NOTICE 1: ASSETS PACKAGED IN ACCORDANCE WITH PREVIOUS EDITIONS OF THIS SPI DO NOT REQUIRE REPACKAGING IF THE INTEGRITY OF THE SPI IS MAINTAINED.

NOTICE 2: SEE SPIRES FOR A COMPLETE LISTING OF NSN's ASSIGNED TO THIS SPI.

NOTICE 3: PACKAGING MATERIAL MAY BE SUBSTITUTED IF IT MEETS THE REQUIREMENTS OF MIL-STD-2073, PROVIDES EQUAL OR BETTER PROTECTION AND THERE IS NO INCREASED COST TO THE GOVERNMENT.

NOTICE 4: FOR LEVEL A PACKAGING REQUIREMENTS, LEVEL B PACKS SHALL BE OVERBOXED IN A LEVEL A SPECIFIED CONTAINER SHOWN ON PAGE 1 UNDER PACKAGING LEVEL A.

NOTICE 5: OVERSEAS AND FMS PACKAGING MUST MEET THE REQUIREMENTS OF LEVEL A PACKAGING.

INTERNATIONAL STANDARDS FOR PHYTOSANITARY MEASURES
REVISION OF ISPM NO. 15
REVISION OF WOOD PACKAGING MATERIAL FOR INTERNATIONAL TRADE

THE FOLLOWING STATEMENT IS IN COMPLIANCE WITH THE UNITED NATIONS-IMPLEMENTED RESTRICTIONS ON WOOD PACKAGING MATERIAL (WPM). THIS REQUIREMENT IS SPECIFICALLY CONCERNED WITH INVASIVE SPECIES SUCH AS THE PINEWOOD NEMATODE. WPM IS DEFINED AS WOOD PALLETS, SKIDS, LOAD BOARDS, PALLET COLLARS, WOODEN BOXES, REELS, DUNNAGE, CRATES, FRAMES, AND CLEATS. THE STATEMENT BELOW CITES THE REQUIREMENTS IN DETAIL AND COVERS LUMBER FOR BUILDING CONTAINERS AND PALLETS USED FOR DELIVERIES, RESULTING IN SHIPMENTS WORLDWIDE (DIRECT, OR THROUGH AIR LOGISTICS CENTERS (ALC), CONTAINER CONSOLIDATION POINTS (CCP), OR OTHER BASES).

WOODEN LUMBER, WOODEN PALLET AND PACKAGING/CONTAINER STATEMENT:

ALL WOODEN LUMBER, WOODEN PALLETS, AND WOODEN CONTAINERS PRODUCED ENTIRELY OR IN PART OF WOOD PACKAGING MATERIAL (WPM) SHALL BE CONSTRUCTED FROM DEBARKED WOOD IN ADDITION TO THE APPLICATION OF HEAT-TREATED (HT) MATERIAL (HT TO 56 DEGREES CENTIGRADE OR 133 DEGREES FAHRENHEIT FOR 30 MINUTES). CERTIFICATION/MARKING IS REQUIRED BY AN ACCREDITED AGENCY RECOGNIZED BY THE AMERICAN LUMBER STANDARDS COMMITTEE (ALSC). FOR REFERENCE DOCUMENTATION, SEE LATEST REVISION OF "INTERNATIONAL STANDARDS FOR PHYTOSANITARY MEASURES (ISPM NO. 15), "REGULATION OF WOOD PACKAGING MATERIAL IN INTERNATIONAL TRADE."

NOTES

1. I.D. TAGS MUST BE STAMPED BY RESPONSIBLE PARTY SIGNIFYING ITEMS HAS BEEN PREPARED FOR SHIPMENT/STORAGE IAW APPLICABLE T.O.

2. ITEMS WHICH HAVE BEEN DRAINED AND PURGED MUST BE ACCOMPANIED WITH A COMPLETED AFTO FORM 20 OR LOCALLY PRODUCED DOCUMENTATION CERTIFYING THE ITEM HAS BEEN PROPERLY DRAINED AND PURGED. ITEMS CONTAINING RESIDUAL FUEL MUST BE PACKED IN A LEAK-PROOF LINER, WITH SPECIFIED SORBENT MATERIAL IN A STRONG OUTER CONTAINER. MARK, LABEL, AND DOCUMENT THE PACKAGE AS DANGEROUS GOODS IN APPARATUS, UN3363, CLASS 9 LABEL.

3. IF APPLICABLE: MARK TYPE AND FLASH POINT OF PURGING FLUID IAW AFI 24-203, 4.3.3 AND AFMAN 24-204_IP,A.3.3.9.5.4.

4. WRAP FUEL PUMP ENTIRELY WITH SORBENT MATERIAL, REF.-8 THIS IS NOT A REQUIREMENT FOR NEW ITEMS. SORBENT MATERIAL MUST BE INSPECTED PRIOR TO REUSE.

5. WRAP/BARRIER, REF.-9 SHALL BE PLACED ON BASE, REF.-7 AND COVER ENTIRE ITEM.

6. USE ADDITIONAL TOP PADS, REF.-17, IF NEEDED TO PREVENT MOVEMENT, LINER, REF.-16 SHOULD BE SNUG AGAINST BASE, REF.-7, WHEN INTERIOR CONTAINER, REF.-5 IS CLOSED.

SPECIAL PACKAGING INSTRUCTION	CODE ID 98747	SPI NO. (TPO) F01-263-9440
ITEM NOMENCLATURE POWER UNIT, GAS TURBINE ENGINE		SHEET 4 OF 6

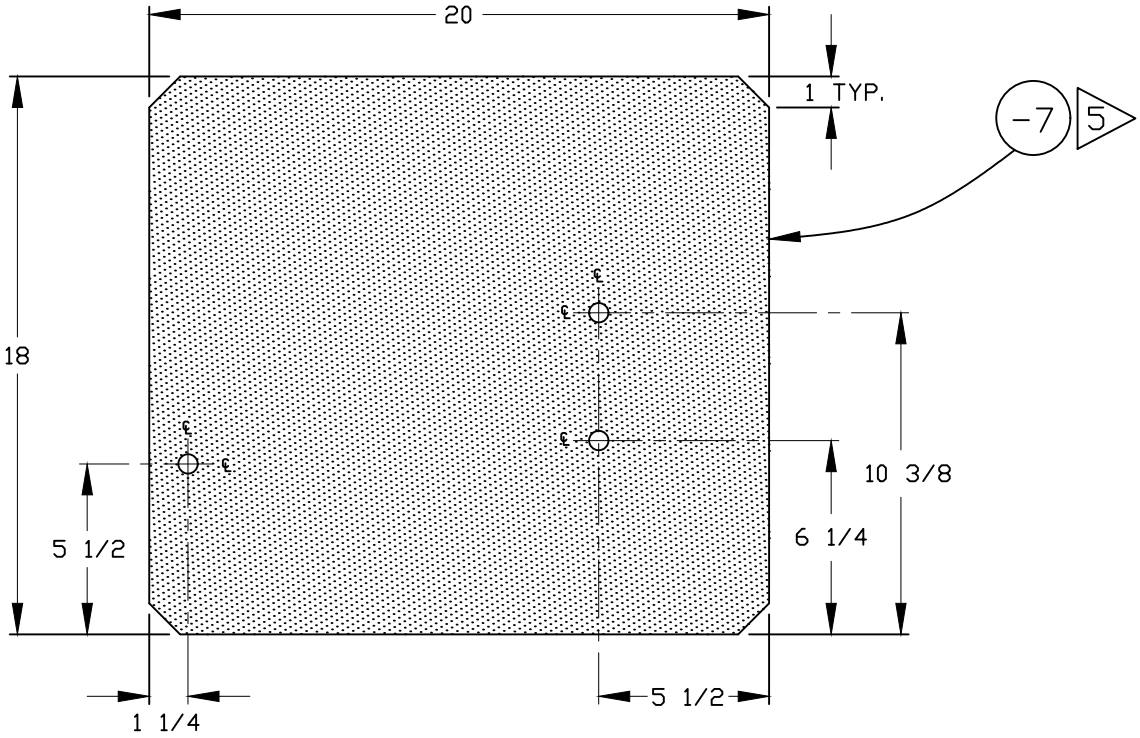

DETAIL A

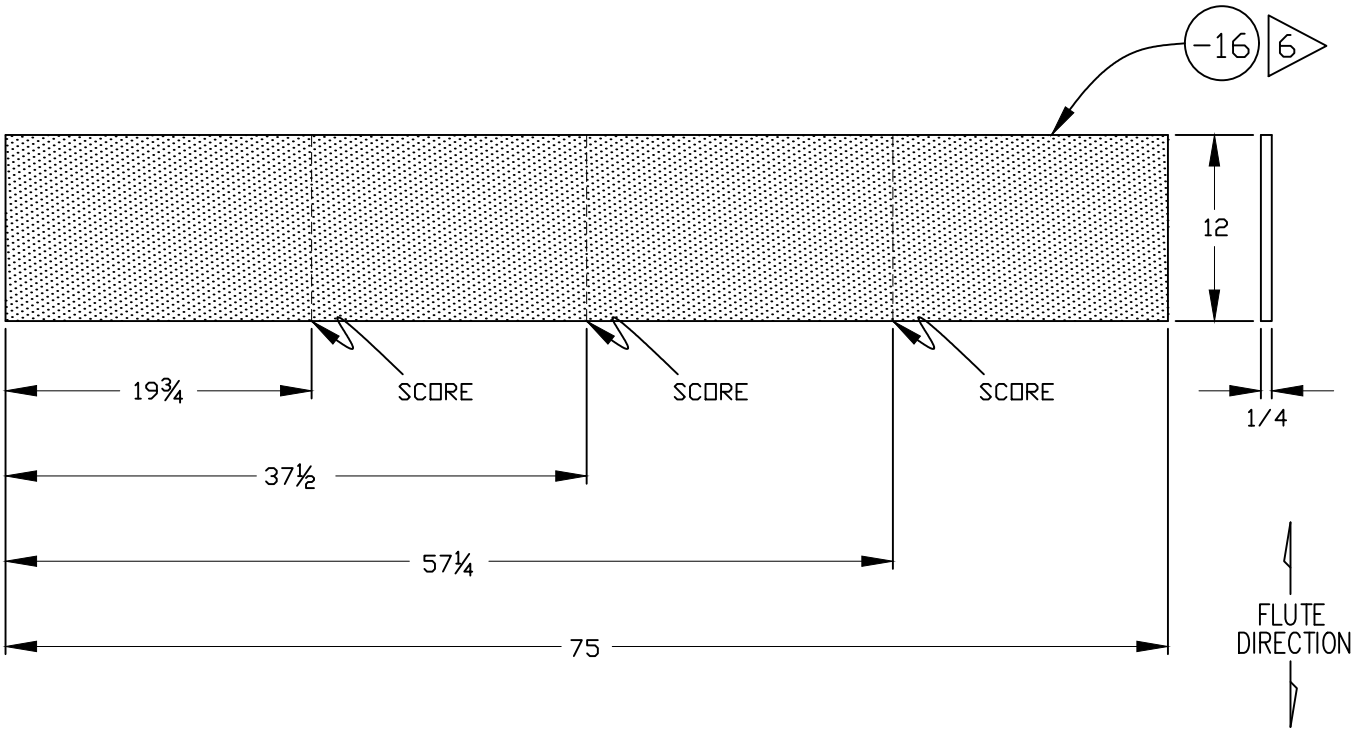

DETAIL B

SPECIAL PACKAGING INSTRUCTION	CODE ID 98747	SPI NO. (TPO) F01-263-9440
ITEM NOMENCLATURE POWER UNIT, GAS TURBINE ENGINE		SHEET 5 OF 6

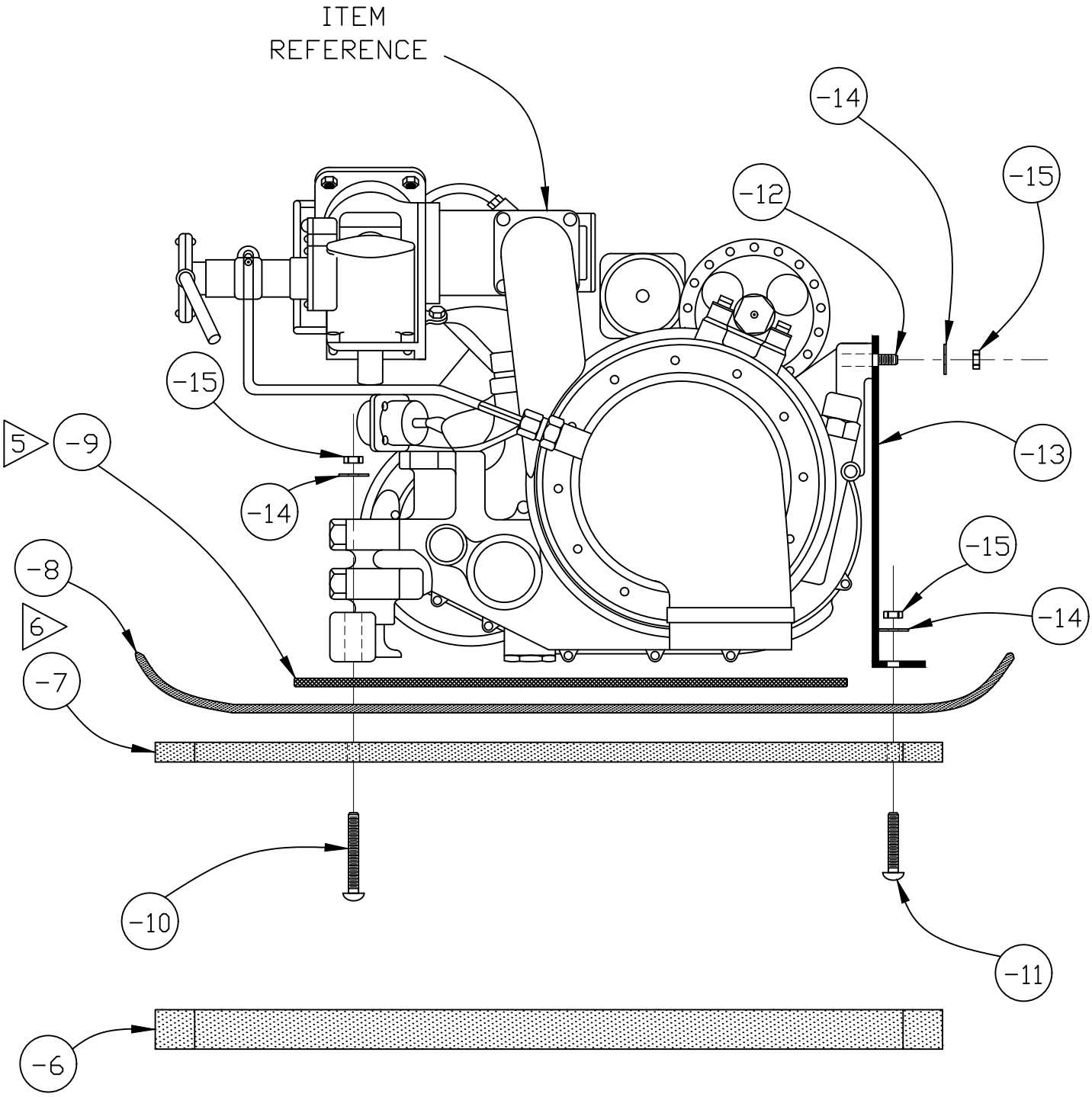
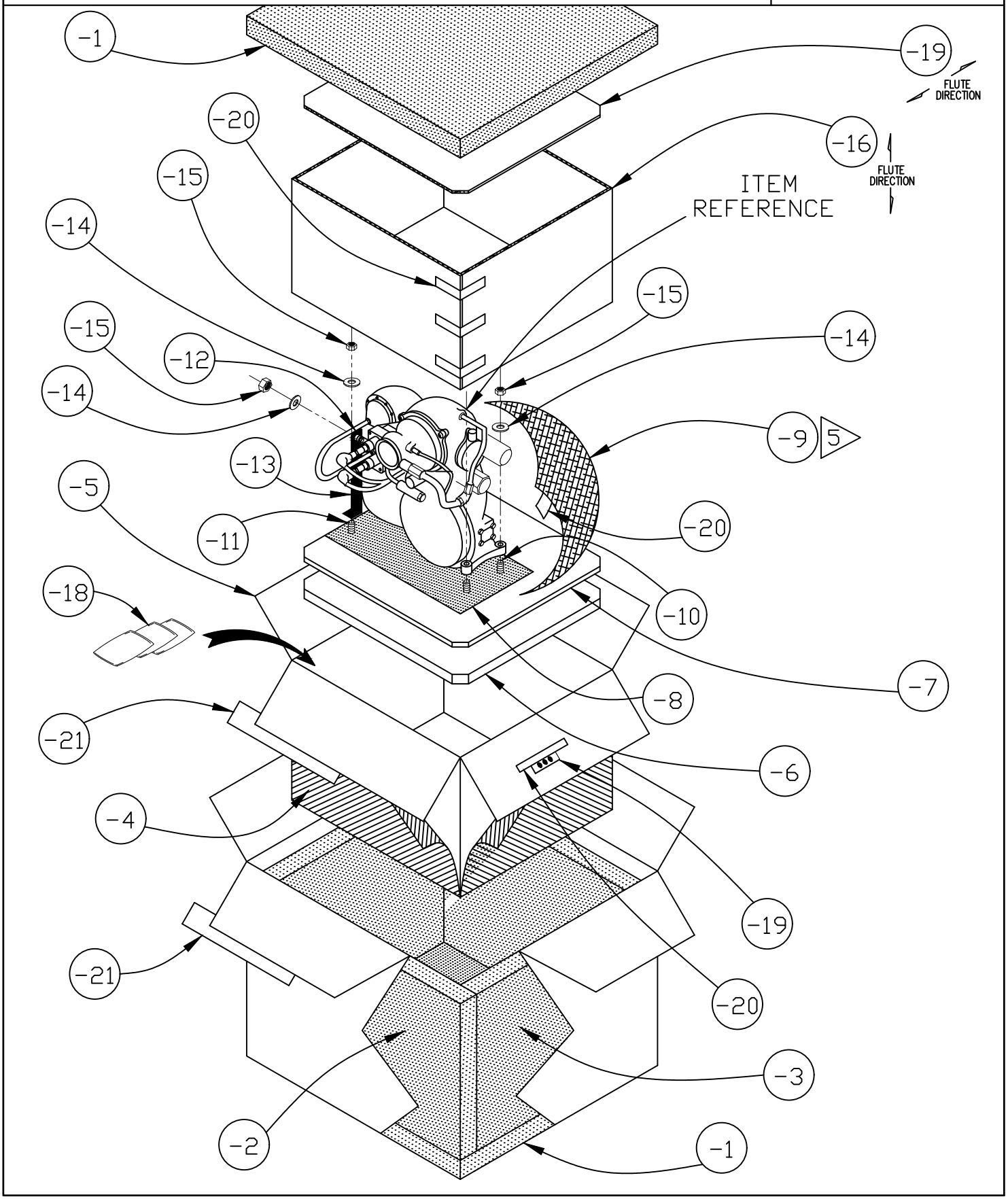
SPECIAL PACKAGING INSTRUCTION	CODE ID 98747	SPI NO. (TPO) F01-263-9440
ITEM NOMENCLATURE POWER UNIT, GAS TURBINE ENGINE		SHEET 6 OF 6