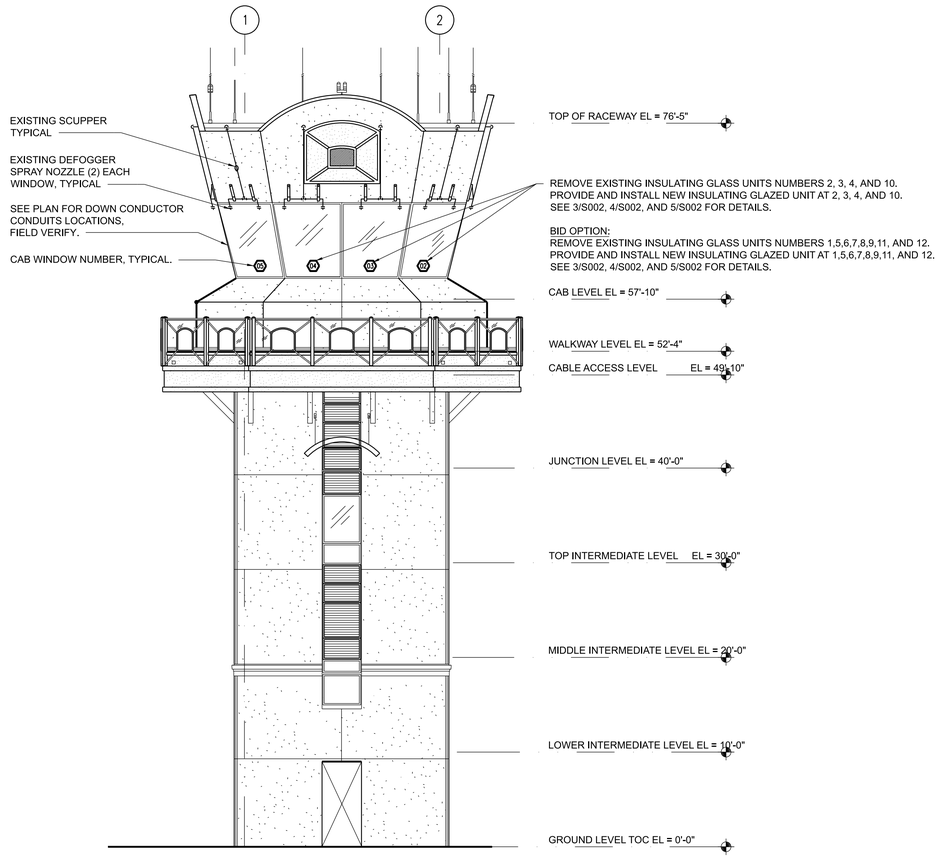

1 S002 ELEVATION
SCALE: 1/8" = 1'-0"

8' 0 8' 16'
SCALE: 1/8" = 1'-0"

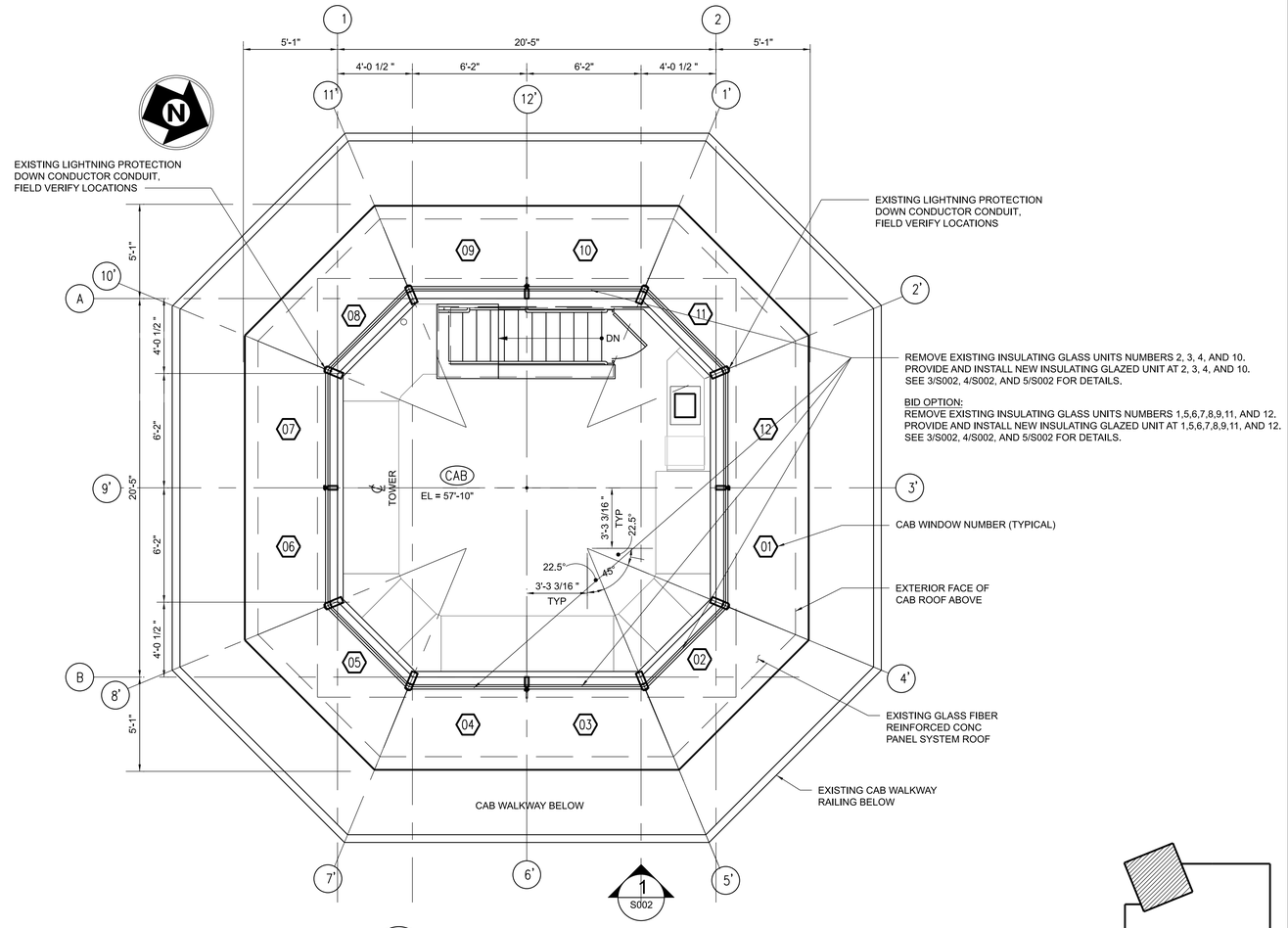

2 S002 CAB LEVEL (EL = 57'-10")
SCALE: 1/4" = 1'-0"

4' 0 4' 8'
SCALE: 1/4" = 1'-0"

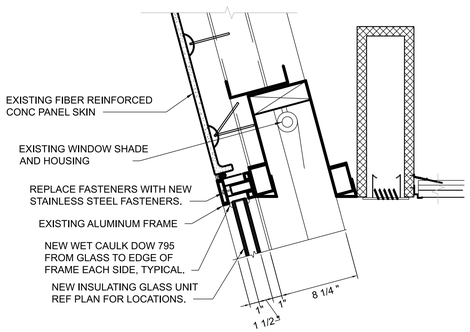

3 S002 CAB WINDOW HEAD TYPICAL DETAIL
SCALE: 1 1/2" = 1'-0"

1' 9" 6" 3" 0 1'
SCALE: 1 1/2" = 1'-0"

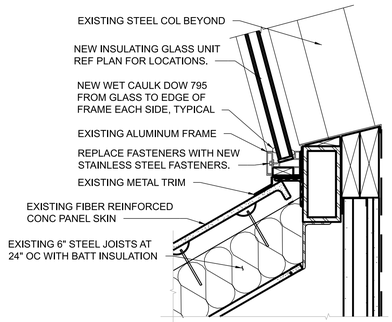

4 S002 CAB WINDOW SILL TYPICAL DETAIL
SCALE: 1 1/2" = 1'-0"

1' 9" 6" 3" 0 1'
SCALE: 1 1/2" = 1'-0"

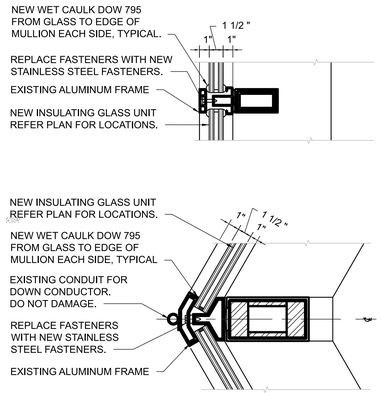

5 S002 CAB WINDOW AT COLUMN TYPICAL DETAIL
SCALE: 1 1/2" = 1'-0"

1' 9" 6" 3" 0 1'
SCALE: 1 1/2" = 1'-0"

NOTES:

1. FIELD VERIFY MEASUREMENTS AND DIMENSIONS PRIOR TO ANY WORK.
2. CONTRACTOR MUST FIELD VERIFY EXISTING INSULATING GLASS UNIT DIMENSIONS, THICKNESS, AND COLOR. NEW INSULATING GLASS UNITS MUST MATCH EXISTING DIMENSIONS, THICKNESS, AND COLOR.
3. APPROXIMATE DAYLIGHT OPENING SIZE OF EXISTING INSULATING GLASS UNITS:
   CAB WINDOW 1,3,4,6,7,9,10,12: BOTTOM WIDTH 73". TOP WIDTH 84", HEIGHT 96.5"
   CAB WINDOW 2,5,8,11: BOTTOM WIDTH 68". TOP WIDTH 89". HEIGHT 96.5"
4. THE MAXIMUM TIME FROM EXISTING INSULATING GLASS REMOVAL TO NEW GLASS ENCLOSING OPENING SHALL BE 1 HOUR. EXISTING INSULATING GLASS UNITS ARE TO BE KEPT ONSITE UNTIL NEW INSULATING GLASS UNITS ARE COMPLETELY INSTALLED. DEMOLISH EXISTING INSULATING GLASS UNITS ONLY AFTER NEW INSULATING GLASS UNIT IS COMPLETELY INSTALLED.
5. EXISTING INSULATING GLASS FRAMES ARE TO REMAIN. DO NOT DAMAGE. PREPARE EXISTING FRAMES AS REQUIRED TO RECEIVE NEW GLASS. CONTRACTOR MUST REPLACE SPACER, SETTING BLOCKS, AND EDGE BLOCKS IN KIND.
6. WET CAULK NEW GLASS TO EDGE OF FRAME WITH DOW 795 EACH SIDE, TYPICAL. PREPARE SURFACES PER MANUFACTURER'S INSTRUCTIONS.
7. REPLACE EXISTING ALUMINUM FRAME SCREWS WITH NEW STAINLESS STEEL SCREWS OF THE SAME SIZE AND TYPE AS EXISTING.
8. WIND LOADING PER ASCE 7-22:
   RISK CATEGORY IV.
   BASIC WIND SPEED = 117 Vmph.
   EXPOSURE CATEGORY C.

   SEISMIC LOADING PER ASCE 7-22:
   Sds = 0.12
   Sd1 = 0.085
   SEISMIC DESIGN CATEGORY 3
   RISK CATEGORY IV
9. DEFOGGER OUTAGES MUST BE COORDINATED WITH AIR TRAFFIC. OUTAGES MUST NOT INTERFERE WITH AIR TRAFFIC OPERATIONS.
10. CAB GLASS REMOVAL AND REPLACEMENT ACTIVITIES MUST NOT OCCUR WHEN EXTERIOR TEMPERATURE IS ABOVE 80 DEGREES FAHRENHEIT OR DURING BAD WEATHER.
11. WORK IN CAB AND OUTSIDE OF CAB GLASS MUST OCCUR BETWEEN 0800 TO 1300 LOCAL TIME AND BE COORDINATE WITH THE RESIDENT ENGINEER.

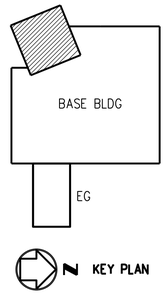

THIS PROJECT COPY IS BASED ON DRAWING ADS-ATCT-A03-S1, REVISION C, DATED 04/17/2015

REV	APPROVED DATE	DESCRIPTION	JCN	REDLINE DATE	APVD

DEPARTMENT OF TRANSPORTATION
FEDERAL AVIATION ADMINISTRATION
ATO - TECHNICAL OPERATIONS CENTRAL SERVICE AREA

ATCT

CAB PLAN, ELEVATION, AND DETAILS

ADDISON ADDISON AIRPORT TX

REVIEWED BY	SUBMITTED BY JAMES EMERT ARNOLD — Digitally signed by JAMES EMERT ARNOLD Date: 2026.04.02 13:12:43 -05'00'	APPROVED BY PHONG T CAO — Digitally signed by PHONG T CAO Date: 2026.04.02 13:19:23 -05'00'	
	PROJECT ENGINEER	MGR: ENGINEERING - FORT WORTH	
DESIGNED JEA	ISSUED BY ENGINEERING SERVICES TERMINAL	DATE 03/25/2026	JCN 24015542
DRAWN JEA		DRAWING NO ADS-24015542-A002	REV
CHECKED			

ISSUED FOR: CONSTRUCTION

ads-24015542-a002.dwg 04/01/2026 9:33:38 AM Plotted by: SRVC-CAEG-EDMS-COORD

EDMS: ads-24015542-a002.dwg

THIS DRAWING PRODUCED ON ASW REGION CAD SYSTEM