SPECIAL PACKAGING INSTRUCTION

CODE ID	SPI NO. (TPO)
98747	F01-252-4042
	SHEET 1 OF 5

PART OR DRAWING NO.	NATIONAL STOCK NO.	CURRENT REV
2007602-103	1620-01-252-4042 LE	D

ITEM NOMENCLATURE
PISTON, LANDING GEAR STRUT

ORIGINAL DATE
89167

ILL. K. KNIGHTON
P.S. W. MONSON
CHK. R. TAYLOR
AUTH. N. CORONADO

MILITARY PRESERVATION IAW MIL-STD-2073

SERVICEABLE METHOD: 20
UNSERVICEABLE METHOD: 20
QUP 001
ICQ 000
CLEANING & DRYING: IAW MIL-STD-2073
PRESERVATIVE: MIL-PRF-16173, CODE 2 ▷1

MARKING IAW MIL-STD-129

SPECIAL MARKINGS:
A) SPI NO. F01-252-4042
MARK THE SPI NUMBER ON THE IDENTIFICATION SIDE OF CONTAINER.
B) REUSABLE CONTAINER & DUNNAGE DO NOT DESTROY.

CLOSURE

LEVEL A: IAW: ASTM D6880
LEVEL B: IAW: ASTM D6880

PACKING AS SPECIFIED BELOW AND BILL OF MATERIALS

LEVEL	SPEC	STYLE	TYPE	CL	VRTY	GR	TR
A	ASTM D6880 (MOD)	4		2			B
B	ASTM D6880 (MOD)	4		2			A

	LEVEL A	LEVEL B
GROSS CU FT	2.474	2.474
GROSS WT LBS	54	54
DESIGN FRAGILITY G	100	100

	LENGTH	WIDTH	DEPTH
CNTR I.D.			
LEVEL A:	35	11	8
LEVEL B:	35	11	8
CNTR O.D.			
LEVEL A:	38	12 1/2	9
LEVEL B:	38	12 1/2	9
ITEM DIM	32	9	5 1/2
ITEM WT.	31 LBS		

REVISIONS		
LTR	DESCRIPTION	DATE
D	ADDED DISTRIBUTION STATEMENT AND DESTRUCTIVE NOTICE, UPDATED FORMAT AND SPECIFICATIONS	18030

DISTRIBUTION STATEMENT D: DISTRIBUTION AUTHORIZED TO DOD AND U.S. DOD CONTRACTORS ONLY, ADMINISTRATIVE OR OPERATIONAL USE, 29 JANUARY 2018. OTHER REQUESTS FOR THIS DOCUMENT SHALL BE REFERRED TO 406 SCMS/GULAA, (PACKAGING DIVISION), HILL AFB, UTAH 84056.

DESTRUCTION NOTICE: FOLLOW THE PROCEDURES IN DOD 5220.22-M, NATIONAL INDUSTRIAL SECURITY PROGRAM OPERATING MANUAL (NISPOM), SECTION 5-705, OR DOD 5200.1-R, INFORMATION SECURITY PROGRAM, CHAPTER VI. FOR UNCLASSIFIED, LIMITED DOCUMENTS, DESTROY BY ANY METHOD THAT WILL PREVENT DISCLOSURE OF CONTENTS OR RECONSTRUCTION OF THE DOCUMENT.

SPECIAL PACKAGING INSTRUCTION	CODE ID 98747	SPI NO. (TPO) F01-252-4042
ITEM NOMENCLATURE PISTON, LANDING GEAR STRUT		SHEET 2 OF 5

P/N	QTY REQD	NOMENCLATURE OR DESCRIPTION	SIZE: (INCHES UNLESS SPECIFIED) TOLERANCES ON FRAC. ± 1/8, DECIMAL ± .10, ANGLES ± 1°	MATERIAL SPECIFICATION	
-12	A/R	TAPE, MASKING	1 X AS REQUIRED	ASTM D6123 TYPE I OR II	2
-11	6	NUT, HEX	3/8	FF-N-836 TYPE II	
-10	6	WASHER, FLAT	3/8	ASME B18.21.1	
-9	6	WASHER, TORQUE	3/8	LOCAL PURCHASE	
-8	6	BOLT, CARRIAGE	5 X 3/8	ASME B18.5	
-7	3	STRAPPING	1 1/4 X .035 X AS REQUIRED	ASTM D3953 TYPE I, HD, FIN. A	
-6	A/R	CUSHION	AS REQUIRED	PPP-P-115 TYPE I OR EQUAL	
-5	1	WRAP	20 X 12	MIL-PRF-121 TYPE I	2
-4	1	WRAP	8 X 8	MIL-PRF-121 TYPE I	2
-3	2	SADDLE	2 X 4 (NOM) X 8	ASTM D6199 CLASS 2	B
-2	1	SADDLE	2 X 4 (NOM) X 7	ASTM D6199 CLASS 2	A
-1	2	TOP & BOTTOM	36 1/2 X 12 1/2 X 1/2	A-A-55057 TYPE A	

CAUTION NOTICES

NOTICE 1: ASSETS PACKAGED IN ACCORDANCE WITH PREVIOUS EDITIONS OF THIS SPI DO NOT REQUIRE REPACKAGING IF THE INTEGRITY OF THE SPI IS MAINTAINED.

NOTICE 2: SEE SPIRES FOR A COMPLETE LISTING OF NSN's ASSIGNED TO THIS SPI.

NOTICE 3: PACKAGING MATERIAL MAY BE SUBSTITUTED IF IT MEETS THE REQUIREMENTS OF MIL-STD-2073, PROVIDES EQUAL OR BETTER PROTECTION AND THERE IS NO INCREASED COST TO THE GOVERNMENT.

NOTICE 4: OVERSEAS AND FMS PACKAGING MUST MEET THE REQUIREMENTS OF LEVEL A PACKAGING.

INTERNATIONAL STANDARDS FOR PHYTOSANITARY MEASURES
REVISION OF ISPM NO. 15
REVISION OF WOOD PACKAGING MATERIAL FOR INTERNATIONAL TRADE

THE FOLLOWING STATEMENT IS IN COMPLIANCE WITH THE UNITED NATIONS-IMPLEMENTED RESTRICTIONS ON WOOD PACKAGING MATERIAL (WPM). THIS REQUIREMENT IS SPECIFICALLY CONCERNED WITH INVASIVE SPECIES SUCH AS THE PINEWOOD NEMATODE. WPM IS DEFINED AS WOOD PALLETS, SKIDS, LOAD BOARDS, PALLET COLLARS, WOODEN BOXES, REELS, DUNNAGE, CRATES, FRAMES, AND CLEATS. THE STATEMENT BELOW CITES THE REQUIREMENTS IN DETAIL AND COVERS LUMBER FOR BUILDING CONTAINERS AND PALLETS USED FOR DELIVERIES, RESULTING IN SHIPMENTS WORLDWIDE (DIRECT, OR THROUGH AIR LOGISTICS CENTERS (ALC), CONTAINER CONSOLIDATION POINTS (CCP), OR OTHER BASES).

WOODEN LUMBER, WOODEN PALLET AND PACKAGING/CONTAINER STATEMENT:

ALL WOODEN LUMBER, WOODEN PALLETS, AND WOODEN CONTAINERS PRODUCED ENTIRELY OR IN PART OF WOOD PACKAGING MATERIAL (WPM) SHALL BE CONSTRUCTED FROM DEBARKED WOOD IN ADDITION TO THE APPLICATION OF HEAT-TREATED (HT) MATERIAL (HT TO 56 DEGREES CENTIGRADE OR 133 DEGREES FAHRENHEIT FOR 30 MINUTES). CERTIFICATION/MARKING IS REQUIRED BY AN ACCREDITED AGENCY RECOGNIZED BY THE AMERICAN LUMBER STANDARDS COMMITTEE (ALSC). FOR REFERENCE DOCUMENTATION, SEE LATEST REVISION OF "INTERNATIONAL STANDARDS FOR PHYTOSANITARY MEASURES (ISPM NO. 15), "REGULATION OF WOOD PACKAGING MATERIAL IN INTERNATIONAL TRADE."

NOTES

1. APPLY PRESERVATIVE TO ALL BARE METAL SURFACES, INCLUDING INSIDE HOLLOW TUBE OF PISTON ASSEMBLY. ENSURE ALL SURFACES ARE COMPLETELY COVERED.

2. USE WRAP, REF.-4 AND REF.-5, ON ALL PRESERVED SURFACES AND SECURE IN PLACE WITH MASKING TAPE, REF.-12.

3. USE CUSHIONING, REF.-6, TO PROTECT ITEM FROM CONTACT WITH WOOD OR STRAPPING.

SPECIAL PACKAGING INSTRUCTION	CODE ID 98747	SPI NO. (TPO) F01-252-4042
ITEM NOMENCLATURE PISTON, LANDING GEAR STRUT		SHEET 4 OF 5

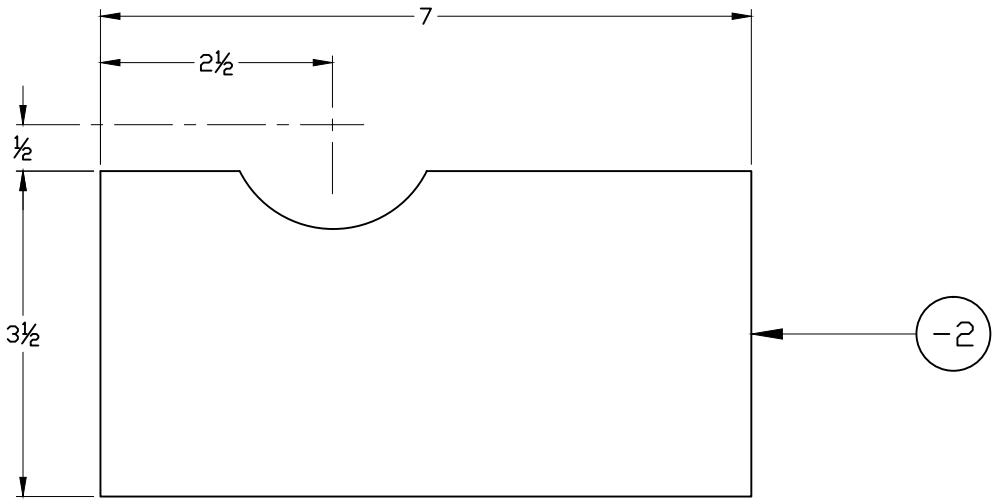

DETAIL A

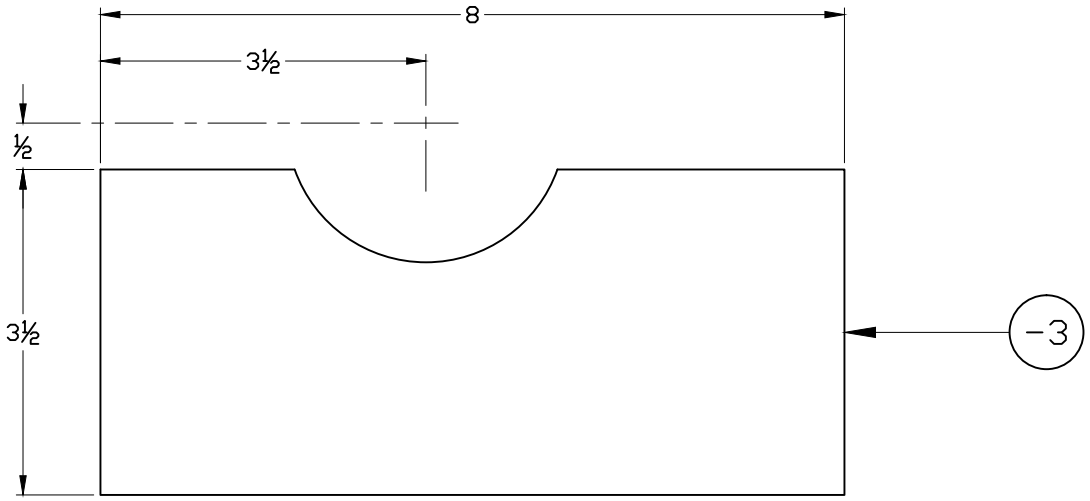

DETAIL B
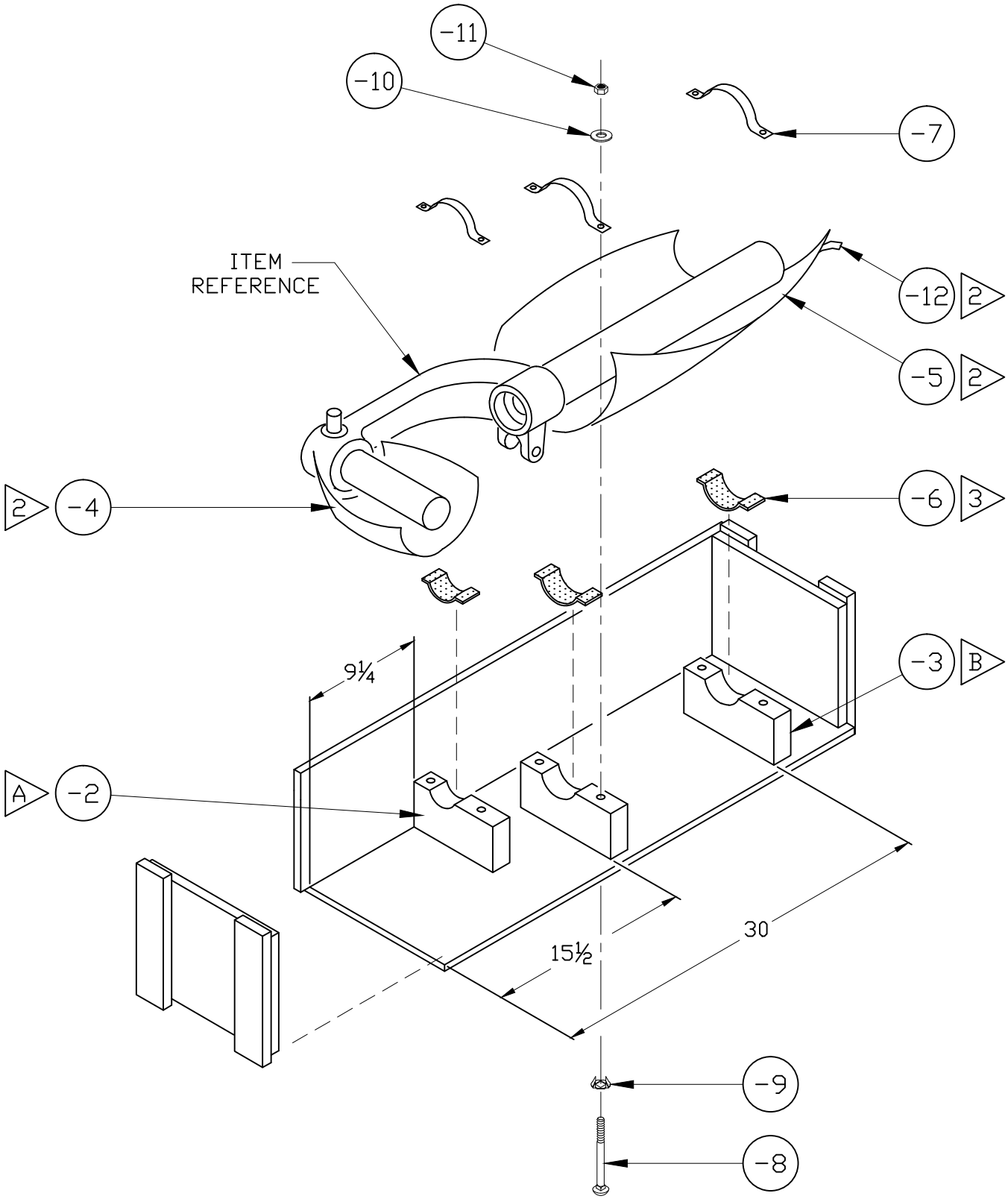
SPECIAL PACKAGING INSTRUCTION	CODE ID 98747	SPI NO. (TPO) F01-252-4042
ITEM NOMENCLATURE PISTON, LANDING GEAR STRUT		SHEET 5 OF 5