U.S. COAST GUARD
CIVIL ENGINEERING
CEU PROVIDENCE

BASE CAPE COD - HQ & AIRFIELD
BUZZARDS BAY, MASSACHUSETTS
16677450 REPLACE MEDIUM VOLTAGE TRANSFORMER CUTOFF SWITCHES
ELECT DIST SYSTEM (ALL)

DRAWING INDEX

SHEET ID	SHEET #	SHEET TITLE
G-001	01	COVER SHEET
E-101	02	SITE PLAN
E-401	03	ENLARGED SITE PLANS
E-501	04	DETAILS
E-601	05	ONE LINE DIAGRAM

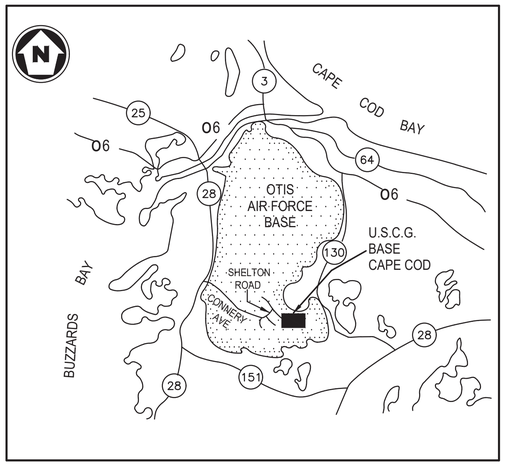

VICINITY MAP
SCALE: NTS

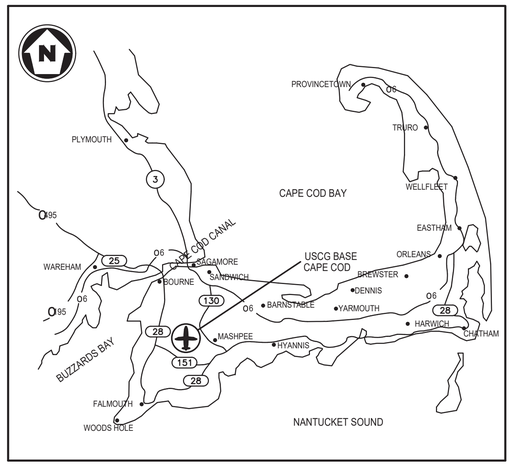

LOCATION MAP
SCALE: NTS

LEGEND

- SECTION NUMBER (D3 / E-501): SHEET WHERE SECTION IS SHOWN
- DETAIL NUMBER (D3 / E-501): SHEET WHERE DETAIL IS SHOWN

SYMBOLS

#	NUMBER
'	FEET
"	INCHES
Y	WYE
1/C	SINGLE CONDUCTOR
	TRANSFORMER
	FUSED OIL CUTOUT SWITCH
	LOAD BREAK ELBOW WITH INSERT
R	GROUND ROD
	LOAD BREAK SWITCH
	INTERNAL FUSE
	LIGHTNING ARRESTER W/GROUND
	SPLICE OR JUNCTION
KWH/D	KILOWATT HOUR DEMAND METER
	CURRENT TRANSFORMER
	FENCE
	AIR BREAK SWITCH
	PROTECTIVE CAP
	POWER POLE
	SWITCH
E	ELECTRICAL
T	TELECOM
T	TRANSFORMER
E	ELECTRICAL MANHOLE
E	ELECTRICAL HANDHOLE
T	TELECOM MANHOLE
	UTILITY POLE

ABBREVIATIONS

BLDG	BUILDING
E.M.H.	ELECTRICAL MANHOLE
H.H.	HANDHOLE
N.T.S.	NOT TO SCALE

Digitally signed by CAROSOTTO.MICHAEL.P.1021033398
Date: 2026.01.09 10:39:08 -05'00'
MICHAEL P. CAROSOTTO, PE
APPROVING OFFICIAL — DATE

MICHAEL P. CAROSOTTO, PE
TECHNICAL DIRECTOR

DILL.DAVID.COLBY.1218495555
Digitally signed by DILL.DAVID.COLBY.1218495555
Date: 2026.01.09 09:48:56 -05'00'
DAVID DILL, PE
BRANCH CHIEF

U.S.C.G. CE
U.S. COAST GUARD CIVIL ENGINEERING

MARK	DESCRIPTION	DATE
0	ISSUED FOR BIDDING	JAN 2026

MEASUREMENT BAR: = 1" (HALF SIZE = 1/2")

A/E COMPANY:
A/E PROJECT NO.:
CONSULTING A/E:

USCG, CEU PROVIDENCE
475 KILVERT ST., SUITE 100
WARWICK, RI 02886

USCG PROJECT MANAGER: TESSIER, JOSHUA
DESIGNED BY: ET
DRAWN BY: JLM
EDITED BY: JLM
CHECKED BY: JT

USCG PROJECT NUMBER 16677450
USCG DRAWING SERIES NUMBER P16677450
USCG FILENAME P16677450C-001.dwg
SHEET 01 OF 05

REPLACE MEDIUM VOLTAGE TRANSFORMER CUTOFF SWITCHES
BASE CAPE COD - HQ & AIRFIELD
BUZZARDS BAY MA

GENERAL
COVER SHEET

SHEET ID
ELECT DIST SYSTEM (ALL)
G-001

NOTES:

ALL WORK SHALL BE PERFORMED IN ACCORDANCE WITH THE NATIONAL ELECTRICAL CODE LATEST EDITION OF NFPA 70, NATIONAL ELECTRICAL CODE (NEC) AND NATIONAL ELECTRICAL SAFETY CODE (ANSI C2) AND IN ACCORDANCE WITH ALL STATE AND FEDERAL CODES, DESIGN STANDARDS AND BEST PRACTICES.

ALL RGS CONDUITS SHALL BE SOLIDY GROUNDED BY THE CONTRACTOR WITH THE USE OF GROUND BUSHINGS AND 1/0 AWG BARE CU. WIRE.

THE CONTRACTOR SHALL MAKE ALL TERMINATIONS TO THE EQUIPMENT INDICATED IN ORDER TO OBTAIN A FULLY OPERATIONAL SYSTEM.

ALL ELECTRICAL EQUIPMENT SHALL BE INSTALLED AND SUPPORTED PER THE MANUFACTURER'S INSTRUCTIONS.

ALL MATERIAL AND EQUIPMENT PROVIDED BY THE CONTRACTOR SHALL BE NEW.

THE CONTRACTOR SHALL BE RESPONSIBLE FOR DAMAGE TO ANY EXISTING UTILITIES OR EQUIPMENT CAUSED BY HIS WORK. REPAIRS OR REPLACEMENT SHALL BE AT THE DIRECTION OF THE GOVENRMENT AT NO COST TO THE GOVERNMENT.

ALL EXPOSED AND DISTURBED SOIL SURFACES SHALL BE RESTORED TO ORIGINAL CONDITION BY THE CONTRACTOR (SEE SPECIFICATIONS).

THE CONTRACTOR SHALL GIVE FOURTEEN DAYS WRITTEN NOTICE OF ANY OPERATIONS OR CONNECTIONS WHICH MAY CAUSE INTERRUPTION OF THE FACILITIES, AND SHALL MUTUALLY AGREE WITH THE ENGINEERING OFFICER AS TO THE TIME AND DURATION SUCH INTERRUPTIONS MAY BE PERFORMED WITH THE LEAST DISRUPTION TO FACILITY OPERATIONS.

THE CONTRACTOR SHALL GIVE FOURTEEN DAYS WRITTEN NOTICE OF ANY OPERATIONS OR CONNECTIONS WHICH MAY CAUSE SITE POWER INTERRUPTIONS OF THE FACILITIES. CONTRACTOR SHALL COORDINATE OUTAGE REQUESTS AND SCHEDULING OF CUTOVER WORK WITH THE ENGINEERING OFFICER AND CONTRACTING OFFICER. OUTAGES SHALL BE LIMITED TO 4 HOURS.

POWER OUTAGES SHALL BE LIMITED TO A MAXIMUM (4) HOURS PER 24 HOUR PERIOD. IF MORE TIME IS NEEDED, CONTRACTOR SHALL PROVIDE TEMPORARY POWER FOR ALL FACILITIES LISTED DURING SITE POWER INTERRUPTIONS. EQUIPMENT SHALL BE INSTALLED AND OPERATING BEFORE THE PERIOD OF POWER INTERRUPTION BEGINS. TEMPORARY POWER SHALL BE RATED AT 100% OF THE LOAD BEING SERVED. THE CONTRACTOR SHALL ENSURE CONNECTIONS ARE SECURED AND SAFEGUARDED FOR THE SAFETY OF UNAUTHORIZED PERSONNEL. THE CONTRACTOR SHALL PROVIDE A DETAILED PLAN TO THE COAST GUARD THAT INCLUDES THE TEMPORARY GENERATOR SIZE, EXPECTED FUEL CONSUMPTION, EXPECTED FUEL CAPACITY, LOAD CALCULATIONS, AND AN AFTER HOURS SERVICE REPRESENTATIVE FOR EMERGENCY MAINTENANCE OF GENERATOR IN CASE OF UNEXPECTED FAILURE. THIS SERVICE REPRESENTATIVE SHALL RESPOND TO PHONE CALL WITHIN ONE HOUR AND SHALL BE ON SITE WITHIN 3 HOURS OF EMERGENCY CALL.

UPON COMPLETION OF EACH WORK DAY, THE CONTRACTOR SHALL ENSURE THERE ARE NO EXPOSED LIVE PARTS AND SECURE THE ENTIRE CONSTRUCTION AREA VIA A LOCKED, 6' HIGH CHAIN LINK FENCE, WITH WARNING SIGNS, FOR THE SAFETY OF UNAUTHORIZED PERSONNEL.

CONTRACTOR SHALL EXTEND ALL EXISTING 5KV CABLES AS NECESSARY FOR THE INSTALLATION OF NEW 5KV DISTRIBUTION SWITCHES.

ALL LOAD BREAK ELBOWS SHALL BE GROUNDED UTILIZING TAPE SHIELD ADAPTER KITS.

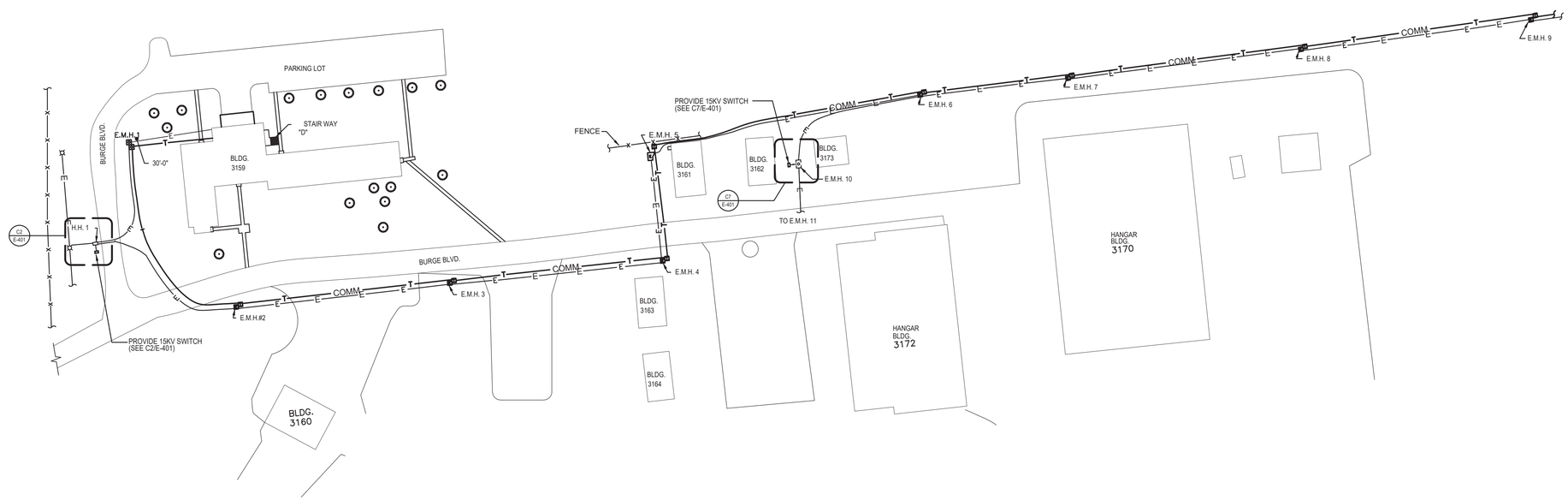

PLAN NORTH
TRUE

C1 SITE PLAN
SCALE: 1" = 80'

0 80' 160'

US COAST GUARD
CIVIL ENGINEERING

MARK	DESCRIPTION	DATE
0	ISSUED FOR BIDDING	JAN 2026

MEASUREMENT BAR: = 1" (HALF SIZE = 1/2")

A/E COMPANY:
A/E PROJECT NO.:
CONSULTING A/E:

USCG, CEU PROVIDENCE
475 KILVERT ST., SUITE 100
WARWICK, RI 02822

USCG PROJECT MANAGER:
TESSIER, JOSHUA

DRAWN BY: JJM
DESIGNED BY: JT
EDITED BY: JJM
CHECKED BY: JT

USCG PROJECT NUMBER
16677450

USCG DRAWING SERIES NUMBER
P16677450

USCG FILENAME
P16677450C-101.dwg

SHEET 02 OF 05

REPLACE MEDIUM VOLTAGE TRANSFORMER CUTOFF SWITCHES
BASE CAPE COD - HQ & AIRFIELD
BUZZARDS BAY MA

ELECTRICAL
SITE PLAN

SHEET ID
ELECT DIST SYSTEM (ALL)
E-101

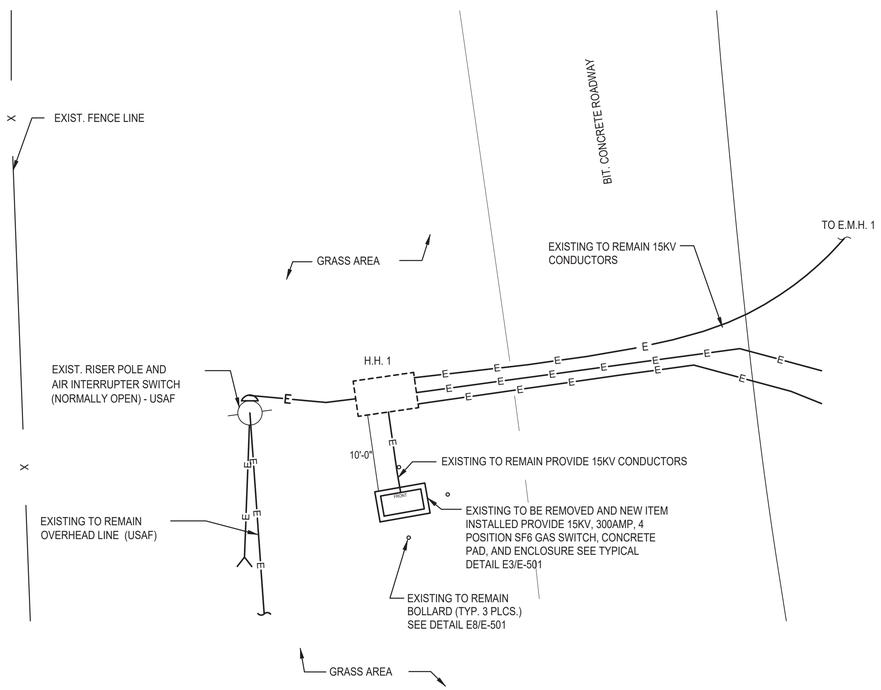

C2 ENLARGED SITE PLAN H.H. 1/SWITCH 86937

SCALE: 1" = 10'

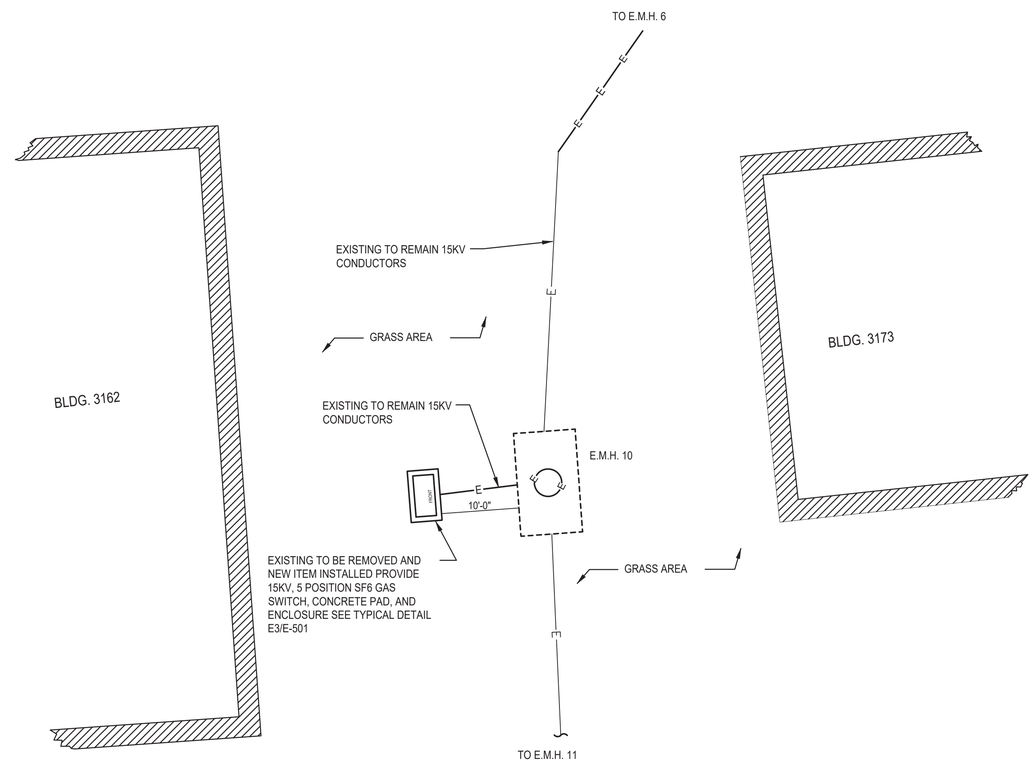

C7 ENLARGED SITE PLAN E.M.H. 10/SWITCH 86936

SCALE: 1" = 10'

U. S. C. G.
US COAST GUARD
CIVIL ENGINEERING

MARK	DESCRIPTION	DATE
0	ISSUED FOR BIDDING	JAN 2026

MEASUREMENT BAR: = 1" (HALF SIZE = 1/2")

AE COMPANY:
AE PROJECT NO.:
CONSULTING A/E:

USCG, CEU PROVIDENCE
475 KILVERT ST., SUITE 100
WARWICK, RI 02822

USCG PROJECT MANAGER:
TESSIER, JOSHUA

DESIGNED BY: JT
DRAWN BY: JJM
EDITED BY: JJM
CHECKED BY: JT

USCG PROJECT NUMBER 16677450
USCG DRAWING SERIES NUMBER P16677450
USCG FILENAME P16677450C-401.dwg
SHEET 03 OF 05

REPLACE MEDIUM VOLTAGE TRANSFORMER CUTOFF SWITCHES
BASE CAPE COD - HQ & AIRFIELD
BUZZARDS BAY MA

ELECTRICAL
ENLARGED SITE PLANS

SHEET ID
ELECT DIST SYSTEM (ALL)
E-401

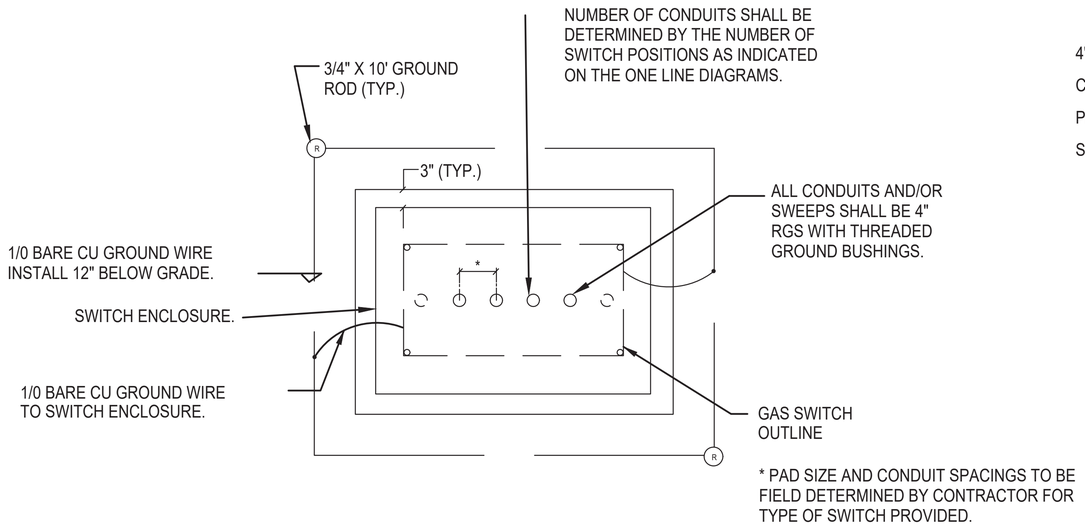

E3 EXISTING GAS SWITCH PAD (TYP.)
SCALE: N.T.S.

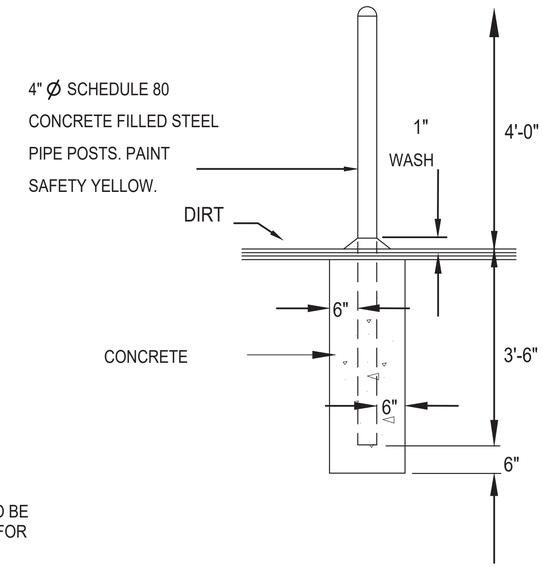

E8 EXISTING BOLLARD DETAIL (TYP.)
SCALE: N.T.S.

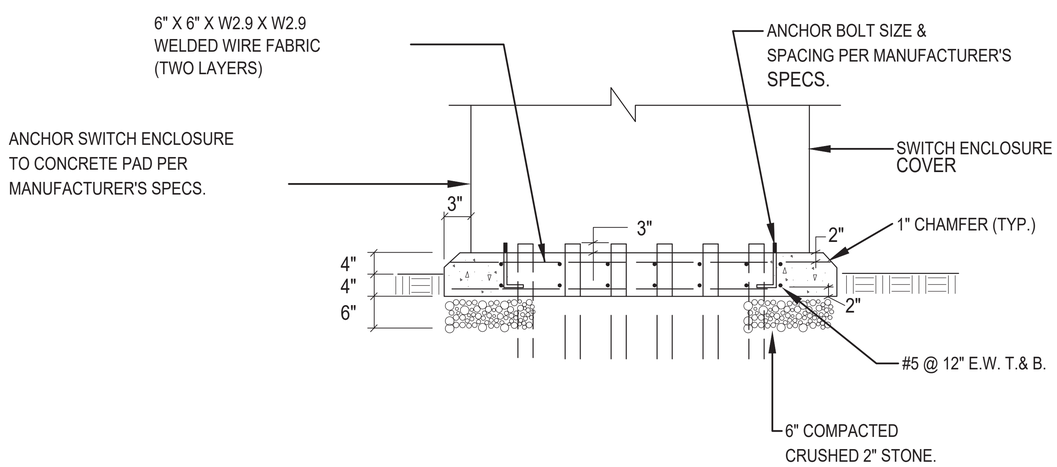

A3 EXISTING GAS SWITCH PAD (TYP.) SECTION VIEW
SCALE: N.T.S.

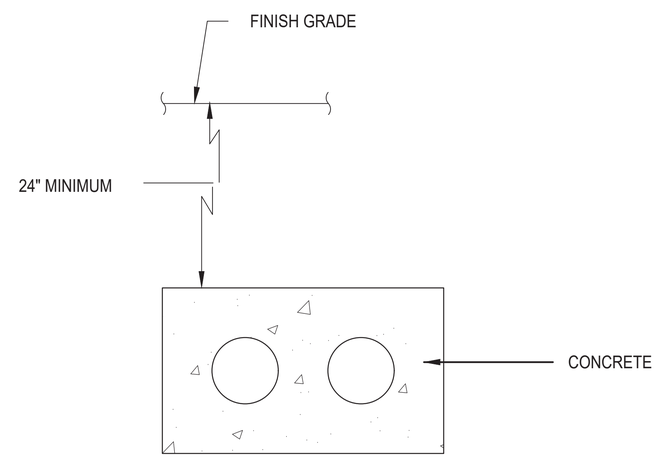

A8 EXISTING DUCT BANK (TYP.)
SCALE: N.T.S.

U.S.C.G. CE
US COAST GUARD CIVIL ENGINEERING

MARK	DESCRIPTION	DATE
0	ISSUED FOR BIDDING	JAN 2028

MEASUREMENT BAR: = 1" (HALF SIZE = 1/2")

AE COMPANY:
AE DESIGN COMPANY'S PHONE NUMBER
A/E PROJECT NO.:
CONSULTING A/E:

USCG, CEU PROVIDENCE
475 KILVERT ST., SUITE 100
WARWICK, RI 02886
USCG PROJECT MANAGER:
TESSIER, JOSHUA
DESIGNED BY: JT
DRAWN BY: JLM
EDITED BY: JLM
CHECKED BY: JT

USCG PROJECT NUMBER 16677450
USCG DRAWING SERIES NUMBER P16677450
USCG FILENAME P16677450A-501.dwg
SHEET 04 OF 05

REPLACE MEDIUM VOLTAGE TRANSFORMER CUTOFF SWITCHES
BASE CAPE COD - HQ & AIRFIELD
BUZZARDS BAY MA
ELECTRICAL
DETAILS

SHEET ID
ELECT DIST SYSTEM (ALL)
E-501

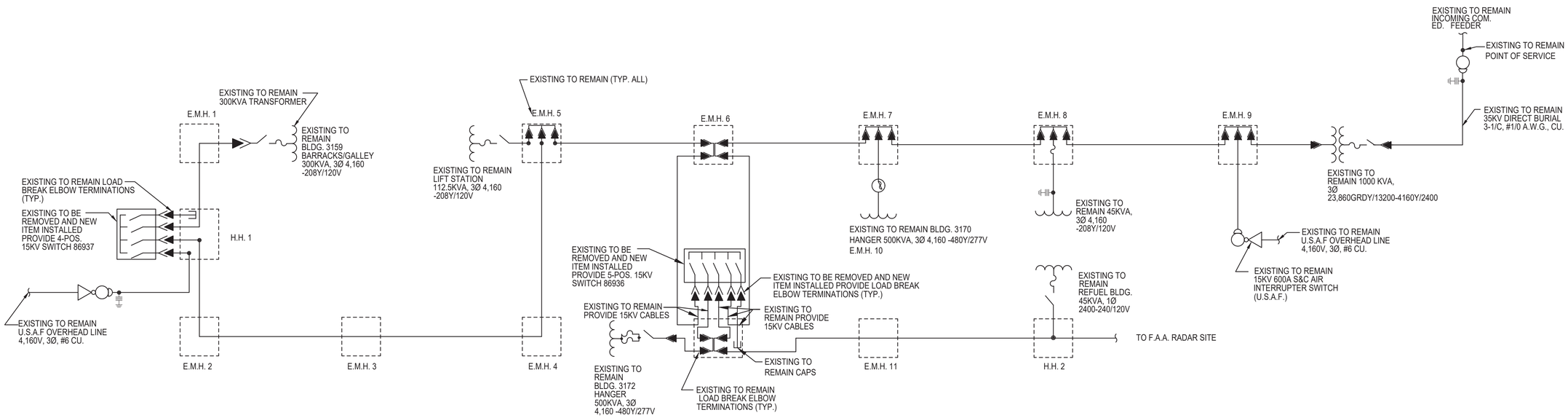

C1 ONE-LINE DIAGRAM 4,160 VOLT SYSTEM - U.S.C.G.

SCALE: N.T.S.

U.S.C.G.
US COAST GUARD
CIVIL ENGINEERING

MARK	DESCRIPTION	DATE
0	ISSUED FOR BIDDING	JAN 2028

MEASUREMENT BAR: = 1" (HALF SIZE = 1/2")

A/E COMPANY:
A/E PROJECT NO.:
CONSULTING A/E:

USCG, CEU PROVIDENCE
475 KILVERT ST., SUITE 100
WARWICK, RI 02886

USCG PROJECT MANAGER:
TESSIER, JOSHUA

DRAWN BY: JJM
CHECKED BY: JT
DESIGNED BY: JT
EDITED BY: JJM

USCG PROJECT NUMBER
16677450

USCG DRAWING SERIES NUMBER
P16677450

USCG FILENAME
P16677450A-601.dwg

SHEET 05 OF 05

REPLACE MEDIUM VOLTAGE TRANSFORMER CUTOFF SWITCHES
BASE CAPE COD - HQ & AIRFIELD
BUZZARDS BAY MA

ELECTRICAL

ONE-LINE DIAGRAM 4,160 VOLT SYSTEM

SHEET ID
ELECT DIST SYSTEM (ALL)
E-601