Micro Power Wave

Single Phase, 200, 300, or 490 Watts

LIGHT COMPACT INVERTER SOLUTION

The Micro Power Wave is specifically designed for compact emergency lighting applications that comes with standard 90 minute battery backup with up to 490W. Both inverter electronics and batteries are fit into a single compact enclosure and is available with two mounting configurations: Wall Mounting or Floor Mounting Brackets (optional).

Scan QR Code

For the latest product news, technical specs, drawings, guides and manuals.

STANDARD FEATURES

- 90 Minute Back up at Full Load
- Listed to UL924 & UL1778 by ETL
- Compatible with Self-Ballast Fluorescent, Incandescent, Halogen, Quartz Re-strike, HID, HPS and LED
- True Online, Double Conversion, Technology with **Zero Transfer Time**
- High Frequency Pulse Width Modulation (PWM) for Pure Sine Wave Output
- Small Footprint with Front Access
- LED Indicator w/ LCD Display for Local Diagnostics
- Audible Alarm Indicators
- Main Input, Main Output and Battery Breakers
- Input Voltage Regulation & Conditioning
- Wall Mounting
- Self-Testing/Battery Exerciser and Event Logger

OPTIONAL FEATURES

- Communication (select one):
  - SNMP/Web Card
  - RS-232
  - Dry Contact
  - USB Communication Port w/ Monitoring Software
- Input TVSS
- Normally ON or Normally OFF Auxiliary Output Circuit Breakers (3 Max)
- Remote Status Panel
- Floor Mounting Brackets
- Load Control Relays
- Maintenance:
  - Extended Warranty
  - Preventative Maintenance Plans

OnLine Power, Inc. | Los Angeles, CA | Tel. 1-800-227-8899 | sales@onlinepower.com | www.onlinepower.com

© Copyright OnLine Power, Inc. All rights reserved. Specifications subject to change without prior notification.

100-DS-4-24

NFPA CODES & STANDARDS COMPLIANT

MADE IN USA

SPECIFICATIONS

Micro Power Wave

Single Phase
200, 300, and 490 Watts

*All units are 90 minutes battery backup time @ full load.
Consult factory for backup times (up to 120 minutes)

INPUT
AC Voltage: 120V ±10% or 277V
Frequency: 60Hz ± 4Hz

OUTPUT
AC Voltage: 120V or 277V
Voltage Regulation: ±2%
Wave Form: Sinusoidal
Harmonic Distortion: < 3% of THD at linear load

PROTECTION
Overload: 125% for 1 min and 150% for 10 sec
Short Circuit Protection: Input/Output Breaker

BATTERY
Battery: Sealed, maintenance free lead acid battery
Recharge Time: Conforms to UL standards

ENVIRONMENT
Operating Temperature: 0° to 40°C / 32° - 104°F
Battery: -20 ~ 50°C / -4 ~ 122°F
Storage Temperature: -20° to 60°C (-4° - 140°F)
Humidity: 0 - 95% Non-condensation
Altitude: Up to 10,000 ft

SAFETY STANDARDS
UL924, UL1778, NFPA101, NFPA70, NEC, and OSHA

Cabinet Dimension

24”W x 17”H x 9.5”D
(Inches) Width x Height x Depth

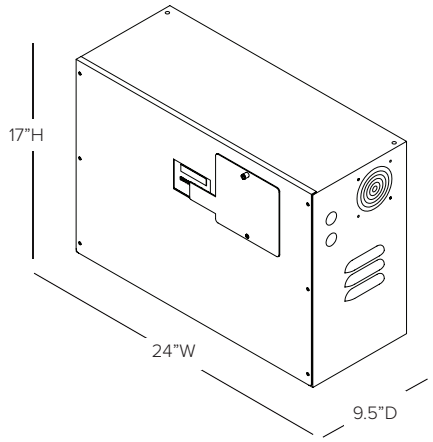

Wall Mounting (Standard)

24”W x 22”H x 9.5”D
(Inches) Width x Height x Depth

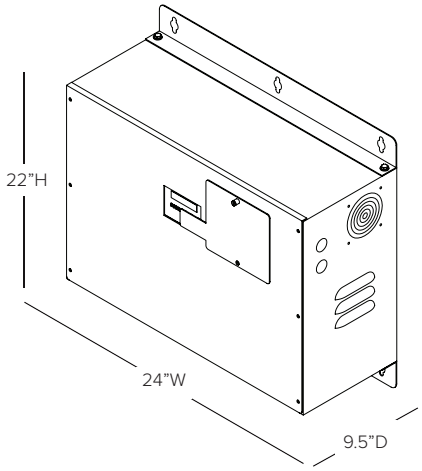

Floor Mounting (Optional)

24”W x 19.25”H x 9.5”D
(Inches) Width x Height x Depth

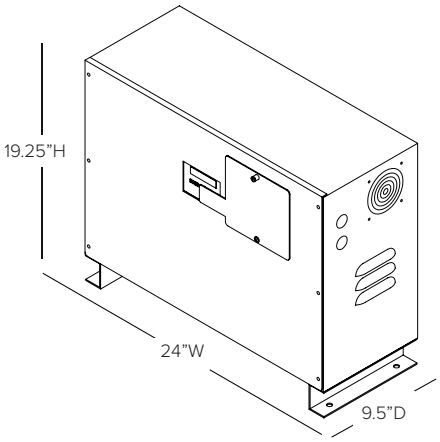

Monitoring Panel

Front Panel: 2 x 20 Display Status Alarm and Diagnostic

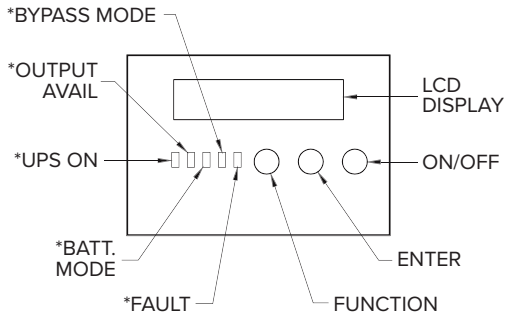

Refer to techinical data sheet for additonal details.

Model Numbers

Watts	Model	Input / Output (V)	BTU/HR*	Weight (LBs)
200	WM.20A01OP	120 / 120	216	132
	WM.20A25OP	120 / 277	233	136
	WM.20R01OP	277 / 120	233	139
	WM.20R25OP	277 / 277	233	136
300	WM.30A01OP	120 / 120	305	132
	WM.30A25OP	120 / 277	353	136
	WM.30R01OP	277 / 120	353	139
	WM.30R25OP	277 / 277	353	136
490	WM.49A01OP	120 / 120	499	244
	WM.49A25OP	120 / 277	543	248
	WM.49R01OP	277 / 120	543	251
	WM.49R25OP	277 / 277	543	248

*BTU/HR are approximate numbers with tolerance +15% for all models

Warranty

Standard warranty is eighteen (18) months from ship date or twelve (12) months from start up, whichever occurs first. Optional second year warranty with factory performed preventative maintenance available.

ISO9001 Certified Since 1996
NFPA CODES & STANDARDS COMPLIANT
MADE IN USA

OnLine Power, Inc. | Los Angeles, CA | Tel. 1-800-227-8899 | Fax: 1-323-721-3929 | sales@onlinepower.com | www.onlinepower.com
© Copyright OnLine Power, Inc. All rights reserved. Specifications subject to change without prior notification.

ORDERING GUIDE

PROJECT NAME :	DATE :
REP / DISTRIBUTOR :	ELECTRICAL DESIGNER / ENGINEER :

ORDER NUMBER **DOES NOT** REFLECT MODEL NUMBER. PLEASE CONSULT FACTORY.

Micro Power Wave

Example: WM-.49-R25OP-LCR20A(3)-RS232-N(3)-EXT

WM-

WM — MODEL SERIES

WM: Micro Power Wave

.49 — WATTS RATING

.20 - 200W
.30 - 300W
.49 - 490W

R25OP — VOLTAGE INPUT/OUTPUT

INPUT	OUTPUT
A - 120V	**01OP -** 120V
R - 277V	**25OP -** 277V

S90 — BATTERY TYPE

* **S90:** Standard @ 90min
* **U90:** USA @ 90min
* (required for BAA and BABA compliance)

LCR20A(3) + RS232 — OPTIONS

PICK ANY:

TVSS: Input Transient Voltage Surge Suppressor (Class C)

LCR20A(#): Load Control Relay, Single Flex Stud Mounting (#): Qty

LCR20(#): Load Control Relay, No Flex (#): Qty

FLR: Floor Mounting Brackets

P: Remote Status Panel (Hard Wired with Extended Cable)

MONITORING:
PICK ONE ONLY

RS232: RS-232
SNMP: Remote Log Access
DCT: Dry Contact
USB: USB Port

AUX BREAKERS:
STANDARD: 10 AMP

First Pick One:
N: Normally ON
***F:** Normally OFF

Second Pick One:
(#): # of Breakers, up to 3 Max

Example:
N(3): 3 Normally ON Breakers

*Power is only supplied to circuit when utility power is lost.

EXT — WARRANTY & SERVICES

PICK ANY:

Blank: Standard Warranty

EXT: Additional One Year Extended Warranty (Includes First Year PM)

T1: Additional 4 hour Training at Time of Start Up

T2: Additional Training Day up to 8 hours

© Copyright OnLine Power, Inc. All rights reserved. Specifications subject to change without prior notification.