Micro Power Wave

Single Phase, 200, 300, or 490 Watts

LIGHT COMPACT INVERTER SOLUTION

The Micro Power Wave is specifically designed for compact emergency lighting applications. Standard features such as self-testing and recorded logs help you meet your UL924 and NFPA 101 requirements without the need of a maintenance team.

Scan QR Code

For the latest product news, technical specs, drawings, guides and manuals.

STANDARD FEATURES

- 90 Minute Back up at Full Load
- Certified to UL924 and UL1778 Standards by Intertek
- Compatible with Incandescent, HID, LED, and Fluorescent Lamp (Full Lumen Output)
- True Online, Double Conversion, Technology with **Zero Transfer Time**
- High Frequency Pulse Width Modulation (PWM) for Pure Sine Wave Output
- Small Footprint with Front Access
- LED Indicator w/ LCD Display for Local Diagnostics
- Audible Alarm Indicators
- Main Input, Main Output and Battery Breakers
- Input Voltage Regulation & Conditioning
- Battery Exerciser and Event Logger with LCD Display

OPTIONAL FEATURES

- Communication (select one):
  - SNMP/Web Card
  - RS-232
  - Dry Contact
  - USB Communication Port w/ Monitoring Software
- Input TVSS
- Normally ON or Normally OFF Auxiliary Output Circuit Breakers (3 Max)
- Floor Mount Brackets
- Maintenance:
  - Extended Warranty
  - Preventative Maintenance Plans

ISO9001 Certified Since 1996

OnLine Power, Inc. | Los Angeles, CA | Tel. 1-800-227-8899 | sales@onlinepower.com | www.onlinepower.com
© Copyright OnLine Power, Inc. All rights reserved. Specifications subject to change without prior notification.
100-DS-2-22

NFPA CODES & STANDARDS COMPLIANT

MADE IN USA

SPECIFICATIONS

Micro Power Wave

Single Phase
200, 300, and 490 Watts

*All units are 90 minutes battery backup time @ full load.
Consult factory for backup times (up to 120 minutes)

INPUT
AC Voltage: 120 or 277 ±10%
Frequency: 60Hz +/- 4Hz

OUTPUT
AC Voltage: 120 or 277
Voltage Regulation: ±2%

PROTECTION
Overload: 125% for 1 min and 150% for 10 sec
Short Circuit Protection: Input/Output Breaker

BATTERY
Battery: Sealed, maintenance free lead acid battery
Recharge Time: Conforms to UL standards

ENVIRONMENT
Operating Temperature: 0° to 40°C / 32° - 104°F
Battery: 20° to 25°C (68° - 77°F)
Storage Temperature: -20° to 60°C (-4° - 140°F)
Humidity: 0 - 95% Non-condensation
Altitude: Up to 10,000 ft

SAFETY STANDARDS
UL924, NFPA101, NFPA70, NEC, and OSHA

Cabinet Dimension

24”W x 17”H x 9.5”D
(Inches) Width x Height x Depth

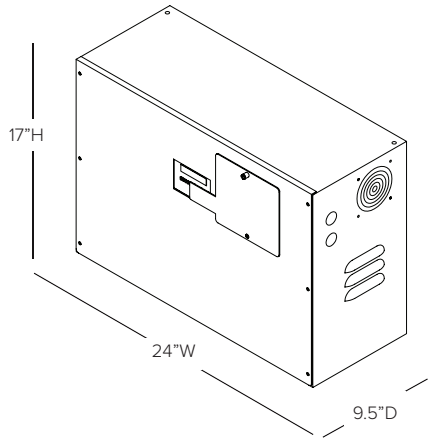

Standard Mounting

24”W x 22”H x 9.5”D
(Inches) Width x Height x Depth

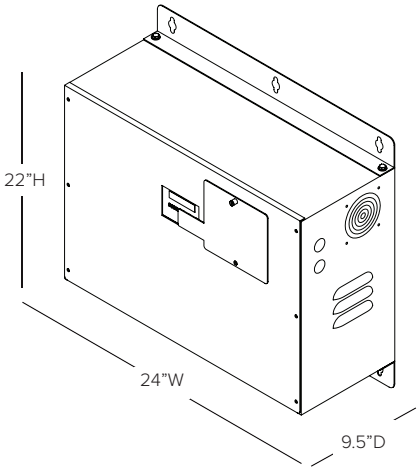

Floor Mount (Optional)

24”W x 19.25”H x 9.5”D
(Inches) Width x Height x Depth

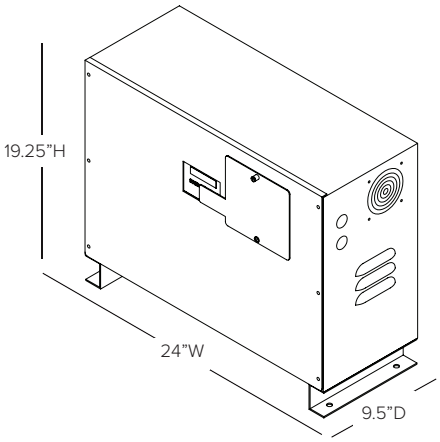

Monitoring Panel

Front Panel: 2 x 20 Display Status Alarm and Diagnostic

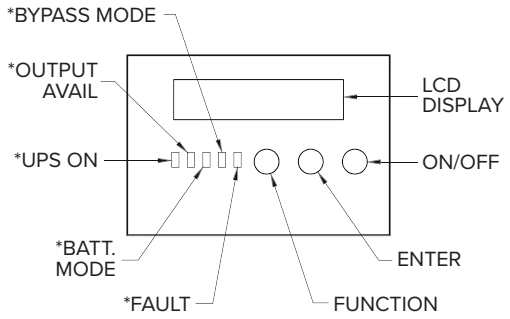

Refer to techinical data sheet for additonal details.

Model Numbers

Watts	Model	Input / Output (V)	BTU/HR*	Weight (LBs)
200	WM.20A01OP	120 / 120	216	132
	WM.20A25OP	120 / 277	233	136
	WM.20R01OP	277 / 120	233	139
	WM.20R25OP	277 / 277	233	136
300	WM.30A01OP	120 / 120	305	132
	WM.30A25OP	120 / 277	353	136
	WM.30R01OP	277 / 120	353	139
	WM.30R25OP	277 / 277	353	136
490	WM.40A01OP	120 / 120	499	244
	WM.40A25OP	120 / 277	543	248
	WM.40R01OP	277 / 120	543	251
	WM.40R25OP	277 / 277	543	248

*BTU/HR are approximate numbers with tolerance +15% for all models

Warranty

Standard warranty is eighteen (18) months from ship date or twelve (12) months from start up, whichever occurs first.

ISO9001 Certified Since 1996
NFPA CODES & STANDARDS COMPLIANT
MADE IN USA

OnLine Power, Inc. | Los Angeles, CA | Tel. 1-800-227-8899 | Fax: 1-323-721-3929 | sales@onlinepower.com | www.onlinepower.com
© Copyright OnLine Power, Inc. All rights reserved. Specifications subject to change without prior notification.

ORDERING GUIDE

PROJECT NAME :	DATE :
REP / DISTRIBUTOR :	ELECTRICAL DESIGNER / ENGINEER :

ORDER NUMBER **DOES NOT** REFLECT MODEL NUMBER. PLEASE CONSULT FACTORY.

Micro Power Wave

Example: WM-.49-R25OP-TVSS-RS232-N(3)-EXT

WM-

WM — MODEL SERIES

WM: Micro Power Wave

.49 — WATTS RATING

.20 - 200W
.30 - 300W
.49 - 490W

R25OP — VOLTAGE INPUT/OUTPUT

INPUT	OUTPUT
A - 120V	**01OP -** 120V
R - 277V	**25OP -** 277V

TVSS + RS232 + N(3) — OPTIONS

PICK ANY:

TVSS: Input Transient Voltage Surge Suppressor (Class C)
FLR: Floor Mount Brackets

MONITORING:
PICK ONE:

RS232: RS-232
SNMP: Remote Log Access
DCT: Dry Contact
USB: USB Port

AUX BREAKERS:

First Pick One:
N: Normally ON
***F:** Normally OFF

Second Pick One:
(#): # of Breakers, up to 3 Max

Example:
N(3): 3 Normally ON Breakers

*Power is only supplied to circuit when utility power is lost.

EXT — WARRANTY & SERVICES

PICK ANY:
Blank: Standard Warranty

ADDITIONAL:
EXT : Additional One Year Extended Warranty (Includes First Year PM)

T1 : 4 Hour Training at Time of Start Up

T2 : Additional Training Day up to 8 Hours

© Copyright OnLine Power, Inc. All rights reserved. Specifications subject to change without prior notification.