Nano Wave

Single Phase, 35W and 100W
Remote Emergency Inverter (REI)

LITHIUM ION BATTERY DIMMING INVERTERS

Online Power UL 924 Nano Series Remote Emergency Lighting Inverters provide pure sinusoidal emergency power for LED and fluorescent fixtures during loss of normal AC power. Nano Series inverters deliver a minimum of 90 minutes of operation in accordance with Life Safety Code requirements and can be derated for 2-hour operation. These inverters are designed for use in emergency lighting systems where reliable, regulated power is required to support code-compliant egress illumination.

ADDITIONAL INFORMATION

Nano Series inverters may be used as stand-alone emergency power sources or in conjunction with 0–10 Vdc controlled dimmable luminaires. These systems are compatible with single-channel and multi-channel LED drivers, as well as Type A, B, or C TLED lamps.

During a loss of normal AC power, the inverter transitions to emergency mode and supplies regulated emergency power through 0–10 Vdc emergency dimming control. Emergency dimming allows connected lighting loads to be reduced to the appropriate light level required to maintain the rated emergency output.

Nano Wave 35W supports connected luminaires up to 175W and delivers 35W rated emergency output.

100REI supports connected luminaires up to 500W when using 0–10 Vdc emergency dimming and delivers 100W rated emergency output.

Scan QR Code
For the latest product news, technical specs, drawings, guides and manuals.

STANDARD FEATURES

- Lithium Ion Battery
- Built-In UL 924 Compliant Auto Transfer Relay
- 90 Minute Backup at Full Load can be derated to 2 hours
- Listed to UL924 Safety Standards
- Compatible with Fluorescent and LED fixtures
- Manual Test Switch
- CEC Title 20 Compliant
- 5 Year Warranty

CEC TITLE 20

*Required for Sale in CA

OnLine Power, Inc. Tel. 1-800-227-8899 | sales@onlinepower.com | www.onlinepower.com
© Copyright OnLine Power, Inc. All rights reserved. Specifications subject to change without prior notification.
225-DS-01-26
UL LISTED
NFPA CODES & STANDARDS COMPLIANT
TAA COMPLIANT

SPECIFICATIONS

Nano Wave Single Phase 35W and 200W **Lithium Ion Backup Emergency Inverters**	35REI	100REI
Emergency Power	35W	100W
Input Voltage - Universal	120-277 Vac	120-277 Vac
Operating Frequency	50/60 Hz	50/60 Hz
Output Voltage Auto Setting equal to input	120-277 Vac, 50/60 Hz	120-277 Vac, 50/60 Hz
Emergency Run Time	90 Minutes can be derated to 26W for 2 hours	90 Minutes can be derated to 75W for 2 hours
Emergency Dimming when using 0-10 Vdc systems	0–10 VDC dimming loads: 175W max connected, 35W emergency output Non-dimming loads: 35W max	0–10 VDC dimming loads: 500W max connected, 100W emergency output Non-dimming loads: 100W max
Testing	Manual Testing (Illuminated Test Switch)	Manual Testing (Illuminated Test Switch)
Weight	5.0 lbs	8.0 lbs
Operating Temperature ° C	0-50° C	0-50° C
Warranty	5 Years Full	5 Years Full
Approvals	UL Listed to CEC Title 20	UL Listed to CEC Title 20
Dimensions	20.7"L x 2.25"W x 2.05"H	19"L x 3.3"W x 2.5"H
Single or multiple luminaire operation	Yes	Yes
Remote Mounting Distance	300 ft (max. w/ 18ga wire)	1,000 ft (max. w/ 18ga wire)

MOUNTING INSIDE THE LUMINAIRE

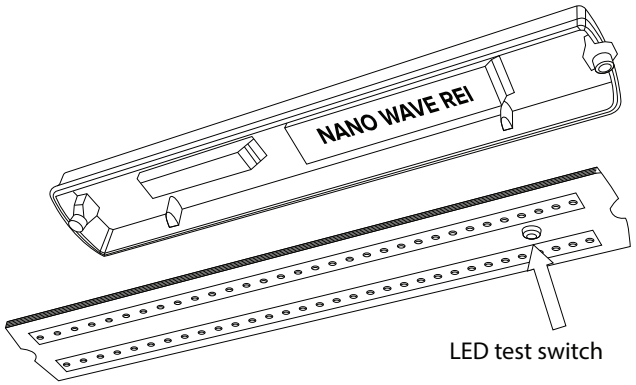

MOUNTING OUTSIDE THE LUMINAIRE

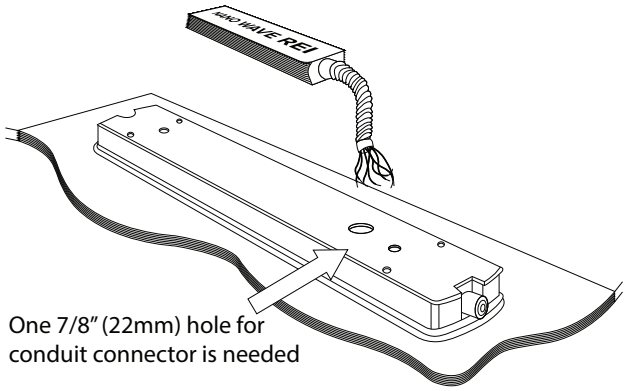

Warranty Standard warranty five year warranty.

ISO9001 Certified Since 1996

NFPA CODES & STANDARDS COMPLIANT

OnLine Power, Inc. | Los Angeles, CA | Tel. 1-800-227-8899 | Fax: 1-323-721-3929 | sales@onlinepower.com | www.onlinepower.com
© Copyright OnLine Power, Inc. All rights reserved. Specifications subject to change without prior notification.