Installation & User Manual

Nano Wave

Single Phase, 35W and 100W

UL924 Remote Emergency Inverters (REI)

225-MAN Rev. E

Due to continuous product improvement this document is subject to change without prior notice.

NOTICE: This document contains PROPRIETARY INFORMATION.
Reproduction or distribution FORBIDDEN!

This document contains proprietary and confidential information of Online Power, Inc. In consideration of the receipt of this document, the recipient agrees not to copy any of its contents, nor to disclose them to or allow them to be used by any person not currently an Online Power employee or an employee of the recipient having a need to know, without the express written consent of Online Power, and further agrees to surrender this document to Online Power when the reason for its receipt has terminated. Due to continuous product improvement this document is subject to change without prior notice.

© 2026 Online Power, Inc. – All rights reserved

Congratulations on selecting one of the fine products from Online Power, the leader in power protection technology. Our wide product offering includes UPS (Uninterruptible Power Systems), power conditioners, automatic voltage regulators and specialty transformers (e.g., computer-grade, medical-grade). Since our founding in 1972, Online Power has shipped many of these fine products to discerning customers around the world for use on sensitive equipment and in critical applications.

One of our goals is to make our manuals both comprehensive and easy to use. The new format of our user manual is the result of ideas and inputs from customers like you who have taken an active interest in our continued success. We invite and appreciate your feedback on our products and documentation via e-mail, fax, mail, or telephone.

HEADQUARTERS

SALES

Phone: (800)227-8899

Fax: (323) 721-3929

E-mail: sales@onlinepower.com

Office Hours are 7:00 AM to 5:00 PM PST

WARRANTY REGISTRATION AND WARRANTY CERTIFICATE REQUEST

www.800pwrsrvc.com

SERVICE

If you require assistance, please call our 24-hour toll free hot line 800-PWR-SRVC (800-797-7782) or email to info@800pwrsrvc.com. Please have the following information from your unit's nameplate available to speed assistance:

SERIAL NUMBER:	
KVA/POWER RATING:	
INPUT VOLTAGE:	
OUTPUT VOLTAGE:	
MANUFACTURER DATE:	

35REI Nano Inverter

INSTRUCTION MANUAL

- Emergency Power Equipment
- Universal Input/Output Pure Sine Wave Mini Inverter
- Output Voltage Auto Setting Equal to Input Voltage
- Emergency Dimming Auto Dimming (0-10V) of Connected Load up to 175W@120/277Vac

Scan QR Code
For the latest installation guide and user manual.

IMPORTANT SAFEGUARDS

WHEN USING ELECTRICAL EQUIPMENT, BASIC SAFETY PRECAUTIONS SHOULD ALWAYS BE FOLLOWED, INCLUDING THE FOLLOWING:

READ AND FOLLOW ALL SAFETY INSTRUCTIONS

1. Do not join battery connector until installation is completed and AC power is supplied to the emergency inverter.
2. This product is intended for use with an emergency LED lighting application at least 90 minutes in emergency mode.
3. An unswitched AC power source is required (120–277 VAC, 50/60 Hz) to power these units.
4. This product's chassis must be grounded.
5. This product is suitable for use in damp locations where the ambient temperature is 0 °C minimum to 50 °C maximum. This product is not suitable for heated air outlets and wet or hazardous locations.
6. This product contains a rechargeable LiFePO4 or Lithium-ion battery. The battery must be recycled or disposed of properly.
7. Make certain all connectors are in accordance with the National Electrical Code (NEC) or Canadian Electrical Code (CEC) and any local regulations.
8. This emergency inverter is suitable for both factory or field installation. For field installation, please see the instructions section.
9. Do not install near gas or electric heaters.
10. The use of accessory equipment not recommended by the manufacturer may cause an unsafe condition.
11. Do not use this product for applications other than the intended use.
12. Equipment should be mounted in locations and at heights where it will not be subjected to tampering by unauthorized personnel.
13. For Canadian applications, the output terminal should be in compliance with the accessibility requirement of the Canadian Electrical Code.
14. This device complies with Part 15 of the FCC Rules. Operation is subject to the following two conditions: (1) this device may not cause harmful interference, and (2) this device must accept any interference that may cause undesired operation.
15. To reduce the risk of electric shock, disconnect both normal and emergency power supplies and disconnect the battery connector of the emergency inverter before servicing.
16. Do not attempt to service the battery. A sealed, non-maintenance battery is used that is not field replaceable. Contact the manufacturer for information on service.
17. Servicing should be performed by qualified service personnel only.

Li-ion

This product contains a rechargeable li-ion battery.
The battery must be properly recycled or disposed.

SAVE THESE INSTRUCTIONS

CAUTION: Make certain the AC power is OFF and the inverter connector is disconnected until the installation is complete.

Note: Ensure the necessary branch circuit wiring is available. An unswitched source of power is required.

THIS PRODUCT IS SUITABLE FOR FIELD INSTALLATION. THERE ARE TWO (2) CHECKS TO DETERMINE IF YOUR LUMINAIRE IS ELIGIBLE FOR FIELD INSTALLATION.

- The emergency unit must be fed with 120–277 Vac (±10%).
- Follow the guidelines in Table 1 for the maximum connected load.

EMERGENCY INVERTER MODEL	LUMINAIRE(S) WITH 0-10 DIMMING	LUMINAIRE(S) WITHOUT 0-10V DIMMING
35REI	175W	35W

MAXIMUM POWER CAPACITY TABLE 1

Note: When using the dimming feature and connecting normal power loads greater than the inverter's power rating, the purple/white and pink/white lead wires must be connected to the luminaires AC driver dimming leads. See *Figure A* for the wiring diagram.

Note: After installation, measure the egress lighting illumination level to ensure compliance with national, state, and local code requirements.

The installation of this emergency LED inverter may vary depending on luminaire type; however, it generally follows two main steps.

STEP 1: INSTALLING THE EMERGENCY INVERTER

- **Disconnect** AC power from the LED luminaire.
- **Mount** the emergency inverter using the mounting tab and appropriate screws (not provided). Refer to the luminaires installation instructions for guidance on the recommended mounting location.
- **Note:** Attach the inverter to a metal surface.
- **Mounting Height:** Many factors influence emergency illumination levels, including lamp load selection, luminaire design, and environmental conditions. Therefore, end-use verification is necessary. For field installations, the mounting height and illumination levels must be measured in the final application to ensure that the minimum lumen requirements of national, state, and local codes are satisfied.

Lumens can be calculated by the following formula:

*Lumens in Emergency Mode = Lumens per Watt of Fixture * Output Power of Chosen Product*

(Lumens) = (lm/W) x (W)

STEP 2: WIRING THE EMERGENCY INVERTER

Select the appropriate wiring diagram to connect the emergency inverter:

- *Figure A: For use with 0–10V dimming function.*
- *Figure B: For use without 0–10V dimming function.*
- *Figure C: For applications where there is no dimming system, but the luminaire power is greater than that of the inverter. In this case, the 0–10V DC leads from the inverter must also be connected to the AC driver.*

Make sure all connections are in accordance with the National Electrical Code (NEC) and any local regulations.

After installation is complete, supply AC power to the emergency inverter and connect the battery connector. At this point, power should be supplied to the luminaire, and the Charging Indicator Light should illuminate, indicating that the battery is charging.

A short-term discharge test may be conducted after the emergency inverter has been charged for at least one hour.

A 24-hour charging period must be completed before performing a long-term discharge test.

CAUTION

THIS UNIT HAS MORE THAN ONE POWER CONNECTION POINT. TO REDUCE THE RISK OF ELECTRIC SHOCK, DISCONNECT BOTH THE BRANCH CIRCUIT BREAKERS OR FUSES, AND THE EMERGENCY POWER SUPPLIES BEFORE SERVICING.

OPERATION

During normal operation, AC power is applied to the inverter, and the charging indicator light is illuminated, indicating that the battery is charging.

When power fails, the emergency inverter automatically switches to emergency power (internal battery), operating for a minimum of 90 minutes.

The emergency inverter has an approximate 3-second transfer time to emergency mode; however, the actual transfer time may vary depending on the type of AC luminaire. When AC power is restored, the emergency inverter returns to charging mode.

MAINTENANCE

Although no routine maintenance is required to keep the emergency inverter functional, it should be checked periodically to ensure proper operation. The following maintenance schedule is recommended:

1. Monthly: Visually inspect the charging indicator light. It should be illuminated. If the light is off, contact technical support.
2. Every 30 days: Test the emergency operation of the fixture for a minimum of 30 seconds. The LED load should operate at reduced illumination.
3. Annually: Conduct a 90-minute discharge test. The LED load should operate at reduced illumination for at least 90 minutes.

REFER ANY SERVICING INDICATED BY THESE CHECKS TO QUALIFIED PERSONNEL.

RE-CHARGE BATTERY FOR 24/48 HOURS BEFORE 1-YEAR ANNIVERSARY DATE OF MANUFACTURE.
RECARGUE LA BATERÍA POR 24/48 HORAS ANTES DE 1 AÑO DE LA FECHA DE FABRICACIÓN.

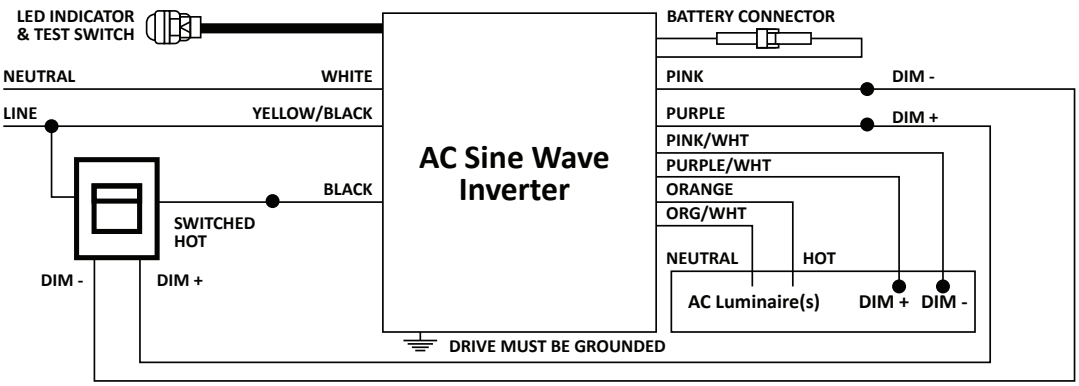

Figure A. Wiring Diagram with 0-10V Dimmer

175W Max. Connected Load

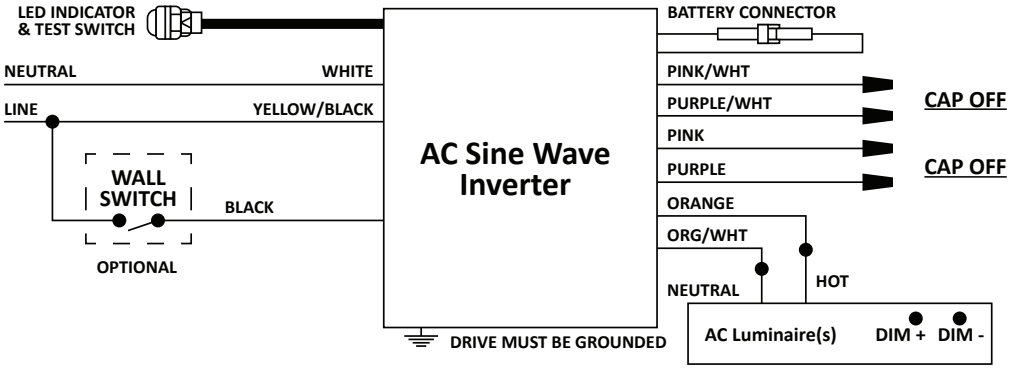

35W Max. Connected Load

Figure B. Wiring Diagram without 0-10V Dimmer

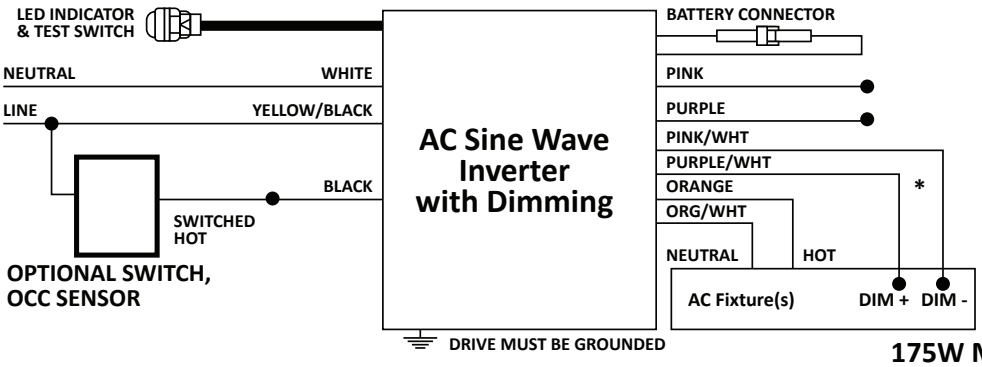

175W Max. Connected Load

Figure C. Wiring Diagram for High Power loads greater than the inverter power but when no dimmer is used- such as a highbay. Purple /White(+) and Pink/White(-) MUST be connected from micro inverter to the AC driver dim leads with proper polarity. See Table 1 for maximum connected normal power load.

100REI Nano Inverter

INSTRUCTION MANUAL

- Emergency Power Equipment
- Universal Input/Output Pure Sine Inverter
- Manual Testing (Illuminated Test Switch)
- 100W Max. connected load when not using 0-10 Vdc luminaires
- 500W Max. connected load when using 0-10 Vdc luminaires

Scan QR Code
For the latest installation guide and user manual.

IMPORTANT SAFEGAURDS

WHEN USING ELECTRICAL EQUIPMENT, BASIC SAFETY PRECAUTIONS SHOULD ALWAYS BE FOLLOWED, INCLUDING THE FOLLOWING:

READ AND FOLLOW ALL SAFETY INSTRUCTIONS

1. Do not join battery connector until installation is completed and AC power is supplied to the emergency inverter.
2. This product is intended for use with an emergency LED lighting application at least 90 minutes in emergency mode.
3. An unswitched AC power source is required (120-277 VAC , 50/60 Hz) to power these units.
4. This product's chassis must be grounded.
5. This product is suitable for use in damp locations where the ambient temperature is 0˚minimum, to 50˚ maximum. This product is not suitable for heated air outlets and wet or hazardous locations.
6. This product contains a rechargeable LiFePO4 or Lithium-ion battery. The battery must be recycled or disposed of properly.
7. Make certain all connectors are in accordance with the National Electrical Codes or Canadian Electrical Code and any local regulations.
8. This emergency inverter is suitable for both factory or field installation. For field installation, please see the instructions section.
9. Do not install near gas or electric heaters.
10. The use of accessory equipment is not recommended by the manufacturer may cause an unsafe condition.
11. Do not use this product for applications other than the intended use.
12. Equipment should be mounted in locations and at heights where it will not be subjected to tampering by unauthorized personnel.
13. For Canadian applications, the output terminal should be in compliance with the accessibility requirement of the Canadian Electrical Code.
14. This device complies with part 15 of the FCC Rules. Operation is suitable to the following two conditions: (1) This device may not cause harmful interference, and (2) This device must accept any interference that may cause undesired operation.
15. To reduce the risk of electric shock, disconnect both normal and emergency power supplies and disconnect the battery connector of the emergency inverter before servicing.
16. Do not attempt to service the battery. It is a sealed, no-maintenance battery is used that is not field replaceable. Contact the manufacturer for information on service.
17. Servicing should be performed by qualified service personnel only.

Li-ion

This product contains a rechargeable li-ion battery.
The battery must be properly recycled or disposed.

SAVE THESE INSTRUCTIONS

CAUTION: Make certain the AC power is off and the inverter connector is disconnected until the installation is complete.

Note: Make sure the necessary branch circuit wiring is available. An unswitched source of power is required.

THIS PRODUCT IS SUITABLE FOR FIELD INSTALLATION. THERE ARE TWO (2) CHECKS TO DETERMINE IF YOUR LUMINAIRE IS ELIGIBLE FOR FIELD INSTALLATION.

- The emergency unit must be fed with 120–277 Vac (±10%)
- Verify the total power of emergency luminaire(s) is less than the maximum power capacity with different inverter models.

EMERGENCY INVERTER MODEL	LUMINAIRE(S) WITH 0-10 DIMMING	LUMINAIRE(S) WITHOUT 0-10V DIMMING
100REI	500W	100W

MAXIMUM POWER CAPACITY TABLE 1

Note: After installation,it will be necessary to measure the egress lighting illumination level to ensure it complies with national state and local code requirement. Installation of this emergency LED inverter will vary based on the luminaire type, however generally follow two steps.

Note: *When using the Emergency DIM feature and connecting normal power loads of greater than the inverter power rating,the purple /white and pink/white lead wires MUST be connected to the luminaire(s) AC driver dimming leads. See Figure A wiring diagram.

STEP 1: INSTALLING THE EMERGENCY INVERTER

- **Disconnect** AC power from the LED luminaire.
- **Mount** the emergency inverter using the mounting tab and appropriate screws (not provided). Refer to the luminaires installation instructions for guidance on the recommended mounting location.
- **Note:** Attach the inverter to a metal surface.
- **Mounting Height:** Many factors influence emergency illumination levels, including lamp load selected, luminaire design, and environmental conditions. Therefore, end-use verification is necessary. For field installations, the mounting height and illumination levels must be measured in the end application to ensure that the minimum lumen requirements of national, state, and local codes are satisfied.

Lumens can be calculated by the following formula:

*Lumens in Emergency Mode = Lumens per Watt of Fixture * Output Power of Chosen Product*

(Lumens) = (lm/W) x (W)

STEP 2: WIRING THE EMERGENCY INVERTER

Select the appropriate wiring diagram to connect the emergency inverter with 0-10V dimming function (Figure A) or without the 0-10V dimming function(Figure B).

Make sure all connections are in accordance with the National Electrical Code and any local regulations. After installation is complete, supply AC power to the emergency inverter and join battery connector. At this point, power should be connected to luminaire, and the Charging Indicator Light should illuminate indicating the battery is charging.

A short-term discharge test may be conducted after the emergency inverter has been charged for one hour. A 24-hour charging period must be performed before conducting a long-term discharge test.

CAUTION

THIS UNIT HAS MORE THAN ONE POWER CONNECTION POINT. TO REDUCE THE RISK OF ELECTRIC SHOCK, DISCONNECT BOTH THE BRANCH CIRCUIT BREAKERS OR FUSES, AND THE EMERGENCY POWER SUPPLIES BEFORE SERVICING.

OPERATION

During normal operation AC power is applied, to the inverter, and the charging indicator light is illuminated, which indicates that the battery is being charged. When power fails, the emergency inverter will automatically switch to emergency power (internal battery), operating for a minimum of 90 minutes. The emergency inverter will have around 3 second transfer time to emergency mode, the actual transfer time will be varied based on different type of AC luminaire. When AC power is restored, the emergency inverter returns to the charging mode.

MAINTENANCE

Although no routine maintenance is required to keep the emergency inverter functional, it should be checked periodically to ensure proper operation. The following maintenance schedule is recommended:

1. Monthly: Visually inspect the charging indicator light. It should be illuminated. If the light is off, contact technical support.
2. Every 30 days: Test the emergency operation of the fixture for a minimum of 30 seconds. The LED load should operate at reduced illumination.
3. Annually: Conduct a 90-minute discharge test. The LED load should operate at reduced illumination for at least 90 minutes.

⚠ **REFER ANY SERVICING INDICATED BY THESE CHECKS TO QUALIFIED PERSONNEL.**

RE-CHARGE BATTERY FOR 24/48 HOURS BEFORE 1-YEAR ANNIVERSARY DATE OF MANUFACTURE. RECARGUE LA BATERÍA POR 24/48 HORAS ANTES DE 1 AÑO ANIVERSARIO FECHA DE FABRICACIÓN.

100REI SYSTEM WIRING DIAGRAM

NOTE: A short-term discharge test may be conducted after the emergency inverter has been charged for 1 hour.

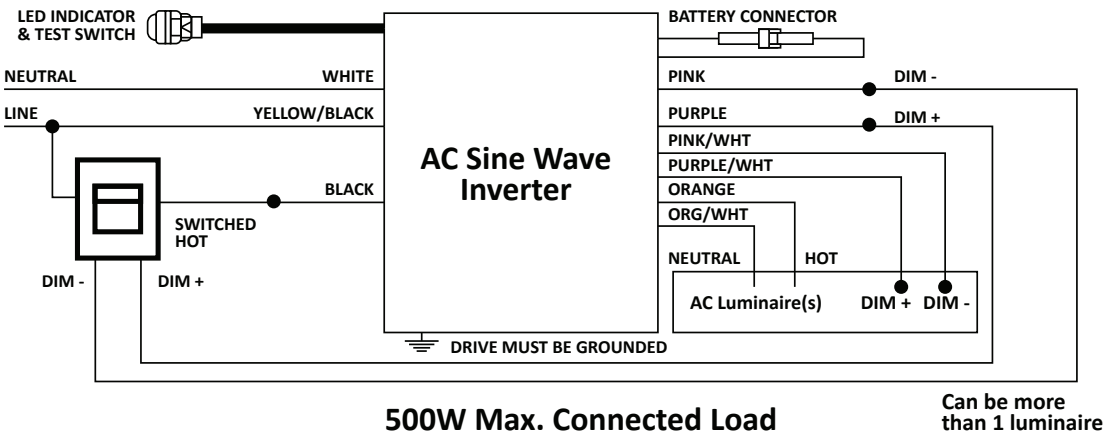

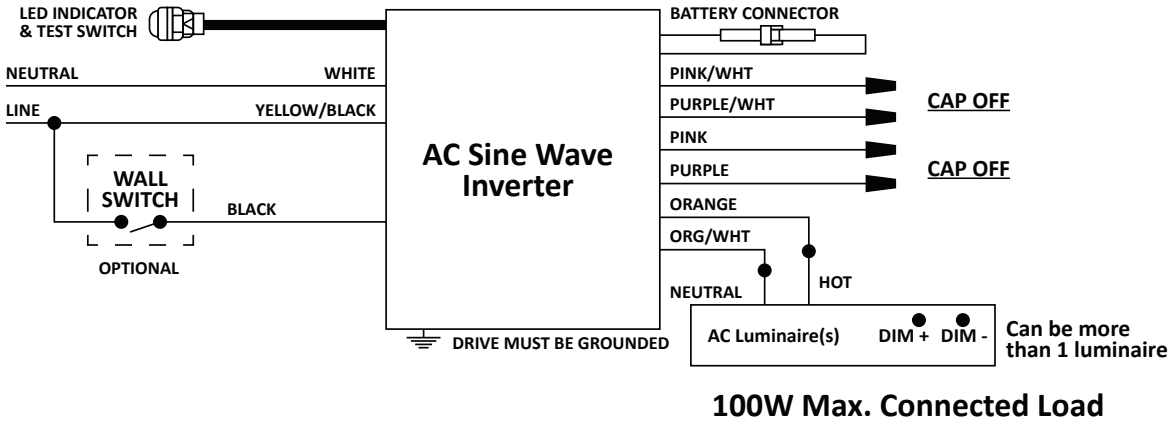

Figure B. Wiring Diagram without 0-10V Dimmer

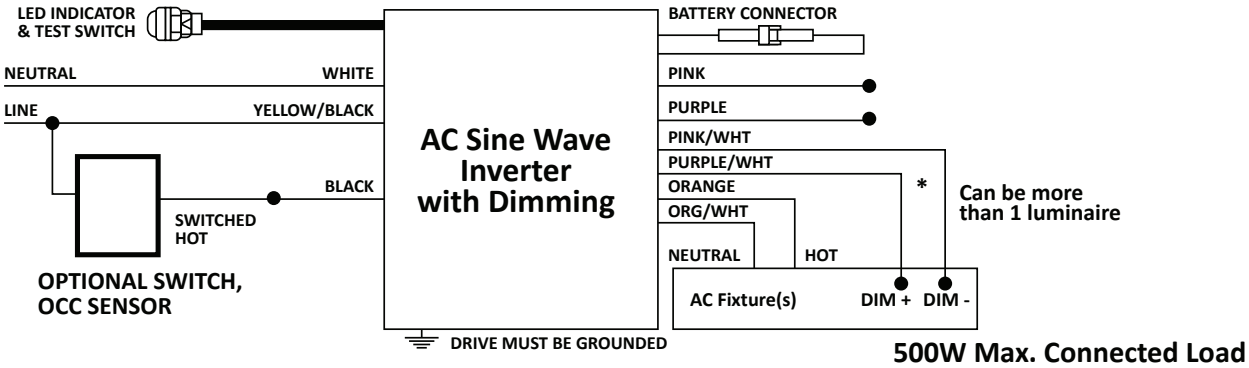

Figure C. Wiring Diagram for High Power loads greater than the inverter power but when no dimmer is used- such as a highbay. Purple /White(+) and Pink/White(-) MUST be connected from micro inverter to the AC driver dim leads with proper polarity. See Table 1 for maximum connected normal power load.