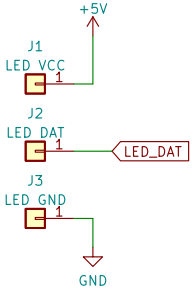


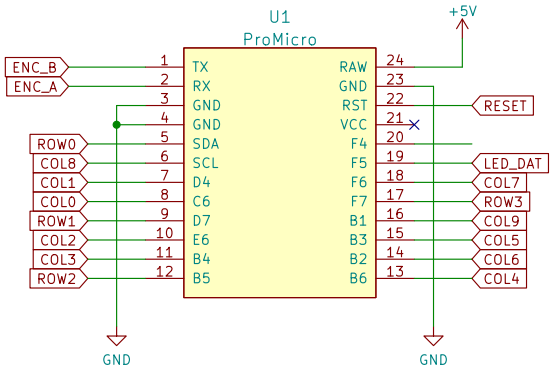


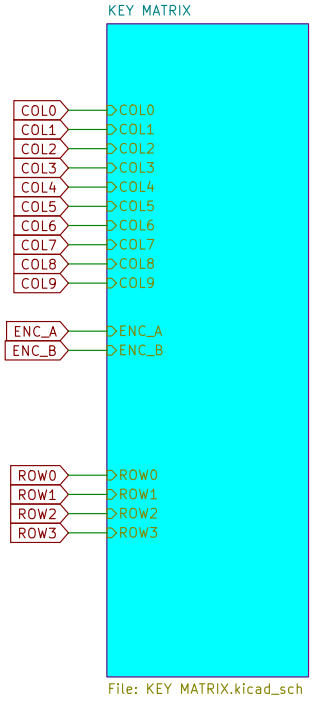


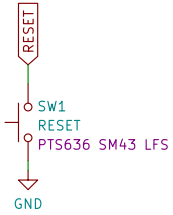


Sheet: /
File: Titan Keyboard.kicad_sch

**Title:**

| Size: A4 | Date: | **Rev:** |
|---|---|---|
| KiCad E.D.A. kicad (6.0.9) | | Id: 1/2 |

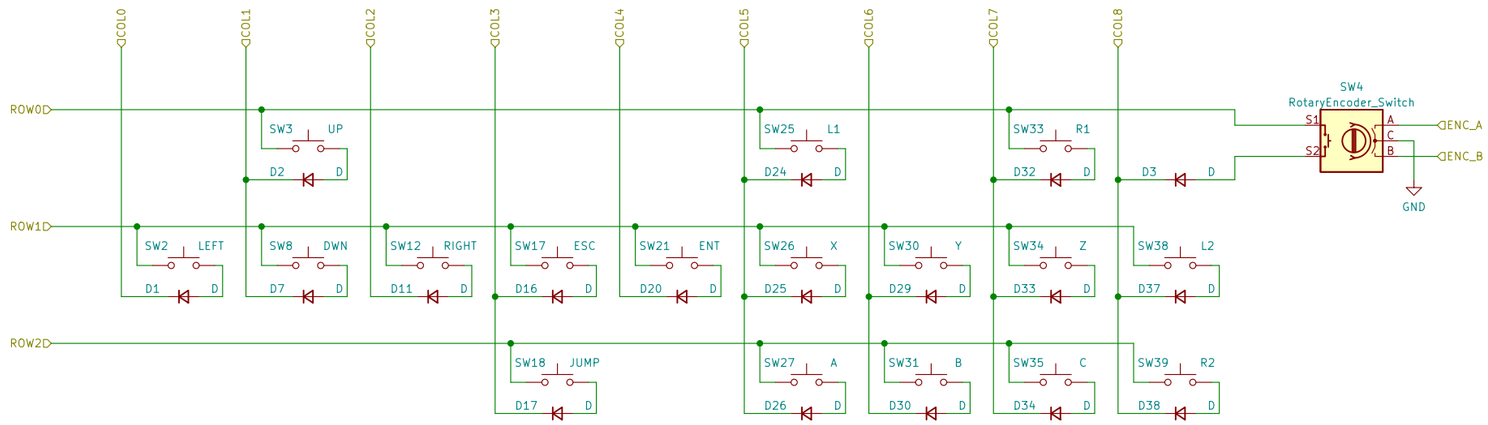


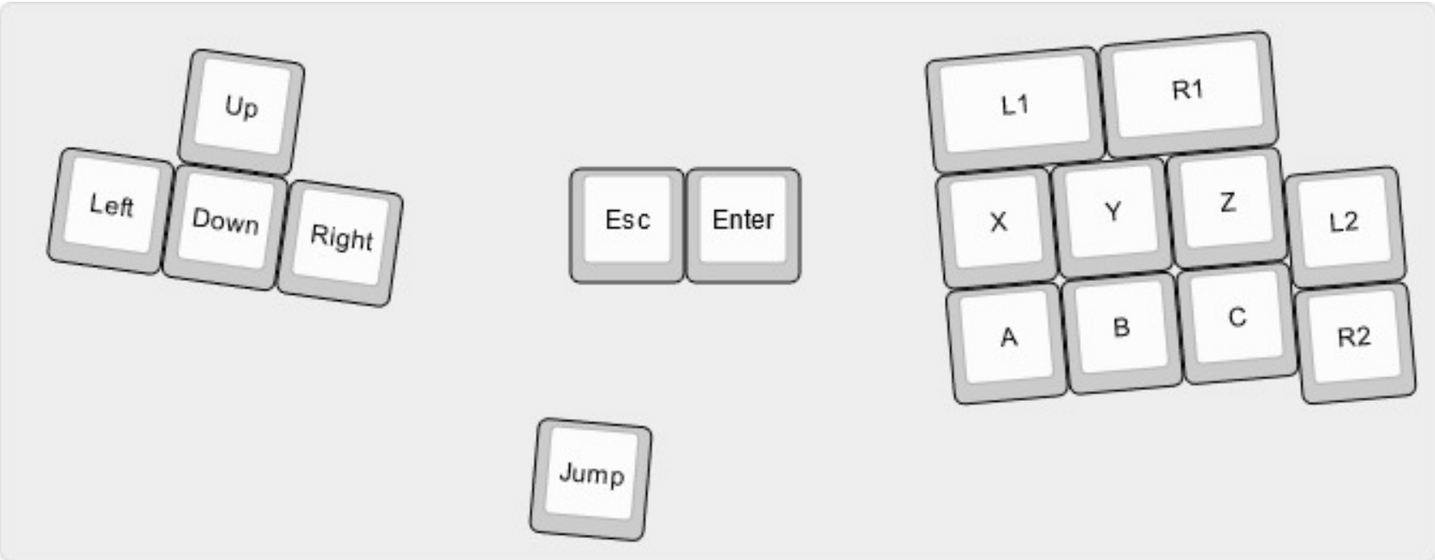


Sheet: /KEY MATRIX/
File: KEY MATRIX.kicad_sch

**Title: 64KEY**

| | | |
|---|---|---|
| Size: A3 | Date: 2022-08-21 | Rev: A |
| KiCad E.D.A. kicad (6.0.9) | | Id: 2/2 |