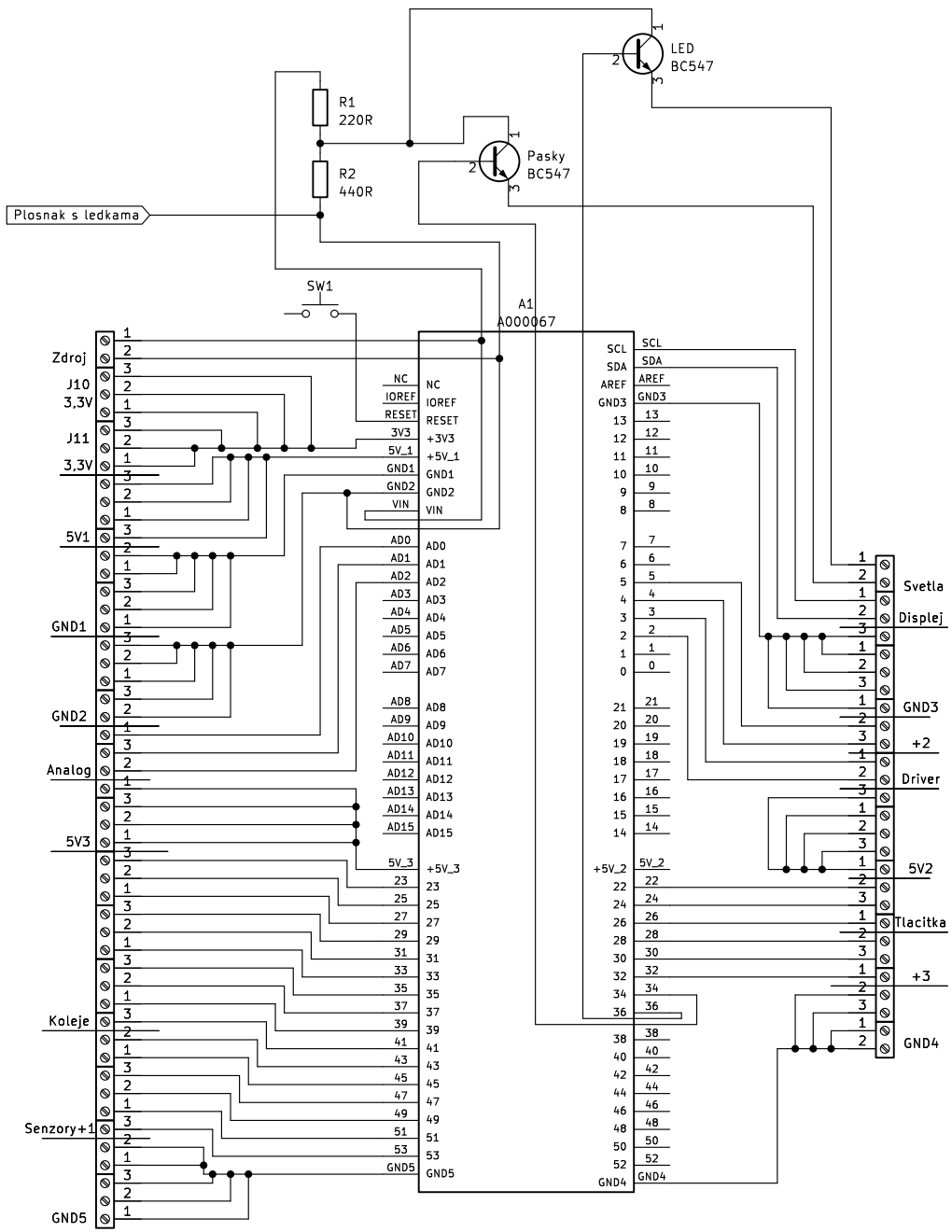

Sheet: /
File: sheild adruino.kicad_sch

Title:

Size: A4	Date:	**Rev:**
KiCad E.D.A. kicad (7.0.0)		Id: 1/1