INTEGRATION
SOFTWARE
ELECTRONIC
ENGINEERING

www.iseebcn.com

IGEPv2 - RC version (2011-March-21)

CONTENTS :

PAGE NO.	SCHEMATIC PAGE
1	COVER PAGE
2	POWER
3	OMAP3 1 OF 3
4	OMAP3 2 OF 3, JTAG, SWITCHES, LEDS, SVIDEO
5	OMAP3 3 OF 3
6	TWL4030 1 of 2, AUDIO JACKS, LED, 26MHZ, 32KHZ
7	TWL4030 2 of 2
8	USB HOST & OTG
9	SD/MMC, SERIAL DEBUG PORT, BB EXP., KEYB EXP.
10	DVI-D & LCD EXP.
11	ETHERNET
12	CAM + ADC
13	COMBO WIFI BLUETOOTH

All this work is published under:

IGEPv2 - RC version by ISEE 2007 S.L. is licensed under a Creative Commons Attribution-NonCommercial-ShareAlike 3.0 Unported License.
Based on a work at www.iseebcn.com.
Permissions beyond the scope of this license may be available at http://www.igep.es.

This schematic is *NOT SUPPORTED*. Only “community” support is allowed via resources at:
* http://labs.igep.es/
* http://www.igep.es/

Wednesday, March 23, 2011

REV	MODIF.	DES.	DATE	VER.	DATE
A	INIT EDIT	AFG	22/05/09	MCT	21/03/11

01 - COVER
IGEPv2-RC
SCALE 1/1
REV. C
SHEET 1/13

This agreement is our property. Reproduction and publication without our written authorization shall expose offender to legal proceedings.

POWER SUPPLY 5V DC

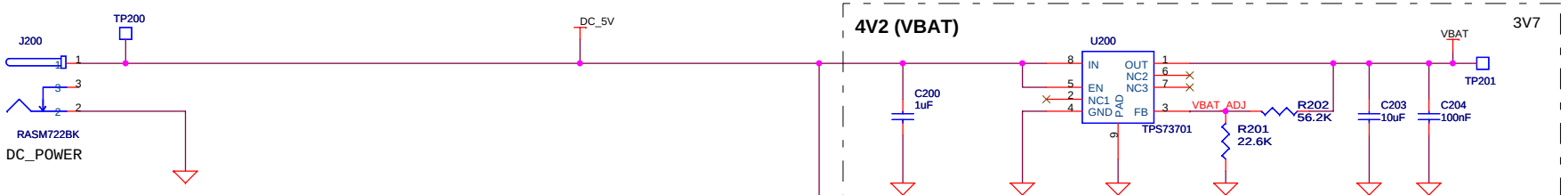

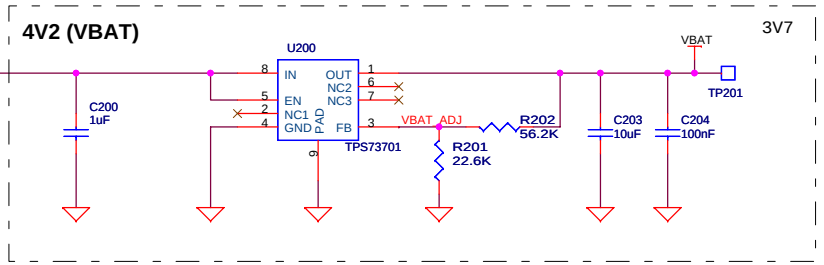

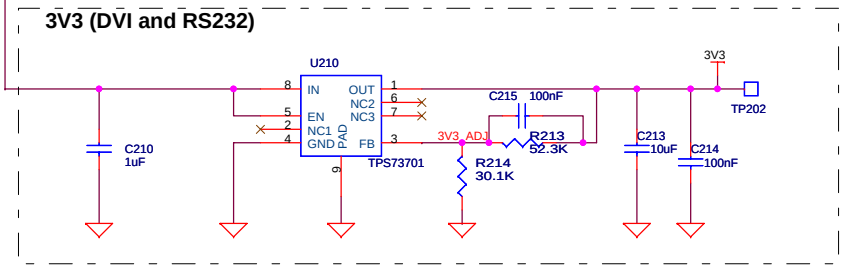

IGEPv2 - RC version by ISEE 2007 S.L. is licensed under a Creative Commons Attribution-NonCommercial-ShareAlike 3.0 Unported License.

Based on a work at www.iseebcn.com.

Permissions beyond the scope of this license may be available at http://www.igep.es.

	R243	R244
IGEPv2 - RB version	10K	Empty
IGEPv2 - RC version	Empty	10K

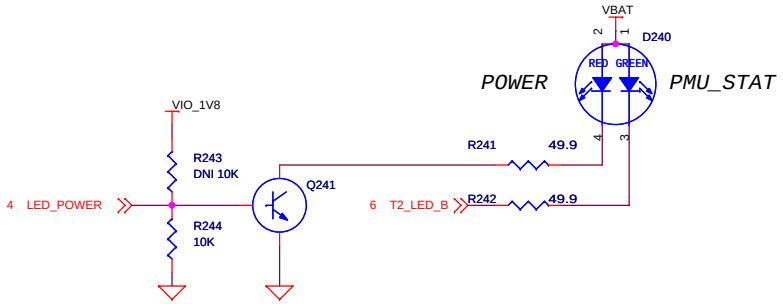

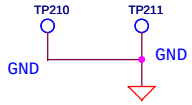

Wednesday, March 23, 2011

REV	MODIF.	DES.	DATE	VER.	DATE
A	INIT EDIT	AFG	22/05/09	MCT	21/03/11

02 - POWER

IGEPv2-RC

SCALE 1/1

REV. C

SHEET 2/13

This agreement is our property. Reproduction and publication without our written authorization shall expose offender to legal proceedings.

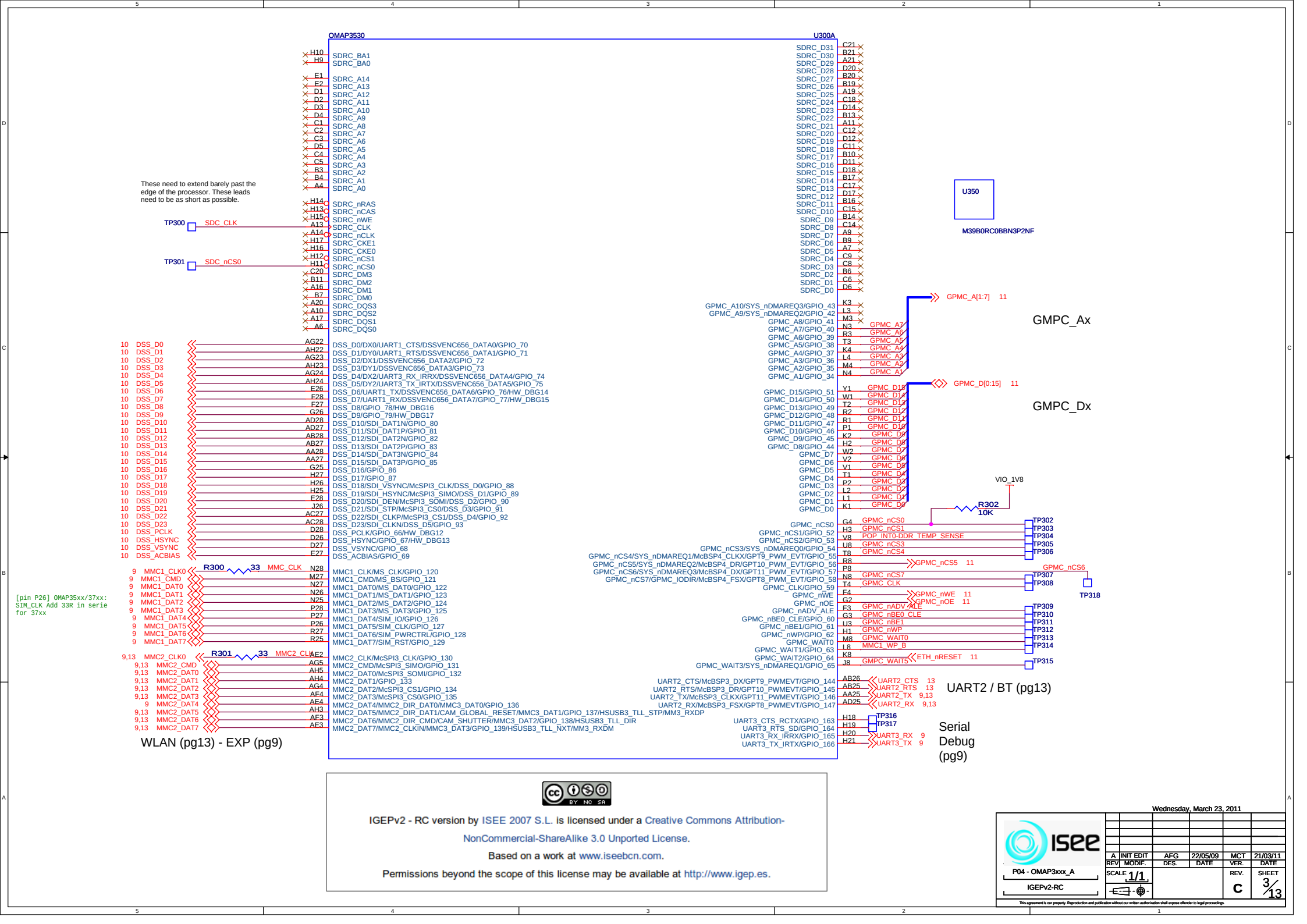

IGEPv2 - RC version by ISEE 2007 S.L. is licensed under a Creative Commons Attribution-NonCommercial-ShareAlike 3.0 Unported License.

Based on a work at www.iseebcn.com.

Permissions beyond the scope of this license may be available at http://www.igep.es.

Wednesday, March 23, 2011

REV	MODIF.	DES.	DATE	VER.	DATE
A	INIT EDIT	AFG	22/05/09	MCT	21/03/11

P04 - OMAP3xxx_A

IGEPv2-RC

SCALE 1/1

REV. C

SHEET 3/13

This agreement is our property. Reproduction and publication without our written authorization shall expose offender to legal proceedings.

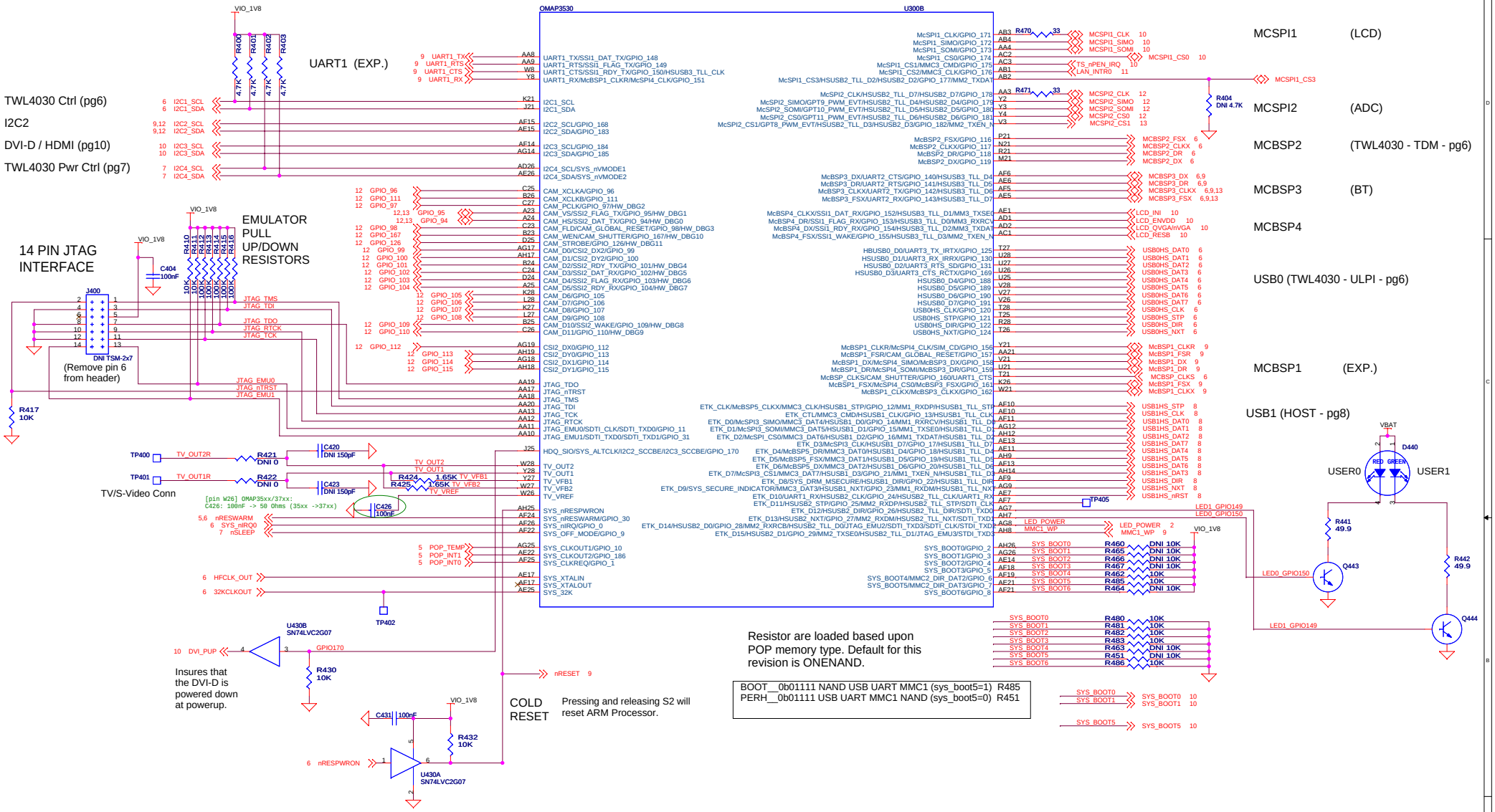

IGEPv2 - RC version by ISEE 2007 S.L. is licensed under a Creative Commons Attribution-NonCommercial-ShareAlike 3.0 Unported License.
Based on a work at www.iseebcn.com.
Permissions beyond the scope of this license may be available at http://www.igep.es.

Wednesday, March 23, 2011

A	INIT EDIT	AFG	22/05/09	MCT 21/03/11
REV.	MODIF.	DES.	DATE	VER. DATE

P04 - OMAP3xxx_B
IGEPv2-RC
SCALE 1/1
REV. C
SHEET 4/13

This agreement is our property. Reproduction and publication without our written authorization shall expose offender to legal proceedings.

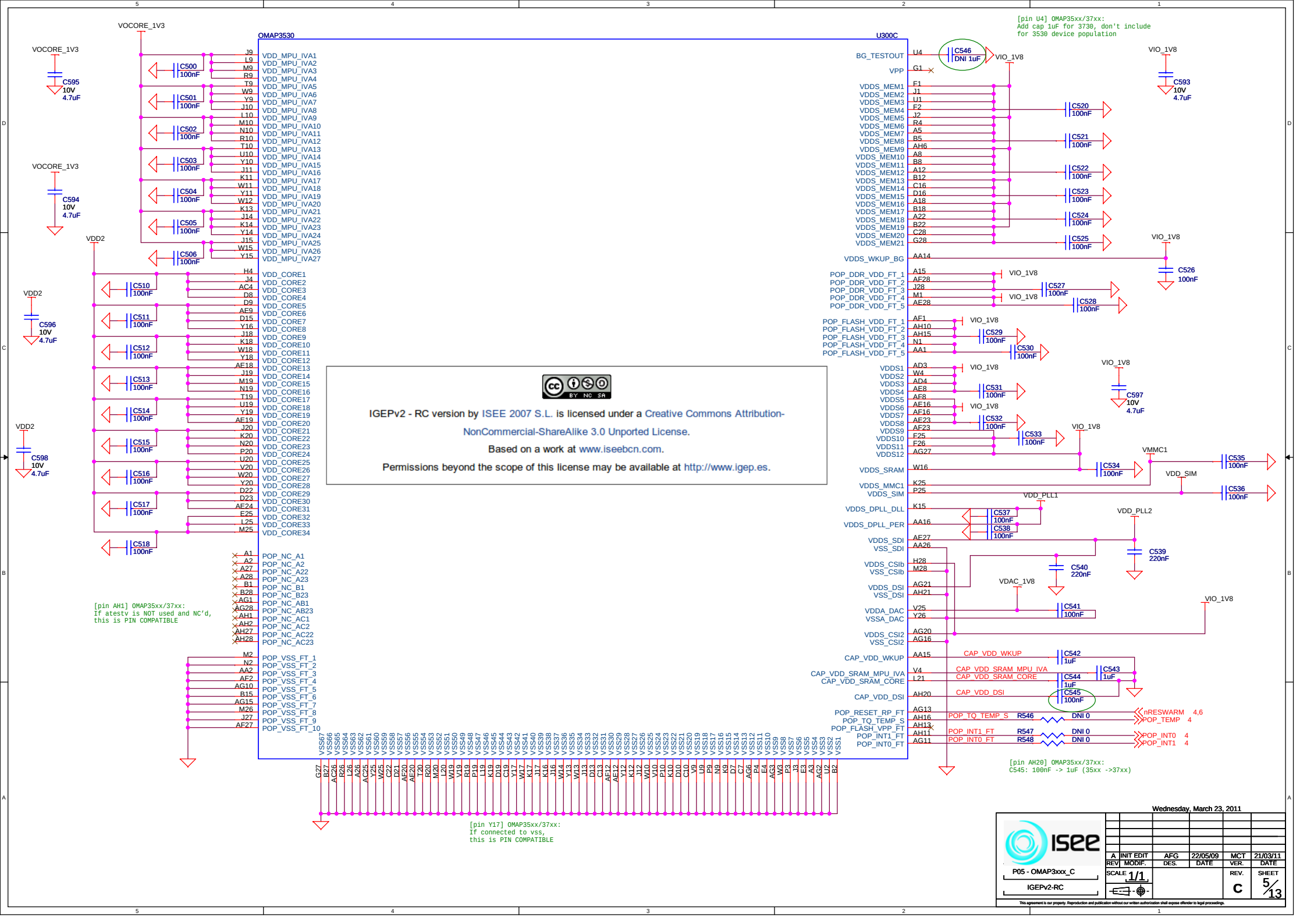
OMAP3530
U300C
VOCORE_1V3
VDD2
VIO_1V8
VDAC_1V8
VDD_PLL1
VDD_PLL2
VMMC1
VDD_SIM
[pin U4] OMAP35xx/37xx:
Add cap 1uF for 3730, don't include
for 3530 device population
[pin AH1] OMAP35xx/37xx:
If atestv is NOT used and NC'd,
this is PIN COMPATIBLE
[pin Y17] OMAP35xx/37xx:
If connected to vss,
this is PIN COMPATIBLE
[pin AH20] OMAP35xx/37xx:
C545: 100nF -> 1uF (35xx ->37xx)
IGEPv2 - RC version by ISEE 2007 S.L. is licensed under a Creative Commons Attribution-NonCommercial-ShareAlike 3.0 Unported License.
Based on a work at www.iseebcn.com.
Permissions beyond the scope of this license may be available at http://www.igep.es.
Wednesday, March 23, 2011
P05 - OMAP3xxx_C
IGEPv2-RC
SCALE 1/1
REV. C
SHEET 5/13
This agreement is our property. Reproduction and publication without our written authorization shall expose offender to legal proceedings.

IGEPv2 - RC version by ISEE 2007 S.L. is licensed under a Creative Commons Attribution-NonCommercial-ShareAlike 3.0 Unported License.
Based on a work at www.iseebcn.com.
Permissions beyond the scope of this license may be available at http://www.igep.es.

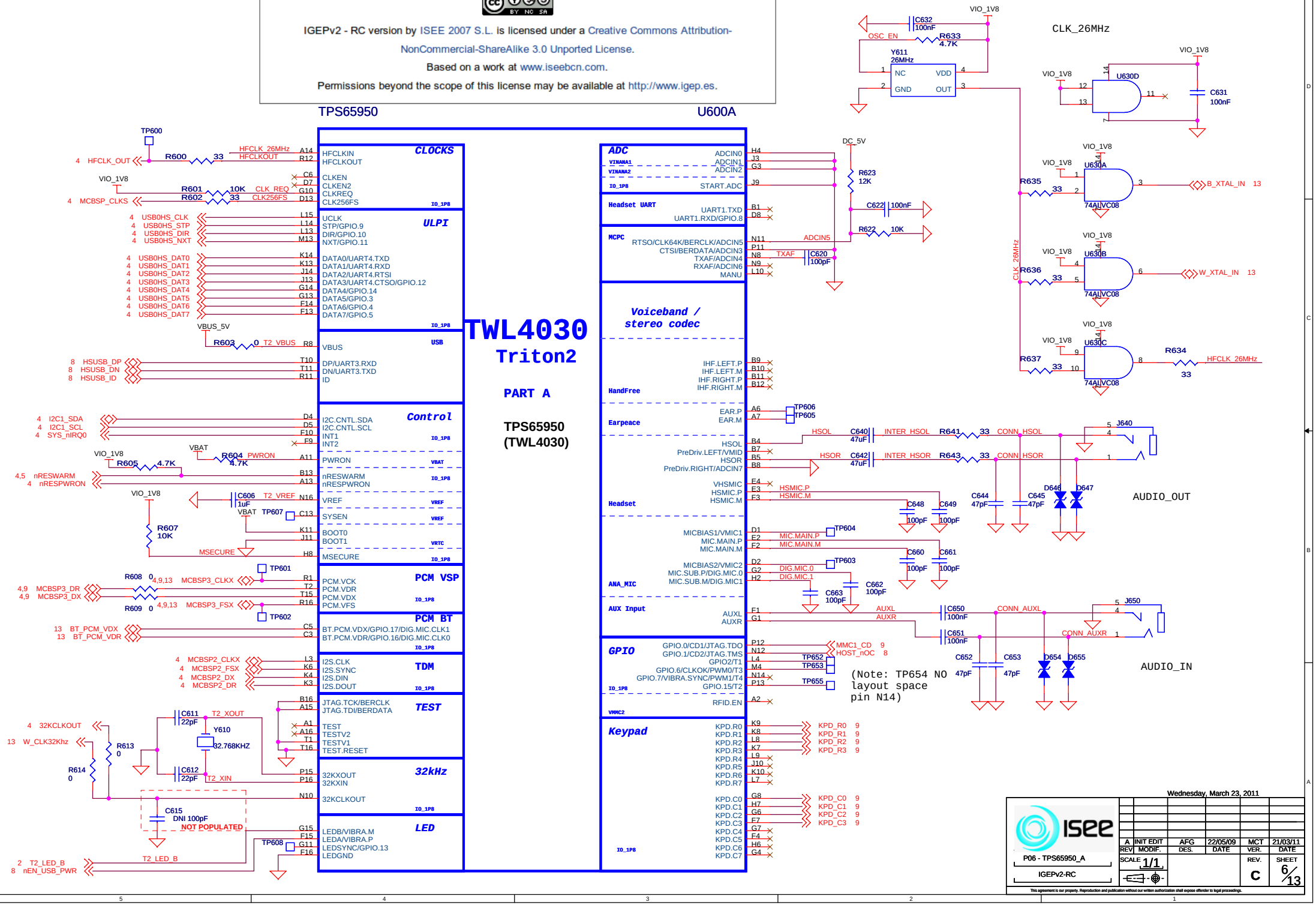

TWL4030
Triton2

Part B
Power

TPS65950
(TWL4030)

Domain	Type	Voltage	Current
External			
VDD1	SMPS	0.6V to 1.45V	1100mA
VDD2	SMPS	0.6V to 1.45V/1.5V	600mA
VIO	SMPS	1.8V /1.85V	600mA
VBUS	CP	4.8V	100mA
VAUX1	LDO	2.5V/2.8V/3.0V	200mA
VAUX2	LDO	1.0V/1.2V/1.5V/1.8V/2.5V/2.8V	100mA
VAUX3	LDO	1.5V/1.8V/2.5V/2.8V	200mA
VAUX4	LDO	0.7V/1.0V/1.2V/1.5V/1.8V/2.5V/2.8V	100mA
VMMC1	LDO	1.85V/2.85V/3.0V/3.15V	220mA
VMMC2	LDO	1.85V/2.6V/2.85V/3.0V/3.15V	100mA
VMIC1	LDO	1.8V	10mA
VMIC2	LDO	1.8V	10mA
VSIM	LDO	1.8V/2.8V/3.0V	50mA
VDAC	LDO	1.2V/1.3V/1.8V	65mA
VPLL1	LDO	1.0V/1.2V/1.3V/1.8V	40mA
VPLL2	LDO	0.7V/1.0V/1.2V/1.3V/1.8V	60mA
Internal			
VUSB	LDO	3.1V	15mA
VUSB_1P5	LDO	1.5V	30mA
VUSB_1P8	LDO	1.8V	30mA
VINTDIG	LDO	1.5V	50mA
VINANA1	LDO	1.5V	50mA
VINANA2	LDO	2.5V/2.75V	250mA
VRTC	LDO	1.5V	

IGEPv2 - RC version by ISEE 2007 S.L. is licensed under a Creative Commons Attribution-NonCommercial-ShareAlike 3.0 Unported License.
Based on a work at www.iseebcn.com.
Permissions beyond the scope of this license may be available at http://www.igep.es.

Wednesday, March 23, 2011

REV	MODIF.	DES.	DATE	VER.	DATE
A	INIT EDIT	AFG	22/05/09	MCT	21/03/11

P07 - TPS65950_B
IGEPv2-RC
SCALE 1/1
REV. C
SHEET 7/13

This agreement is our property. Reproduction and publication without our written authorization shall expose offender to legal proceedings.

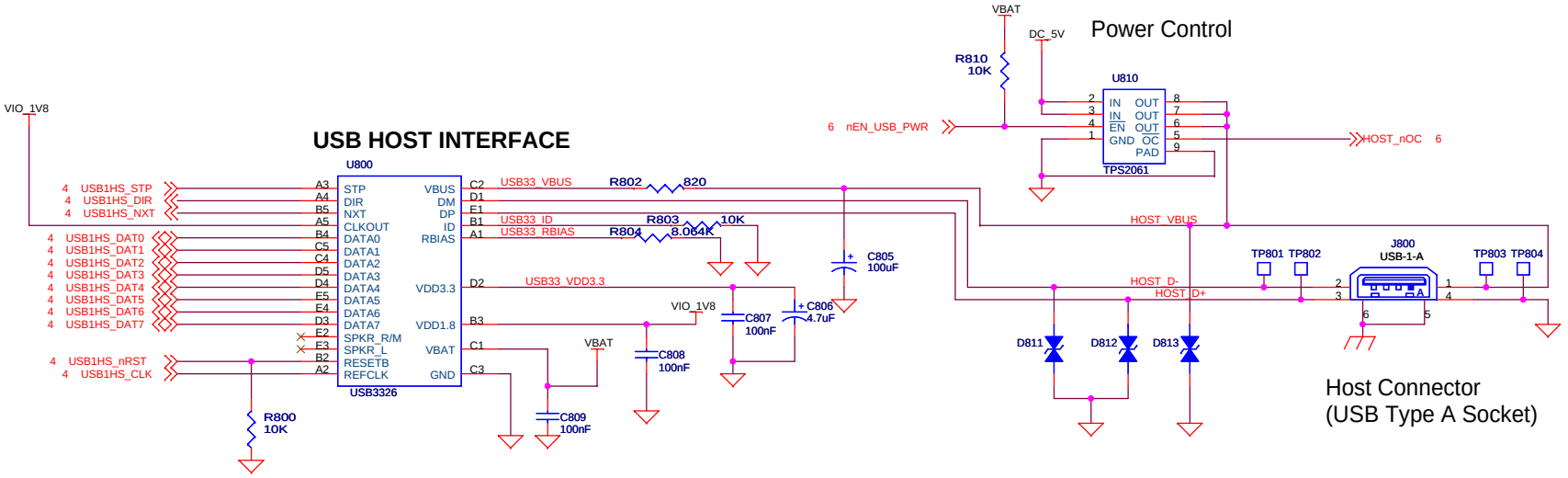

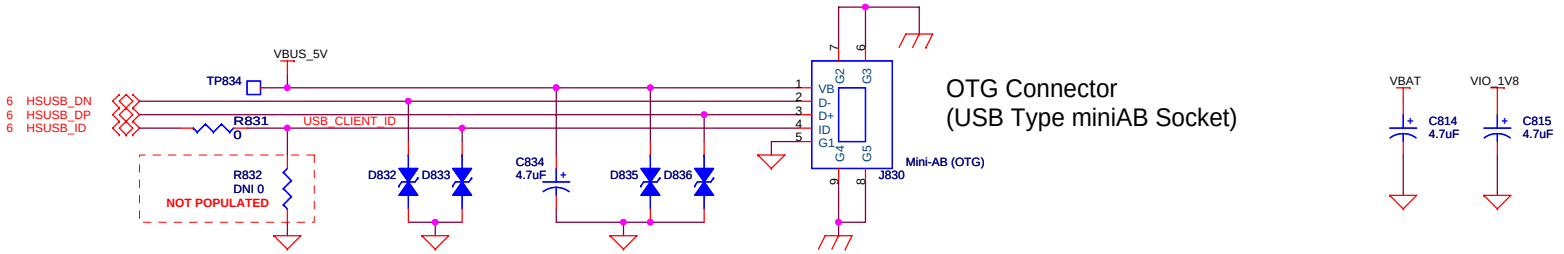

IGEPv2 - RC version by ISEE 2007 S.L. is licensed under a Creative Commons Attribution-NonCommercial-ShareAlike 3.0 Unported License.
Based on a work at www.iseebcn.com.
Permissions beyond the scope of this license may be available at http://www.igep.es.

Wednesday, March 23, 2011

REV	MODIF.	DES.	DATE	VER.	DATE
A	INIT EDIT	AFG	22/05/09	MCT	21/03/11

P08 - USB HOST and OTG

IGEPv2-RC

SCALE 1/1

REV. C

SHEET 8/13

This agreement is our property. Reproduction and publication without our written authorization shall expose offender to legal proceedings.

microSD

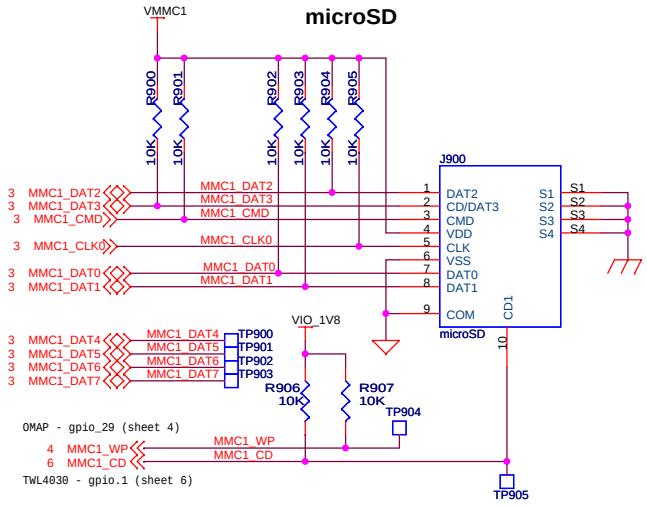

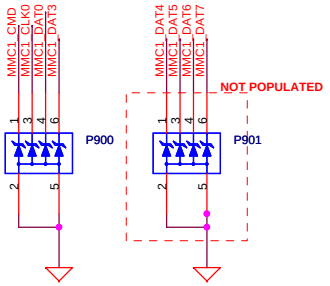

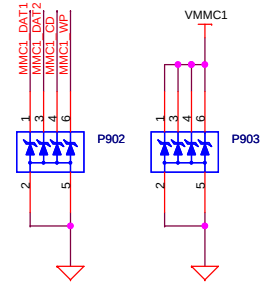

Expansion Connectors

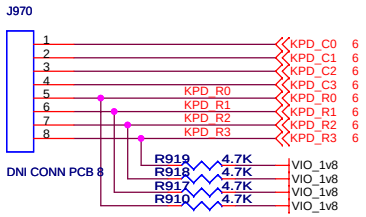

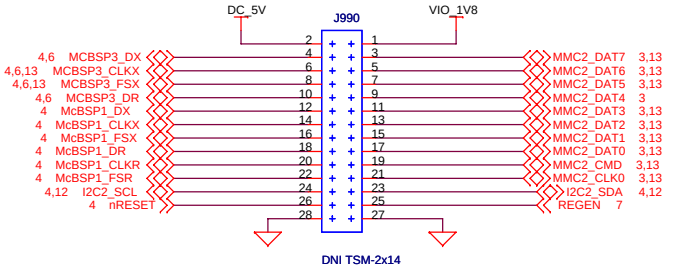

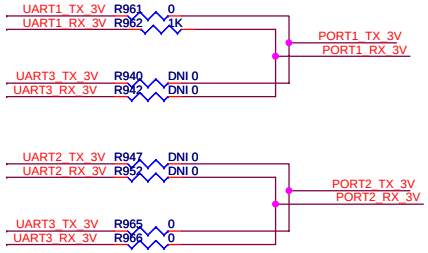

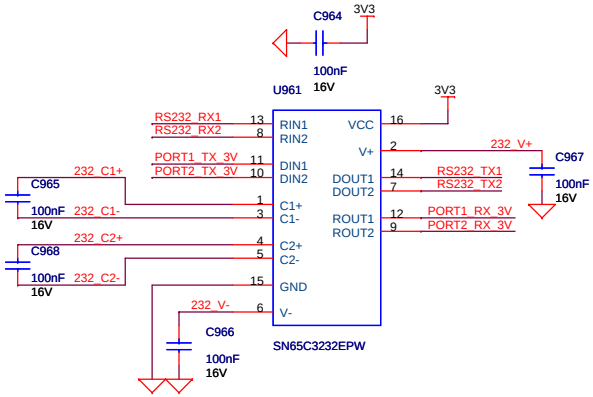

UART1 Serial Port

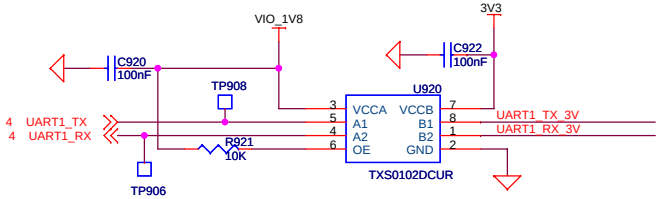

SERIAL DEBUG PORT
UART3 Serial Port

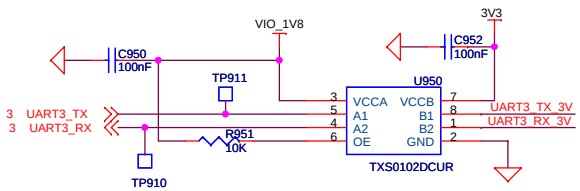

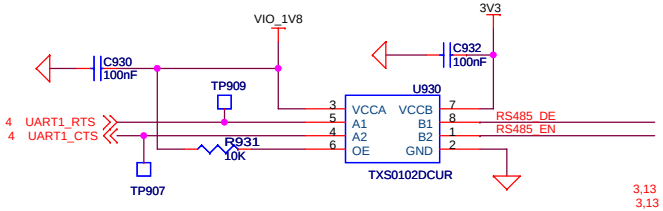

UART2 Serial Port

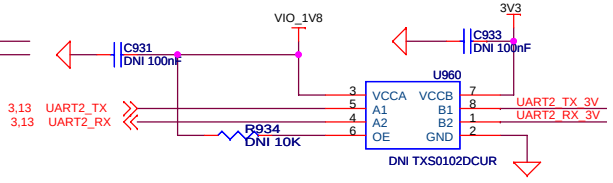

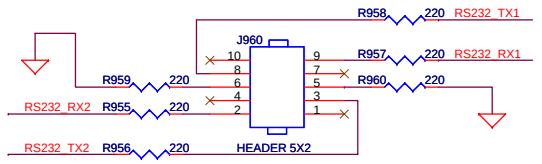

RS485 INTERFACE

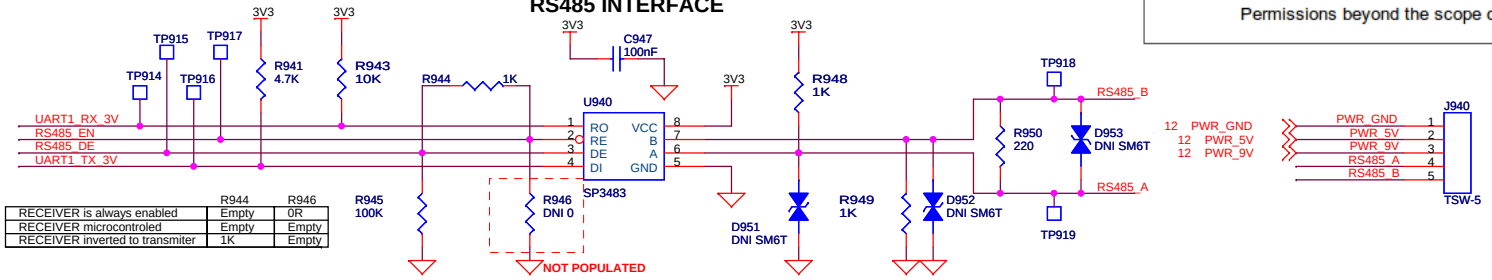

	R944	R946
RECEIVER is always enabled	Empty	0R
RECEIVER microcontroled	Empty	Empty
RECEIVER inverted to transmiter	1K	Empty

IGEPv2 - RC version by ISEE 2007 S.L. is licensed under a Creative Commons Attribution-NonCommercial-ShareAlike 3.0 Unported License.

Based on a work at www.iseebcn.com.

Permissions beyond the scope of this license may be available at http://www.igep.es.

<variant_name>

Wednesday, March 23, 2011

REV	MODIF.	DES.	DATE	VER.	DATE
A	INIT EDIT	AFG	22/05/09	MCT	21/03/11

P09 - MMC - SERIAL - EXP

IGEPv2-RC

SCALE 1/1

REV. C

SHEET 9/13

This agreement is our property. Reproduction and publication without our written authorization shall expose offender to legal proceedings.

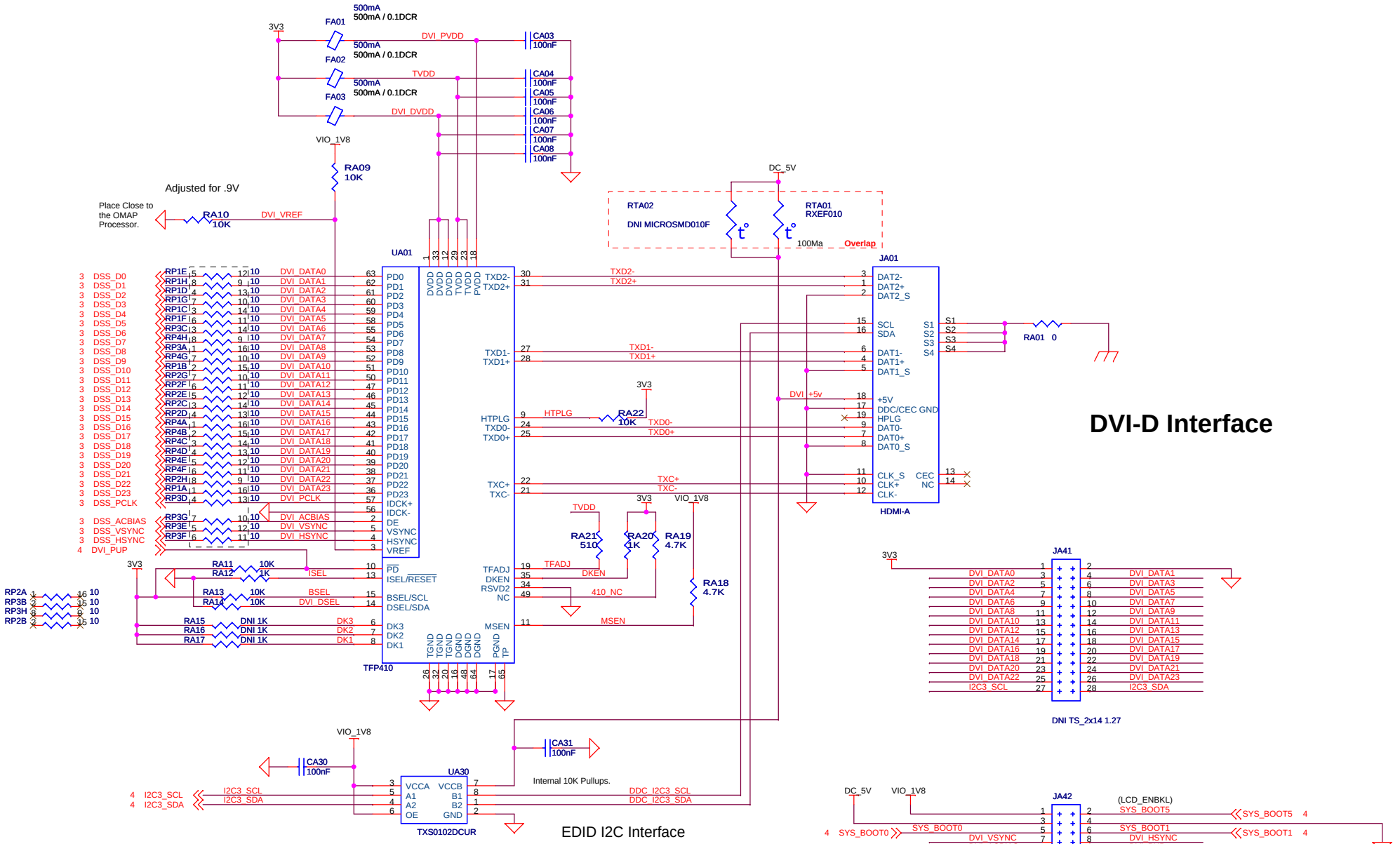

IGEPv2 - RC version by ISEE 2007 S.L. is licensed under a Creative Commons Attribution-NonCommercial-ShareAlike 3.0 Unported License.

Based on a work at www.iseebcn.com.

Permissions beyond the scope of this license may be available at http://www.igep.es.

<Variant Name>

Wednesday, March 23, 2011

REV	MODIF.	DES.	DATE	VER.	DATE
A	INIT EDIT	AFG	22/05/09	MCT	21/03/11

P10 - DVI-D / HDMI

IGEPv2-RC

SCALE 1/1

REV. C

SHEET 10/13

This agreement is our property. Reproduction and publication without our written authorization shall expose offender to legal proceedings.

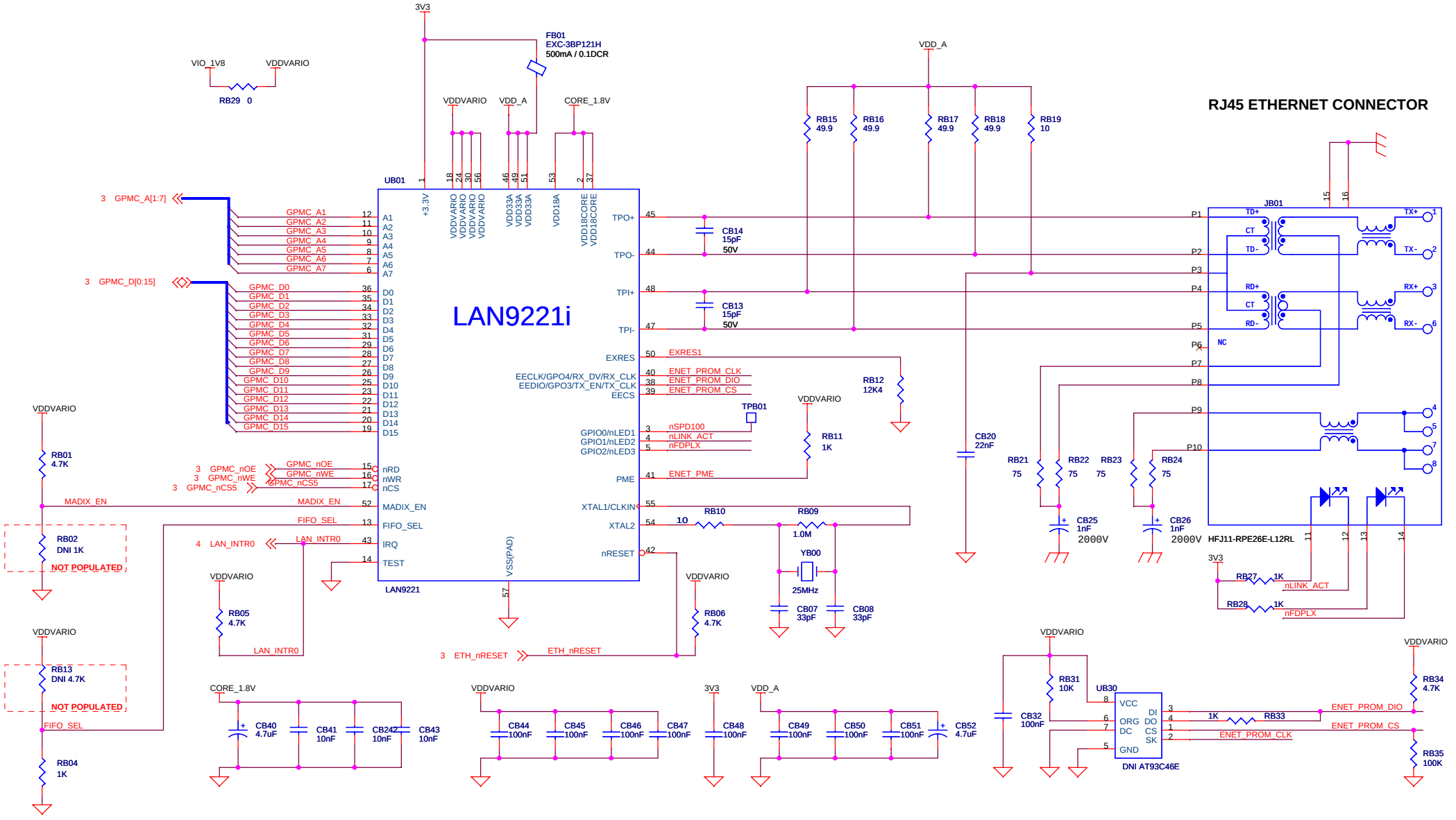

IGEPv2 - RC version by ISEE 2007 S.L. is licensed under a Creative Commons Attribution-NonCommercial-ShareAlike 3.0 Unported License.

Based on a work at www.iseebcn.com.

Permissions beyond the scope of this license may be available at http://www.igep.es.

Wednesday, March 23, 2011

REV	MODIF.	DES.	DATE	VER.	DATE
A	INIT EDIT	AFG	22/05/09	MCT	21/03/11

P11 - ETHERNET

IGEPv2-RC

SCALE 1/1

REV. C

SHEET 11/13

This agreement is our property. Reproduction and publication without our written authorization shall expose offender to legal proceedings.

POWER

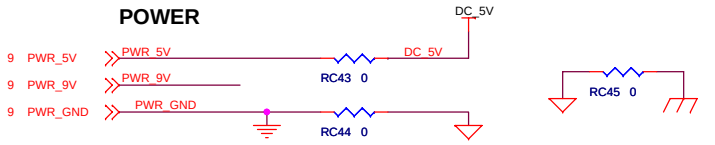

CAM CONNECTOR

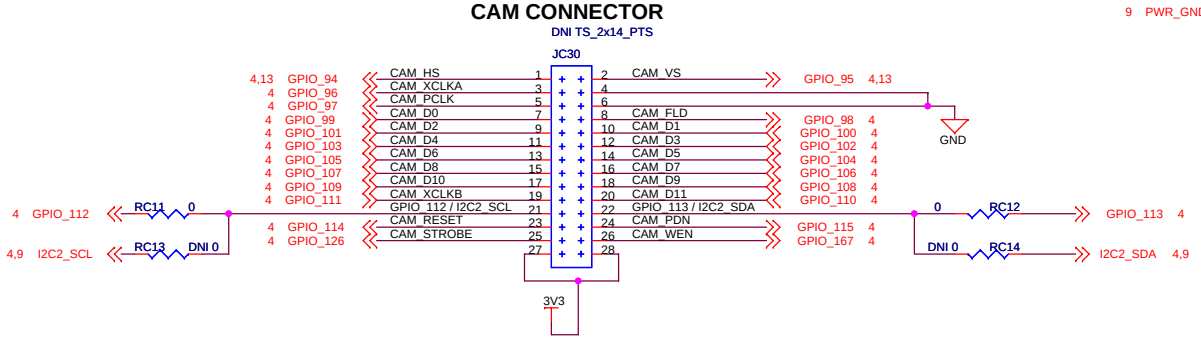

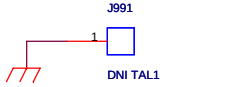

ADC (SPI) 3MSps [CMOS 1V8]

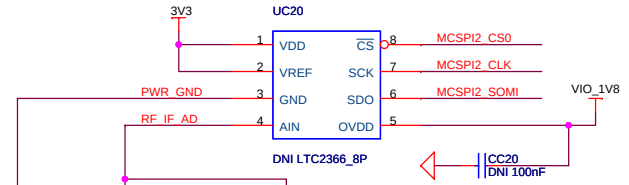

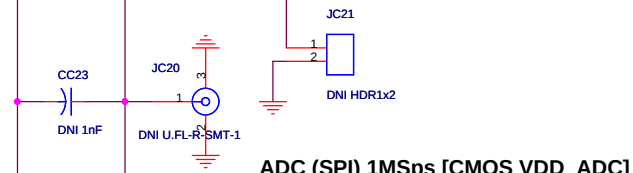

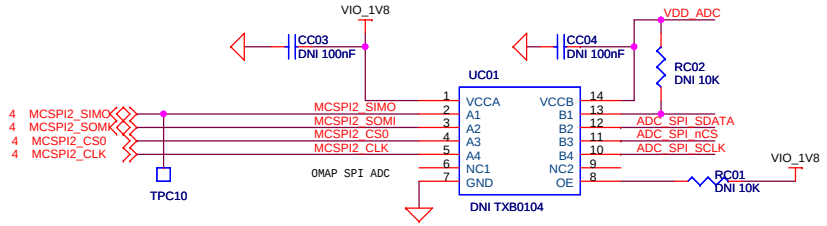

ADC (SPI) 1MSps [CMOS VDD_ADC]

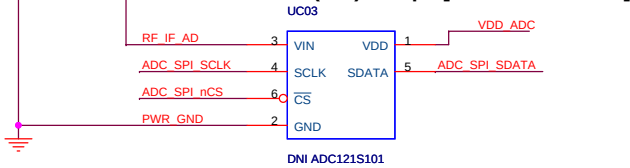

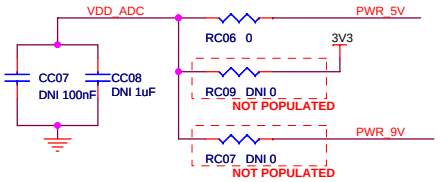

IGEPv2 - RC version by ISEE 2007 S.L. is licensed under a Creative Commons Attribution-NonCommercial-ShareAlike 3.0 Unported License.

Based on a work at www.iseebcn.com.

Permissions beyond the scope of this license may be available at http://www.igep.es.

Wednesday, March 23, 2011

REV	MODIF.	DES.	DATE	VER.	DATE
A	INIT EDIT	AFG	22/05/09	MCT	21/03/11

P12 - ADC_CAM

IGEPv2-RC

SCALE 1/1

REV. C

SHEET 12/13

This agreement is our property. Reproduction and publication without our written authorization shall expose offender to legal proceedings.

WIFI-BLUETOOTH

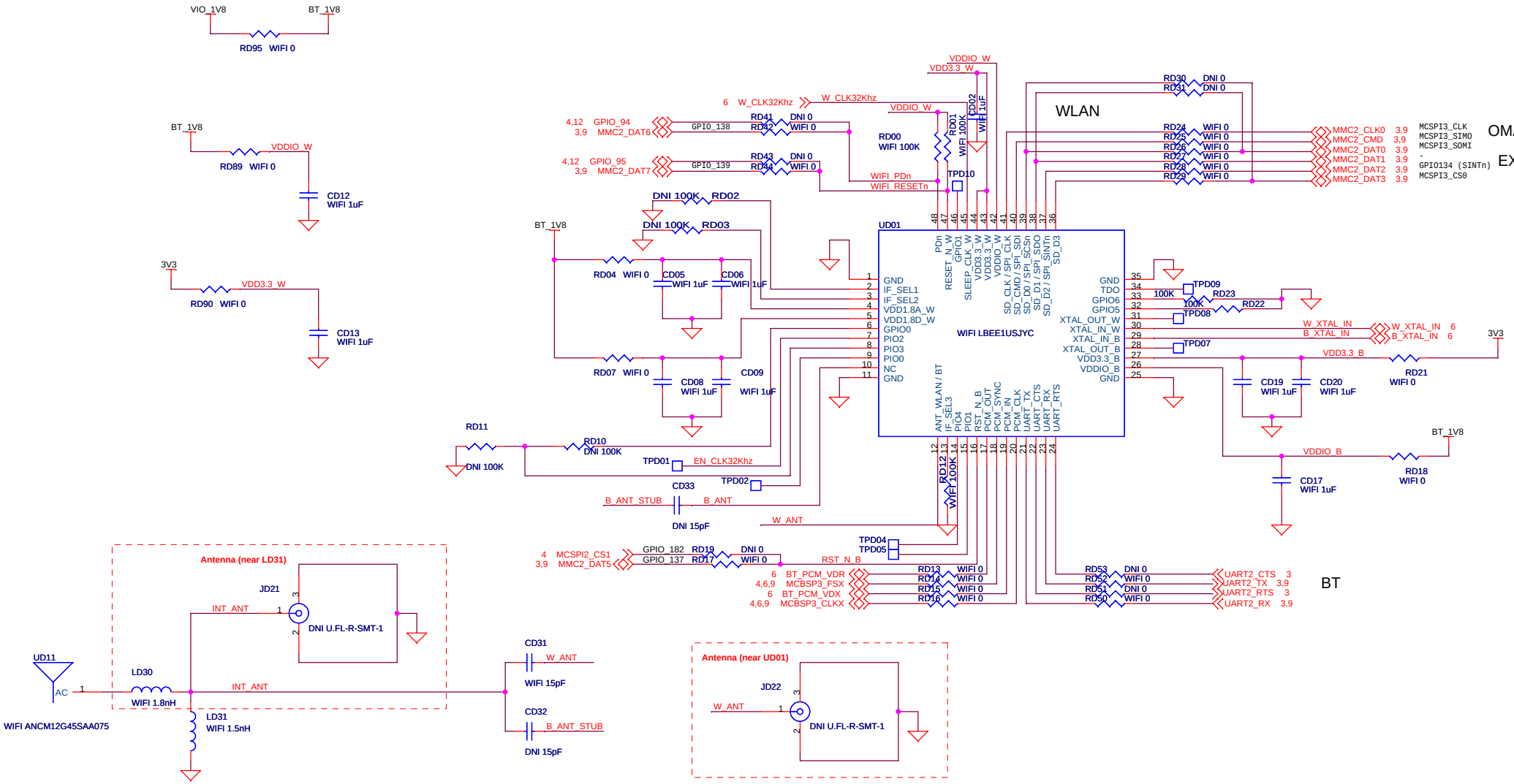

IGEPv2 - RC version by ISEE 2007 S.L. is licensed under a Creative Commons Attribution-NonCommercial-ShareAlike 3.0 Unported License.

Based on a work at www.iseebcn.com.

Permissions beyond the scope of this license may be available at http://www.igep.es.

Wednesday, March 23, 2011

REV	MODIF.	DES.	DATE	VER.	DATE
A	INIT EDIT	AFG	22/05/09	MCT	21/03/11

P13 - WIFI BLUETOOTH

IGEPv2-RC

SCALE 1/1

REV. C

SHEET 13/13

This agreement is our property. Reproduction and publication without our written authorization shall expose offender to legal proceedings.