Intelligent Disinfection Robot with High-Touch Surface Detection and Dynamic Pedestrian Avoidance

Muhang He[1], Yunfei Luan[1], Yudong Tian[2], Chengjie Lin[2], Yunhan Fang[2], Zihao Zhao[2], Jianxin Yang, Yao Guo*

***Abstract*— The increasing awareness of public health issues has highlighted the need for effective disinfection of crowded indoor public areas, leading to the development of automated disinfection robots. However, most of the existing robots spray disinfectant in all areas, and they are still immature to navigate in crowded yet dynamic environments. Hence, in this paper, we design a new disinfection robotic system, which consists of a mobile platform, an RGB-D camera, and a robotic arm with a spray disinfection device. To address the above challenges, we first propose a vision-based method for accurately detecting high-touch areas in the surroundings, enabling the disinfection robot to achieve superior disinfection efficiency. In addition, we propose a dynamic pedestrian avoidance method, namely Socially Aware APF (SA-APF), which can predict the movement trend of pedestrians and plan the path in real-time. Both simulated and real-world experiments are conducted to demonstrate the effectiveness of our disinfection robot system, especially highlighting the ability to detect high-touch areas and navigate in the environment while avoiding dynamic pedestrians.**

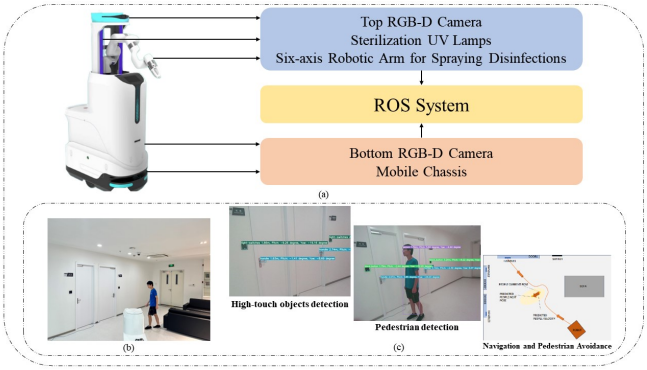

Fig. 1. Overview of the disinfection robot system, (a) overall composition of the system, (b) robot system in a real scenario, (c) illustration of the function modules.

I. Introduction

The emergence of the COVID-19 pandemic and the increase in public health awareness have made effective disinfection of crowded places an urgent requirement for preventing the outbreak of infectious diseases. Indoor public areas, such as hospitals, hotels, and community centers, are at high risk of viral infections due to the large flow of people and the difficulty of ventilation. Despite the high time cost and low efficiency of traditional manual disinfection, it is still commonly used [1]. However, the potential exposure and infection can easily harm the health of the human staff. Hence, the development of automated disinfection robots has gained increasing popularity [2], becoming crucial components of hospital automation robots.

In recent years, various disinfection robots have been developed and manufactured [3]–[5], demonstrating superior disinfection efficiency thanks to the high automation level of robots. However, it is worth pointing out that most existing disinfection robots mainly perform spraying disinfectant in all areas, which is wasteful and inefficient. Additionally, in terms of navigation, these robots treat high-density pedestrians in the surroundings as static obstacles, overlooking the complicated mobility of human beings. Therefore, this paper proposes a vision-based autonomous disinfection robot that is able to intelligently select high-touch disinfection areas and ensure dynamic avoidance of pedestrians in complex indoor environments. Such a design aims to enhance the efficiency of disinfection in indoor scenarios and minimize the risk of virus transmission and spread.

On one hand, it is essential to ensure that various algorithms (e.g., object detection and indoor navigation) can be performed in real time for a disinfection robot. For object detection, state-of-the-art algorithms such as Faster R-CNN [6] and Mask R-CNN [7] may achieve better detection accuracy, but they are with high computational complexity. Hence, we utilized the YOLO algorithm [8] as the backbone network for object detection, which can be well deployed on the embedded platform with the TensorRT engine. In practice, such an algorithm can achieve multi-target detection in real-time while maintaining satisfactory accuracy. On the other hand, there have been many algorithms in terms of robot path planning and obstacle avoidance, which can be mainly divided into sampling-based and Artificial Potential Field (APF) based methods. As for sampling-based methods, the planning framework is mainly based on Rapidly-exploring Random Trees (RRT) or Dynamic Window Approach (DWA) [9], [10]. These algorithms introduce socially-aware cost optimization functions by taking the mobility of people into account. Although these approaches enhance comfort, naturalness and sociability [11] of the robot, the crowded pedestrians and highly dynamic scene are not fully considered in their simulation environment. Therefore, these approaches still need improvement in crowded and

This work was supported by the Science and Technology Commission of Shanghai Municipality under Grant 20DZ2220400.

M.He, Y.Luan, Y.Tian, C.Lin, and Y.Fang, J. Yang, and Y. Guo are with the School of Biomedical Engineering

Z.Zhao is with the School of Electronic Information and Electrical Engineering.

highly dynamic indoor environments, such as hospitals. As for APF-based methods [12], they also suffer from certain limitations: trap situations due to local minima; no passage between closely spaced obstacles; oscillations in the presence of obstacles; oscillations in narrow passages. Accordingly, considerable effort has been gained to devise strategies that address these challenges [13]–[15]. By combining the strengths of APF with complementary techniques, it is possible to enhance the robustness and efficacy of the method for complex and dynamic environments.

To address the aforementioned challenges, we aim to design an autonomous disinfection robot that is able to navigate in complex indoor environments and especially focus on the disinfection of those high-touch areas. As shown in Fig. 1, our system is built on a mobile platform with differential wheels, equipped with a 2D LiDAR and an RGB-D camera. In terms of functions, the robot is made up of four modules: visual recognition, navigation, robot control, and sterilization. These modules can interact with each other via the Robot Operation System (ROS). Specifically, the vision recognition module is built upon a modified YOLO algorithm, which aims to accurately detect the high-touch objects (e.g., doorknobs and switches in indoor environments) from the embedded RGB-D camera in real time. By fusing the depth information, the relative positions and orientations between the robot and the target can be derived. In addition, the vision recognition module is capable of recognizing pedestrians in the surroundings, providing spatial information relative to the robot. By utilizing a dynamic avoidance algorithm, the robot can maintain a safe distance from these individuals. The navigation module is designed in collaboration with three algorithms, i.e., Simultaneous Localization And Mapping (SLAM), RRT, and Socially Aware APF (SA-APF). With a 2D LiDAR, SLAM is used to build maps of the indoor environment, as well as re-localize the robot during navigation. RRT serves as a global planner to design a smooth path from the start point to the target disinfection point, avoiding static obstacles such as walls and tables simultaneously. In addition, we propose a SA-APF as the local planner. Unlike the traditional APF which treats pedestrians as static obstacles and their repulsion forces given to robot are only up to their current positions, our proposed SA-APF planner can predict the area that people are highly likely to pass by in a few seconds, and then gives the robot repulsive forces according to the prediction. As a result, our algorithm can help the robot to avoid pedestrians more flexibly, especially in hospitals, where the environment is rather crowded, and the walking velocities among pedestrians vary a lot. The robot control module generates the command for enabling the movement of differential wheels, and the sterilization module performs spray disinfection after the robot arrives at the target point. In summary, the main contribution of this paper is threefold:

- We design an automated disinfection robot system, which has high disinfection efficiency and robust navigation skills, and thus is more suitable for crowded scenarios with high disinfection needs such as hospitals.
- A dedicated deep model for key area detection is introduced to detect the target objects with high disinfection needs (such as door handles and switches);
- Deep learning-based pedestrian detection and dynamic pedestrian avoidance are combined to predict the movement trend of pedestrians, so as to achieve real-time path planning and dynamic avoidance of pedestrians and other obstacles.

II. System Overview

A. Hardware Systems

The disinfection robot is built upon a mobile platform consisting of differential drive wheels, with an overall volume of 850*400*1130mm. It comprises a six-degree-of-freedom robotic arm, furnished with a dual-liquid disinfection setup, alongside four more UV disinfection lamps, RGBD camera, and LiDAR detectors. The rear of the robot features wireless charging modules and the front of the robot has a touchscreen.

B. Functional Modules

- Robot Control: The various modules of the robot can work together through ROS system. An industrial computer located at the bottom of the robot acts as a host, which is responsible for controlling the movement of the robot chassis. And at the same time, it also releases and receives key messages to and from the slave computers in the disinfection section and the vision section through the communication methods within the ROS system, so as to collaborate with the realization of functions.
- Vision Recognition: This module can rapidly identify high-touch objects and pedestrians to provide the necessary information for other modules; perform real-time identification and information return tasks by means of an RGB-D camera and a combination of algorithms; and efficiently provide distance and angle information for other modules to collaborate with, by deploying on the edge calculator and establishing ROS communication with other modules.
- Navigation and Obstacle Avoidance: The robot has a powerful trajectory planning function. It relies on LiDAR SLAM algorithms to accurately locate itself in the scene; it relies on a global planner to roughly plan the path before traveling, avoiding collisions with static obstacles while trying to reach them as quickly as possible; and it relies on a local planner to finely control the movement during travel to prevent collisions with pedestrians.
- Disinfection: The robot is able to realize two sets of disinfection functions: the first is to use the irradiation of ultraviolet lamps for disinfection, which has the advantages of high efficiency and wide disinfection range; the second is to use the disinfectant spray for disinfection, which has the advantages of flexibility and can disinfect locally. When the robot moves to a disinfection site, it relies on the visual recognition

module to determine the specific disinfection area, and then the disinfection module will start working.

III. Vision Recognition

To achieve effective path planning and precise disinfection, the vision recognition module must quickly identify the target object and provide distance and angle information. To meet the demands of speed and accuracy for the target detection algorithm, we have opted for the YOLOv5s algorithm with an included attention module and lightweight convolution module. After identifying high-touched objects and human movement, the robot can perform real-time crowd avoidance and disinfection tasks. The RGB-D camera can provide distance information, while the algorithm calculates angle information. Combined with the navigation and disinfection modules, the robot can accomplish these tasks efficiently.

A. Overview of YOLOv5

YOLOv5 consists of four models that differ in model depth and parameters, yet share the same model framework [16]. The larger the model, the higher its recognition accuracy but at the possible cost of longer inference times on the NVIDIA Xavier NX edge computing platform due to an excess of parameters. Our analysis of the four models indicates that while the performance accuracy of YOLOv5s falls short of its counterparts, it demonstrates a better inference speed after training. However, we opted for this model as it exhibits the most balanced recognition performance.

B. Detection Framework

To attain rapid computation and lightweight deployment while improving accuracy, we incorporate the Convolutional Block Attention Module (CBAM) [17] and C3Ghost Module into the backbone and the neck of the YOLOv5s. The C3Ghost module comprises GhostNet [18] as its fundamental building block. GhostNet utilizes a limited number of convolutional kernels to extract features from input feature maps. Thereafter, these features are processed by linearly varying layers, rather than complex convolutional layers. Final feature maps are generated through concatenation, resulting in the final concatenated feature map. The diagram depicting the C3Ghost Module can be seen in Figure 2. CBMA is a lightweight convolutional attention module that merges channel and spatial attention mechanism modules. CBAM includes two sub-modules, the Channel Attention Module (CAM) and the Spatial Attention Module (SAM), which conduct channel and spatial attention computation, respectively.

The CAM module performs average pooling and maximum pooling of the features, followed by putting the average pooled features and maximum pooled features into the multilayer perceptron MLP to acquire the final channel attention feature map. The computation of the channel attention feature map is given by equation:

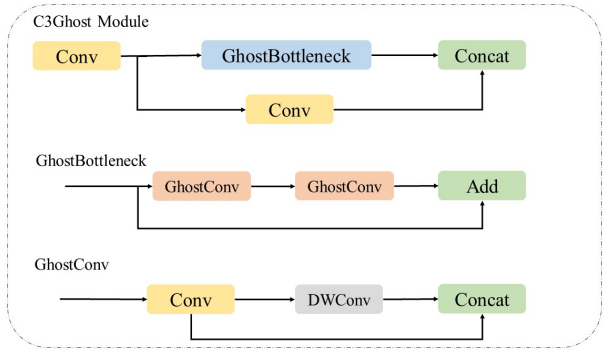

Fig. 2. The architecture of the C3Ghost module.(1) GhostConv obtains the feature map by concatenating the Conv layer output and the output after Conv and DWConv [19];(2) GhostBottleneck is formed by using two GhostConvs in series, using jump connection pathways(3) C3Ghost module output consists of concatenating GhostBottlenek and Conv layer outputs

$$\begin{aligned} M_C(F) &= \sigma(MLP(\mathrm{AvgPool}(F) + MLP(\mathrm{Max}\,Pool(F))) \\ &= \sigma\left(W_1\left(W_0\left(F^c_{\mathrm{avg}}\right)\right) + W_1\left(W_0\left(F^c_{\mathrm{max}}\right)\right)\right) \end{aligned} \tag{1}$$

$M_c(F)$ stands for channel attention features, F^c_{avg}, F^c_{max} represent the average pooling feature and the maximum pooling feature.

To compute the spatial attention, we begin by performing average pooling and maximum pooling operations on the channel dimensions. Then, we use the resulting feature maps to perform the convolution operation on the spliced feature maps, producing the final spatial attention feature maps. The spatial attention feature maps can be computed using the following formulas:

$$\begin{aligned} M_s(F) &= \sigma\left(f^{7\times7}([\mathrm{Avg\,Pool}(F); \mathrm{MaxPool}(F)])\right) \\ &= \sigma\left(f^{7\times7}\left(F^s_{\mathrm{avg}}\,; F^s_{\mathrm{max}}\right)\right) \end{aligned} \tag{2}$$

$M_s(F)$ stands for channel attention features, F^s_{avg}, F^s_{max} represent the average pooling feature and the maximum pooling feature,$f^{7\times7}$represents a convolutional kernel size of 7x7.

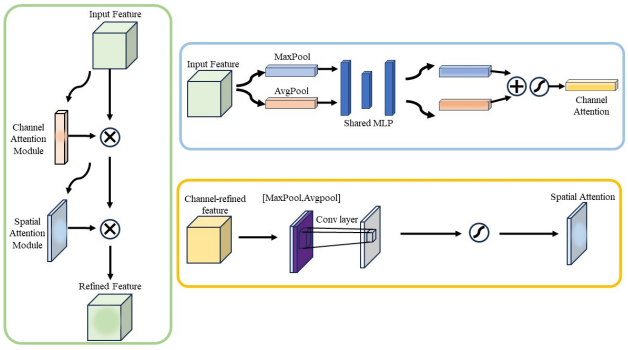

Fig. 3. The structure of the CBAM . It contains two main components, channel attention and spatial attention. Both of the two sub-modules use average-pooling and max-pooling outputs with a shared network [17].

The CBAM processes the feature map applying an attention weight to each channel and spatial location. This enhances the local features of the processed channel and spatial information, ultimately improving the ability of deep neural networks to capture and represent important features. Figure 3 is for the CBAM structure diagram and figure 4 is for the improved YOLOv5s framework diagram.

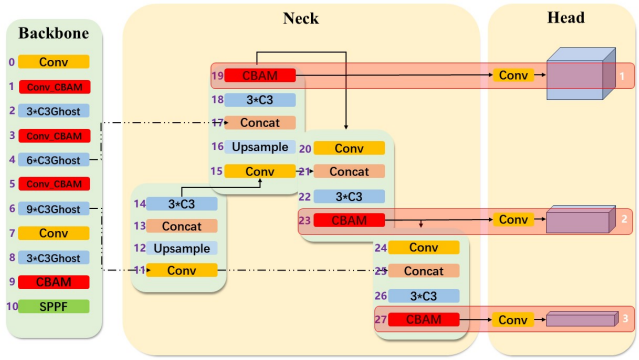

Fig. 4. Structure of the improved YOLOv5 method. Compared with the original YOLOv5 method, the method has two structural improvements.:(1) The G3Ghost module and the attention module are introduced into the backbone layer;(2) the attention module is added to the feature fusion layer.

IV. Navigation and Pedestrian Avoidance

In order to perform disinfection tasks in a wide indoor area, the robot needs to develop its mobility in a two-dimensional plane. In detail, the robot needs to build maps of disinfection scenarios, and then with given disinfection sites on a map, the robot is supposed to get to them one by one, trying to avoid obstacles along the way and making the path as short and smooth as possible. Particularly, when faced with human beings who are standing and walking, the robot should escape them flexibly in a social manner, instead of just stopping and waiting for pedestrians to pass.

To tackle this problem, a two-wheel differential mobile platform, several LiDAR sensors, and RGBD cameras are used together. Additionally, we integrate several existing algorithms and propose our pedestrian artificial potential field algorithm SA-APF based on traditional APF.

A. Mapping and Repositioning

LiDAR sensors are fixed in front and to the side of the robot so that they can detect the surrounding environments. Then using the SLAM algorithm, we can acquire the map of the indoor scenarios by remotely controlling the robot to scan all around the area. After getting the map, every time the robot moves in the same scenario, its LiDAR sensors and inertial measurement unit (IMU) can work together to accurately re-position the robot on the existing map.

B. Global Planner: RRT*

Before the robot starts to move from one disinfection site to another, a global path plan is first made, which is aimed at getting a path that circumvents the static obstacles inherent in the environment, such as walls and tables. The advance planning before moving helps to shorten planning time cost and improve path equality during robot's actual moving. A global planner is supposed to produce paths that are smooth, short and have a good capacity of obstacle avoidance. In this part, we choose RRT* as the basic algorithm, modifying several details.

The RRT* algorithm is an extension of the Rapidly-exploring Random Tree (RRT) algorithm, which can generate a collision-free path from the start to the goal. The RRT algorithm works in the following processes:

a) Sample: Randomly sample a node $Xrand$.

b) Nearest: Find the nearest node from $Xrand$ in the existing node list as $Xnear$.

c) Steer: Connect $Xrand$ and $Xnear$ as the direction of tree growth. In this direction $Xnew$ is decided based on a fixed step length. If the the line segment between $Xnew$ and $Xnear$ is collision-free, we consider this steer as successful.

d) Rewrite: For the nodes within a specified radius of $Xnew$, if the cost between the node and $Xnew$ is lower than that between $Xnew$ and its parent node and collision-free, rewrite the node as the new parent node thus the parent node is updated.

e) Iterate: Iterate the process above until the distance between $Xnew$ and the goal is less then the fixed step length and free of collision.In this way we can directly connect the last $Xnew$ and the goal and find the whole path.

Finally we get a tree consisting of a series of node, which is actually the path we need.Based on RRT, RRT* adds a rewiring operation every time after finding Xnew. For the nodes within a specified radius of Xnew, it updates the parent node if the new path is better than the original path. Compared with RRT ,RRT* can generate a gradually optimal path. Based on RRT* algorithm, we want to improve the smoothness of the generated path. Thus bezier interpolation is used to improve path equality.

C. Local Planner: SA-APF

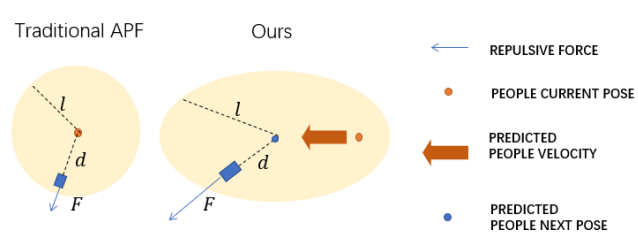

Fig. 5. Potential Field Comparison Between traditional APF and our algorithm:(1)We re-select the central point of the potential field; (2)Our potential field shape is elliptical while that of traditional APF is circular

To deal with the dynamic obstacles that may appear in the real scene, we also use a local planner based on APF algorithm, namely Socially Aware APF. APF abstracts the scene around the robot into an artificial potential field, where the obstacles give repulsive force and the targets apply attractive force to the robot. Therefore, the robot's motion is

controlled by the combined force of these two. Here is the discription of one of the most conventional potential field.

The attractive field id given by:

$$U_{att}(q) = \frac{1}{2}\eta\rho^2\left(q, q_g\right) \tag{3}$$

The direction and magnitude of attractive force are defined by the negative gradient of the attractive field function:

$$F_{att}(q) = -\nabla U_{\mathrm{att}}(X) = \eta\rho\left(q, q_g\right) \tag{4}$$

where q, q_g represents the position of the robot and the goal. η is the proportional gain coefficient of attractive force. $\rho\left(q, q_g\right)$ represents the Euclidean distance between the robot's position q and the goal point's position q_g.

Similarly, the repulsive field and repulsion are given by:

$$U_{rep}(q) = \begin{cases} \frac{1}{2}k\left(\frac{1}{\rho(q,q_o)} - \frac{1}{\rho_o}\right)^2 & 0 \le \rho\left(q, q_o\right) \le \rho_o \\ 0 & \rho\left(q, q_o\right) \ge \rho_o \end{cases} \tag{5}$$

and

$$F_{rep}(q) = \begin{cases} k\left(\frac{1}{\rho(q,q_0)} - \frac{1}{\rho_0}\right)\frac{1}{\rho^2(q,q_0)}\nabla\rho\left(q, q_0\right) & 0 \le \rho\left(q, q_0\right) \\ 0 & \rho\left(q, q_0\right) \ge \rho \end{cases} \tag{6}$$

where q_0 represents the position of the obstacle. k is the proportional gain coefficient of repulsion. $\rho\left(q, q_0\right)$ is the Euclidean distance between the robot's position q and the obstacle's position q_g. $\rho_0$is the maximum distance at which the obstacle can act on the robot.

The resultant field is the superposition of the attractive field and the repulsive field, and the gradient of the resultant field decided how the robot moves.

$$\begin{aligned} U(q) &= U_{\mathrm{att}}(q) + U_{\mathrm{rep}}(q) \\ F(q) &= -\nabla U(q) = F_{att}(q) + F_{rep}(q) \end{aligned} \tag{7}$$

Based on the basic method, we introduce our SA-APF based on mobile potential fields for pedestrians. Since pedestrians are mobile, it is necessary to take pedestrian travel into account. Firstly, we make a prediction on pedestrian's velocity. Pedestrians are captured by an RGBD camera fixed on the front of the robot.So a pedestrian's pose in the world coordinate system can be obtained from

$$T^{\mathrm{human}} = T^{\mathrm{human}}_{\mathrm{map}} = T^{\mathrm{human}}_{\mathrm{camera}} * T^{\mathrm{camera}}_{\mathrm{robot}} * T^{\mathrm{robot}}_{\mathrm{map}} \tag{8}$$

Accordingly, we can estimate real-time velocity based on pedestrian's poses from the two neighboring samples.

$$\widetilde{V}_{\mathrm{human},k} = \frac{T^{\mathrm{human}}_{k} - T^{\mathrm{human}}_{k-1}}{\sigma} \tag{9}$$

where σ indicates the sampling interval. We obtain the estimated future pedestrian velocity through the combination of the last estimated future pedestrian velocity and the estimated real-time velocity.

$$V_{\mathrm{human},k} = \alpha * V_{\mathrm{human},k-1} + (1-\alpha) * \widetilde{V}_{\mathrm{human},k} \tag{10}$$

Besides, we propose to describe the shape of the potential field to be elliptical. The relationship between its long and short axis lengths is defined as follows

$$l_{\mathrm{shortAxis}} = \beta * l_{\mathrm{longAxis}} \tag{11}$$

The long axis is parallel to the velocity direction of the robot. The center of the potential field is

$$T_{\mathrm{center}} = T_{\mathrm{human}} + V_{\mathrm{human},k} * predictTime \tag{12}$$

Then, the force given by pedestrians, to the robot, can be defined as follow:

$$F_{\mathrm{humanToRobot}} = (l - |\vec{d}|) * \frac{\vec{d}}{|\vec{d}|} \tag{13}$$

In addition to the improvement on pedestrian field, we also make a slight change in the attractive force. Instead of using the end point as the source of attractive force, we use the point which is on the path and slightly in front of the robot to provide attractive force to the robot. As a result, the robot can always run along the established path unless it encounters with some temporary obstacles, in which case it can finally move back to original path after successfully getting around temporary obstacles.

V. Experiment

A. Implementation Details of Vision Recognition

The training data comprises two sources: a pedestrian dataset from an open-source dataset [20], and an indoor high-touch object dataset developed by our team. The new dataset includes five categories: pedestrians, doorknobs, long doorknobs, white buttons, and black buttons with a total of 1688 images. We enhanced the data diversity by utilizing data augmentation techniques such as random angle rotations, noise addition, contrast elevation, and cropping to increase the resilience of the model.For training, the dataset was randomly partitioned into a training set of 1519 images and a test set of 169 images, with a ratio of 9:1.

The experiments of vision recognition are based on the Ubuntu 18.04 operating system, Intel(R) Xeon Processor CPU, 56GB of RAM, using Pytorch 1.8.1 framework, and training through an NVIDIA Tesla T4 graphics card with 16GB of video memory. Python version is 3.8.10 and the CUDA version is 12.0. The epoch numbers for model training were set to 320, and the batch size was set to 32. The optimization of network parameters is achieved through the implementation of stochastic gradient descent (SGD) as the chosen optimizer.The momentum factor is set to 0.937, the weight decay value is 0.0005, and both the initial momentum and IOU thresholds are set to 0.01

B. Comparison Methods and Ablation Study

To verify the effectiveness of the improved YOLOv5s framework proposed in this paper, experiments are conducted to compare with Faster-RCNN, YOLOv5m, and Mask-RCNN target detection algorithms; to explore the contribution of each module in this paper's algorithm to the overall algorithm, ablation experiments are conducted for CBAM

and C3Ghost modules. The above experiments are each conducted on the dataset mentioned above in this paper for network model training, and during the experimental process, the experimental conditions such as control equipment and iteration number are kept consistent, and the experimental results are derived and analyzed.

To validate that the proposed algorithm has a stronger ability for pedestrian avoidance, we compare the performance of the proposed algorithm with the state-of-the-art APF algorithm. We run the two algorithms in real-time as the robot is moving. To make the comparison more convincing, we build a map of the corridor and use RRT* global planner to generate a path from the start point to end point in advance, so that the attractive forces are given to the robot in exactly the same mode between the two. Since the robot is moving in the same scenario, the repulsive forces given by static obstacles are in the same mode as well. In terms of pedestrian setting, we set pedestrians along the path, who are respectively travelling in front of the robot slowly, face-to-face encountering with the robot, and crossing in front of the robot with a randomized travelling velocity.

Besides the comparison between different algorithms, we also list important parameters in our algorithm and expect to find out their most effective combination in the experiment.

C. Evaluation Metrics

In this paper, we have chosen mean average precision (mAP), model size, and parameters as the evaluation indices for the visual recognition module. And we have chosen arrival time (the time for robot to travel from start point to end point) and collision time(the average collision time for single turn) as the evaluation indices for the navigation and collision-avoidance module.

VI. Results and Analysis

A. Results of Vision Recognition

We use the original YOLOv5s model as a baseline, and our method shows a 16% reduction in total model parameters with the attention and lightening modules, a 2.4% improvement in map@0.5 accuracy over the baseline, and a 2.3% improvement in mAP_0.5:0.95 over the baseline, which illustrates the validity of our method.

Next we tested the model with the addition of CBAM alone, and the mAP improved by 3.9% from baseline, and testing the C3Ghost module alone revealed a 2.2% decrease in mAP, which suggests that the attention mechanism contributes to the improved accuracy, while the lightweight module decreases accuracy; when combined, they are able to have performance with lower model parameters as well as improved accuracy.

B. Results of Dynamic Pedestrian Avoidance

As is shown in figure 6, the main part in the center is a vertical view of the whole experiment scene. The blue path which is produced by global path planner is quite smooth and effective in avoiding complex static obstacles, including walls and columns. In our experiment, we make the robot encounter with three different types of pedestrians, corresponding to the three types marked in the picture. When robot moves into the potential field of pedestrians, it is subjected to repulsive force from pedestrians. The repulsive force is showed by white arrow, which is generated taking into account not only the pedestrian's position at the moment, but also the pedestrian's speed and direction, as well as the pedestrian's historical movement patterns. The red path is generated after robot's actual movement. It can be observed that a fine turn is made to avoid pedestrians, but when the risk of collision is removed, it returns to the path planned by the global planner.

Table 2 shows the comparison between our algorithm and the traditional APF. We repeat the navigation process 70 times for each algorithm, and record the average arrival time and collision time. From our experiment, our algorithm slightly shortens arrival time and reduces the risk of getting collision, which means it is safer and more efficient.However the performance improvement is not significant enough, so our algorithm needs to continue to be improved.

As is mentioned in Part IV, the APF model is related to hyper-parameters, α, β, and $predictTime$. In this part, we will discuss how to choose these hyper-parameters.

In order to improve the performance of the path planning algorithm, we need to optimize the performance of the hyper-parameters α, β, and $predictTime$, which are mentioned in Part IV.

1) Definition of Hyper-parameters and Optimization Range: We define hyper-parameters and optimization range as below:

According to (10), $\alpha \in [0, 1]$ is the proportion of the initial speed in the predicted speed of pedestrians. The larger the value of α, the greater the proportion of the predicted speed of pedestrians at the initial speed station.

According to (11), $\beta \in (0, 1]$ is the ratio of the short axis to the long axis of the pedestrian potential field, describing the motion model of pedestrians.

According to (12), $predictTime$ is the prediction time of pedestrians. The larger the value of $predictTime$, the farther away the center of the potential field formed by pedestrians is from them.

2) Evaluation Function and Optimization Method: As mentioned above, we use arrival time and collision time as the evaluation function. We use the grid search method to optimize the hyper-parameters.

We use a grid search method to optimize hyper-parameters. We divide the value range of hyper-parameters into multiple discrete values, and then search according to a certain gradient step size.

3) Results and Discussions: We conduct ten experiments on each group of parameters and obtained the following results:

As α increases, arrival time and collision time first surge and then stabilize. We infer that α is reasonable in the range of 0.6 to 1, which means α has little effect on the results within this range. We can consider the initial pedestrian speed as the predicted speed.

TABLE I

COMPARISON WITH BASELINES AND ABLATION STUDY

Method	Model	Parameters	mAP_0.5:0.95	mAP@0.5
YOLOv5s(baseline)	13.9m	7.026M	0.478	0.789
YOLOv5m	40.1m	20.873M	0.499	0.807
YOLOV5s-CBAM	13.8m	7.037M	0.517	0.809
YOLOV5s-C3Ghost	11.5m	5.875M	0.456	0.772
YOLOV5s-CABM-C3Ghost	11.6m	5.874M	0.501	0.813
Faster-RCNN	108m	28.326M	0.41	0.726
Mask-RCNN	250m	63.760M	0.372	0.693

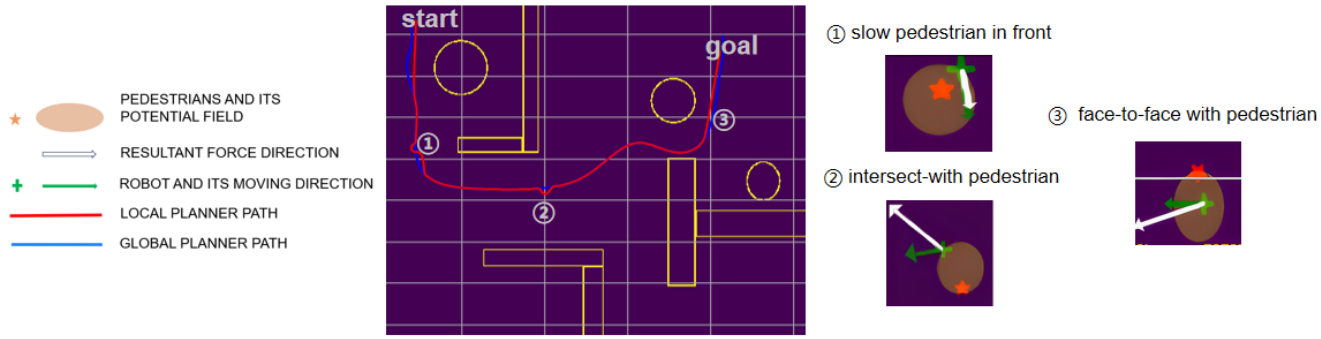

Fig. 6. The quantitative result of navigation and pedestrian avoidance. The global planner path and local planner path are observed in blue and red colored lines, and pedestrians are divided into three categories:(1)slow pedestrian in front;(2)intersect-with pedestrian;(3)face-to-face-with pedestrian.

TABLE II

COMPARISON BETWEEN OUR SA-APF AND APF

Methods	Arrival Time	Collision Time
SA-APF	92.60179	0.104
Traditional APF	96.10759	0.127

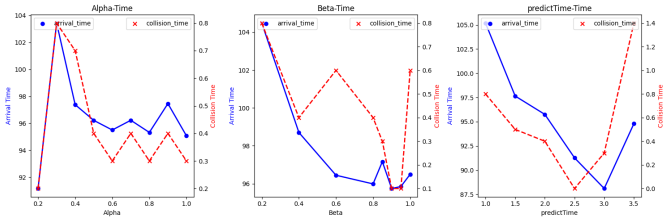

Fig. 7. The quantitative result of navigation and pedestrian avoidance determined by hyper-parameters.

As β increases, arrival time and collision time converge together when β increases to 0.9. We infer that β is reasonable in the range of 0.8 to 0.9, which means the potential field of an proper ellipse can result in better paths and fewer collisions.

As shown above, the optimal value of $predictTime$ is between 2.5 and 3.0. When $predictTime$ is too small, the potential field formed by pedestrians is too close to the robot, which will cause the path planning algorithm to be too conservative. When $predictTime$ is too large, the potential field formed by pedestrians is too far away from them, which will cause potential field failure and cause collisions.

To summarize, by adjusting the three hyper-parameters, we can plan better paths and avoid collisions.

C. Results of Offline Experiment

We want to test the robot's ability to perform a sterilization task through an offline experiment. The experiment is conducted in a 20m * 15m corridor, in which there are a total of 13 door handles and 9 switches, as well as 3 pedestrians traveling at different speeds. The expected disinfection process is as follows: first, the robot scans the entire corridor to create a map of the environment, and then we set up approximate disinfection zones for the robot. The robot will start from the starting point and reach these zones in turn, identifying high-touch disinfection sites, and then disinfecting them with the robotic arm for spraying disinfectant, or UV irradiation if the disinfecting sites are densely populated. In addition, if it encounters pedestrians while traveling, it will take an active approach to avoid them.

After the experiment, our robot can successfully complete the disinfection of a total of 22 sites, and for the three pedestrians, it has taken active and flexible avoidance. Thus the initial proof of its effect is good.

VII. CONCLUSIONS

The need for efficient disinfection of busy indoor public spaces has been underlined by the growing awareness of public health hazards, which has led to the creation of automated disinfection robots. However, the majority of robots in use today spray disinfectant everywhere and are still too immature to maneuver through congested, dynamic environments. Therefore, in this study, we build a new robotic system for disinfection. We first suggest a vision-based approach for precisely identifying high-touch locations in the environment, allowing the disinfection robot to achieve

improved disinfection efficiency, to overcome the aforementioned difficulties.We improve the YOLOv5s algorithm and verify that it is more accurate than the original YOLOv5s model while having a lighter size. Additionally, we provide the Socially Aware APF (SA-APF), a dynamic pedestrian avoidance system that can anticipate pedestrian movement trends and plan the course in real-time. Further, we compare our SA-APF algorithm with the traditional APF algorithm and prove that our algorithm's navigation is more efficient and has a higher success rate in avoiding pedestrians. We also use grid search to optimize the values of important hyper-parameters, in order to make the navigation efficiency and obstacle avoidance safety optimal in combination.

At the same time, there are still some unresolved issues in this work: in terms of visual recognition, the pedestrian's motion has a certain degree of uncertainty, which needs to be taken into account at the same time. Meanwhile, the recognition frame rate of our vision recognition module is 23 fps, which is a difficulty for real-time recognition tasks, and we still need to work on improving the recognition rate on edge computing devices.In terms of navigation and obstacle avoidance, our SA-APF model is rather idealized. In fact, human, as an intelligent body, will actively react to the robot's approach by avoiding it, so it is not comprehensive enough to consider only the pedestrian's unilateral effect on the robot.

However, Our robot encourages a more automated and intelligent disinfection process, contributing to safeguarding public health in the post-pandemic era, and providing inspiration to facilitate the lives of residents.

REFERENCES

[1] Y.-L. Zhao, H.-P. Huang, T.-L. Chen, P.-C. Chiang, Y.-H. Chen, J.-H. Yeh, C.-H. Huang, J.-F. Lin, and W.-T. Weng, "A smart sterilization robot system with chlorine dioxide for spray disinfection," *IEEE Sensors Journal*, vol. 21, no. 19, pp. 22 047–22 057, 2021.

[2] Z. Zeng, P.-J. Chen, and A. A. Lew, "From high-touch to high-tech: Covid-19 drives robotics adoption," *Tourism geographies*, vol. 22, no. 3, pp. 724–734, 2020.

[3] Y.-L. Zhao, H.-P. Huang, T.-L. Chen, P.-C. Chiang, Y.-H. Chen, J.-H. Yeh, C.-H. Huang, J.-F. Lin, and W.-T. Weng, "A smart sterilization robot system with chlorine dioxide for spray disinfection," *IEEE Sensors Journal*, vol. 21, no. 19, pp. 22 047–22 057, 2021.

[4] L. Tiseni, D. Chiaradia, M. Gabardi, M. Solazzi, D. Leonardis, and A. Frisoli, "Uv-c mobile robots with optimized path planning: Algorithm design and on-field measurements to improve surface disinfection against sars-cov-2," *IEEE Robotics & Automation Magazine*, vol. 28, no. 1, pp. 59–70, 2021.

[5] D.-E. Schahawi, W. Zingg, M. Vos, H. Humphreys, L. Lopez-Cerero, A. Fueszl, J. R. Zahar, E. Presterl *et al.*, "Ultraviolet disinfection robots to improve hospital cleaning: Real promise or just a gimmick?" *Antimicrobial Resistance & Infection Control*, vol. 10, no. 1, pp. 1–3, 2021.

[6] S. Ren, K. He, R. Girshick, and J. Sun, "Faster r-cnn: Towards real-time object detection with region proposal networks," *Advances in neural information processing systems*, vol. 28, 2015.

[7] K. He, G. Gkioxari, P. Dollár, and R. Girshick, "Mask r-cnn," in *Proceedings of the IEEE international conference on computer vision*, 2017, pp. 2961–2969.

[8] J. Redmon, S. Divvala, R. Girshick, and A. Farhadi, "You only look once: Unified, real-time object detection," in *2016 IEEE Conference on Computer Vision and Pattern Recognition (CVPR)*, 2016, pp. 779–788.

[9] S. Silva, D. Paillacho, N. Verdezoto, and J. D. Hernández, "Towards online socially acceptable robot navigation," in *2022 IEEE 18th International Conference on Automation Science and Engineering (CASE)*, 2022, pp. 707–714.

[10] H. Q. T. Ngo, V. N. Le, V. D. N. Thien, T. P. Nguyen, and H. Nguyen, "Develop the socially human-aware navigation system using dynamic window approach and optimize cost function for autonomous medical robot:," *Advances in Mechanical Engineering*, vol. 12, no. 12, pp. 1400–1405, 2020.

[11] T. Kruse, A. K. Pandey, R. Alami, and A. Kirsch, "Human-aware robot navigation: A survey," *Robotics & Autonomous Systems*, vol. 61, no. 12, pp. 1726–1743, 2013.

[12] O. Khatib, "Real-time obstacle avoidance for manipulators and mobile robots," *The international journal of robotics research*, vol. 5, no. 1, pp. 90–98, 1986.

[13] J. Borenstein and Y. Koren, "Real-time obstacle avoidance for fast mobile robots in cluttered environments," in *Proceedings., IEEE International Conference on Robotics and Automation*. IEEE, 1990, pp. 572–577.

[14] P. Vadakkepat, K. C. Tan, and W. Ming-Liang, "Evolutionary artificial potential fields and their application in real time robot path planning," in *Proceedings of the 2000 Congress on Evolutionary Computation. CEC00 (Cat. No.00TH8512)*, vol. 1, 2000, pp. 256–263 vol.1.

[15] O. Montiel, R. Sepúlveda, and U. Orozco-Rosas, "Optimal path planning generation for mobile robots using parallel evolutionary artificial potential field," *Journal of Intelligent & Robotic Systems*, vol. 79, pp. 237–257, 2015.

[16] J. Redmon, S. Divvala, R. Girshick, and A. Farhadi, "You only look once: Unified, real-time object detection," in *Proceedings of the IEEE conference on computer vision and pattern recognition*, 2016, pp. 779–788.

[17] S. Woo, J. Park, J.-Y. Lee, and I. S. Kweon, "Cbam: Convolutional block attention module," in *Proceedings of the European conference on computer vision (ECCV)*, 2018, pp. 3–19.

[18] K. Han, Y. Wang, Q. Tian, J. Guo, C. Xu, and C. Xu, "Ghostnet: More features from cheap operations," in *Proceedings of the IEEE/CVF conference on computer vision and pattern recognition*, 2020, pp. 1580–1589.

[19] F. Chollet, "Xception: Deep learning with depthwise separable convolutions," in *Proceedings of the IEEE conference on computer vision and pattern recognition*, 2017, pp. 1251–1258.

[20] W. Li, R. Zhao, and X. Wang, "Human reidentification with transferred metric learning," in *ACCV*, 2012.