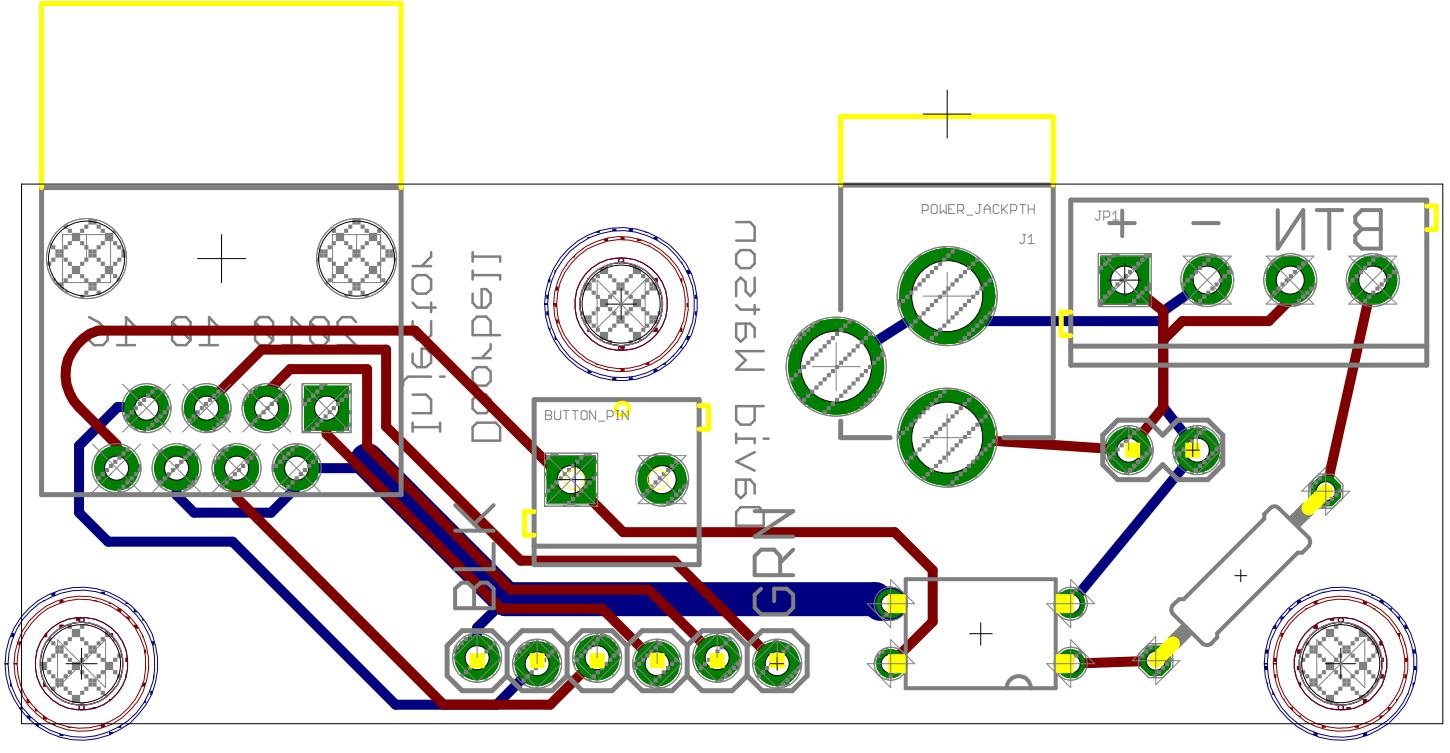

Copyright 2010 David Watson
CC BY-SA 3.0