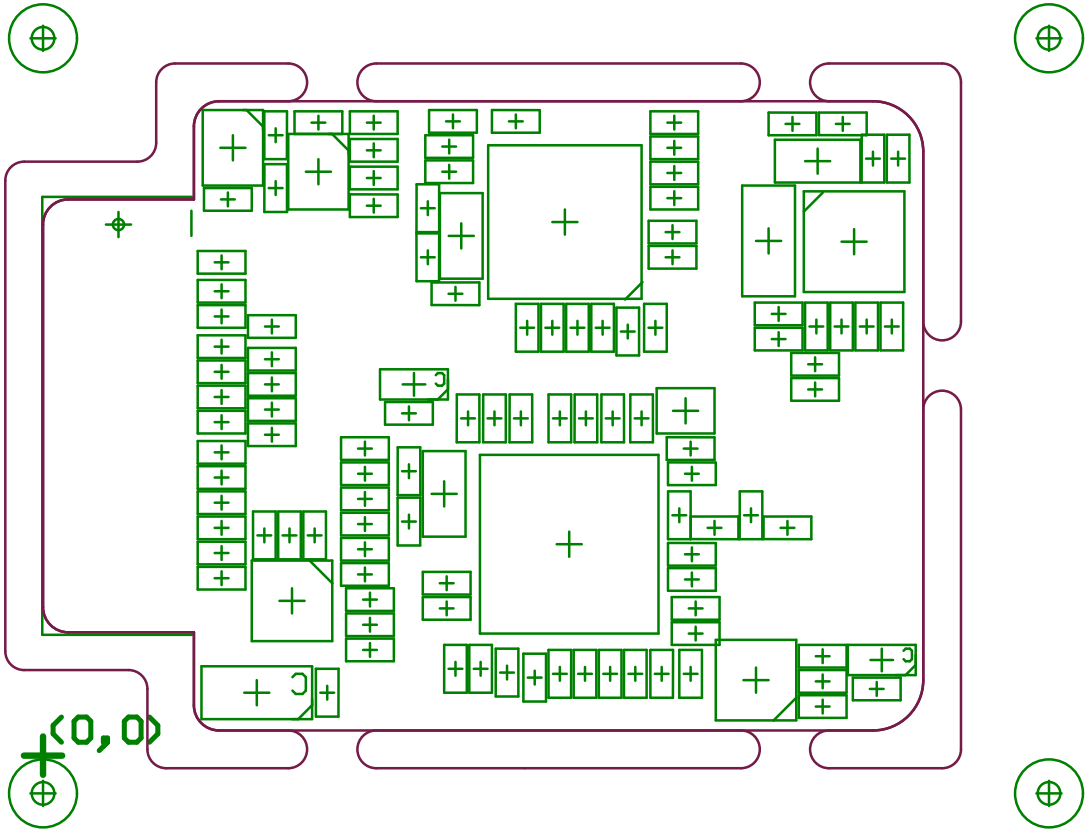
(0,0)

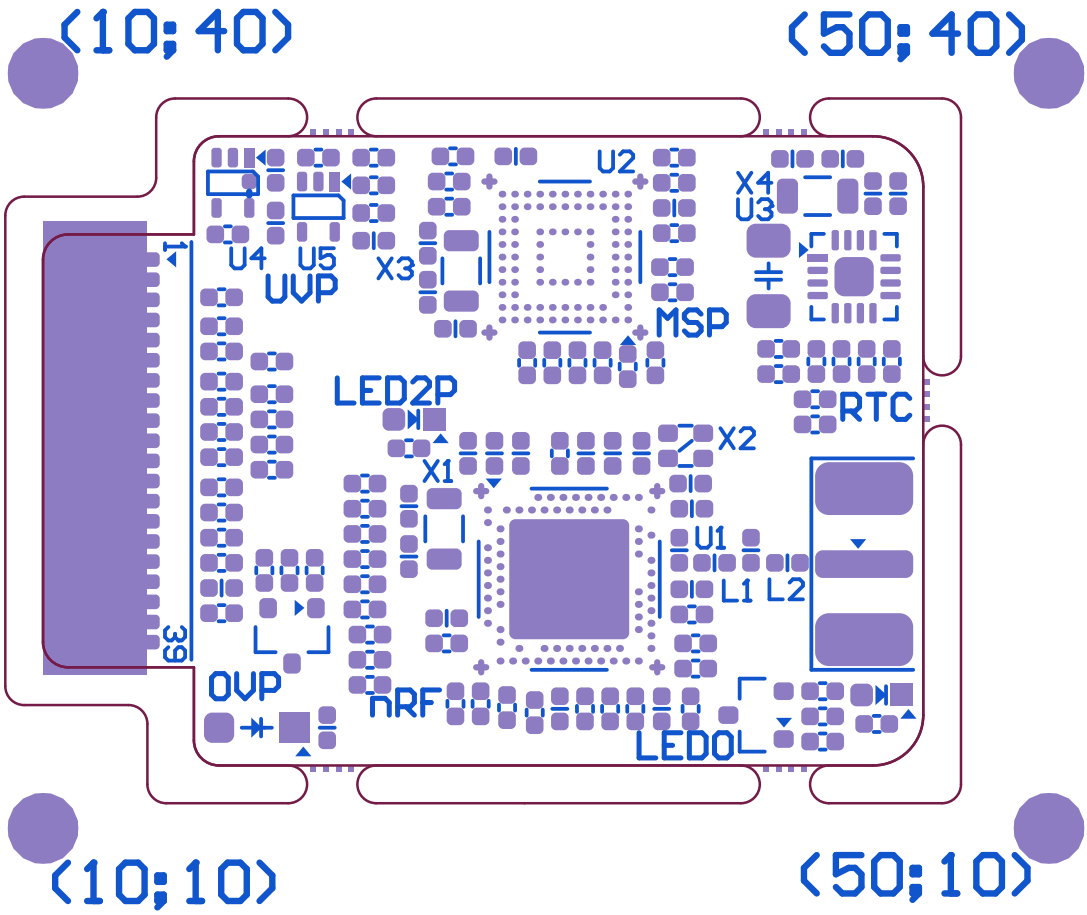
(10;40)
(50;40)
U2
X4
U3
U4
U5
X3
UVP
MSP
LED2P
RTC
X2
X1
U1
L1
L2
1
39
OVP
nRF
LED0
(10;10)
(50;10)

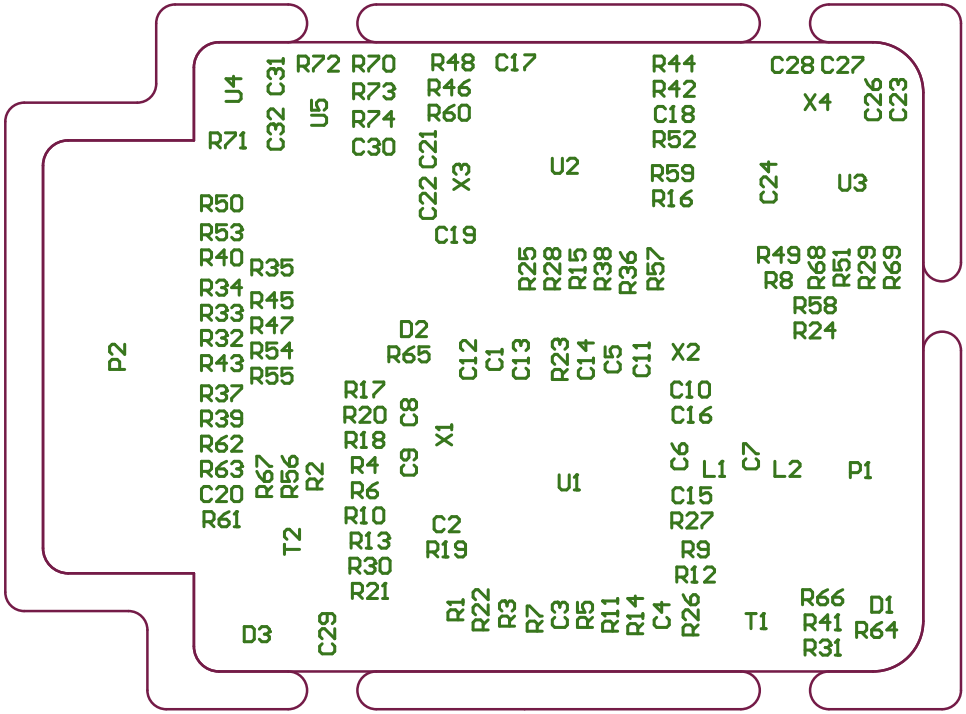
U4
C31
R72
R70
R48
C17
R44
C28
C27
R73
R46
R42
X4
C26
C23
C32
U5
R74
R60
C18
R71
C30
C21
R52
U2
R59
C24
U3
C22
X3
R16
R50
C19
R53
R40
R35
R25
R28
R15
R38
R36
R57
R49
R68
R51
R29
R69
R34
R45
R8
R58
R33
R47
D2
R24
R32
R54
R65
C12
C1
C13
R23
C14
C5
C11
X2
P2
R43
R55
R17
C10
R37
R20
C8
C16
R39
R18
X1
R62
C6
C7
R63
R4
C9
L1
L2
P1
R67
R56
R2
U1
C20
R6
C15
R61
R10
C2
R27
T2
R13
R19
R9
R30
R12
R21
R66
D1
R1
R22
R3
R7
C3
R5
R11
R14
C4
R26
T1
R41
R64
D3
C29
R31

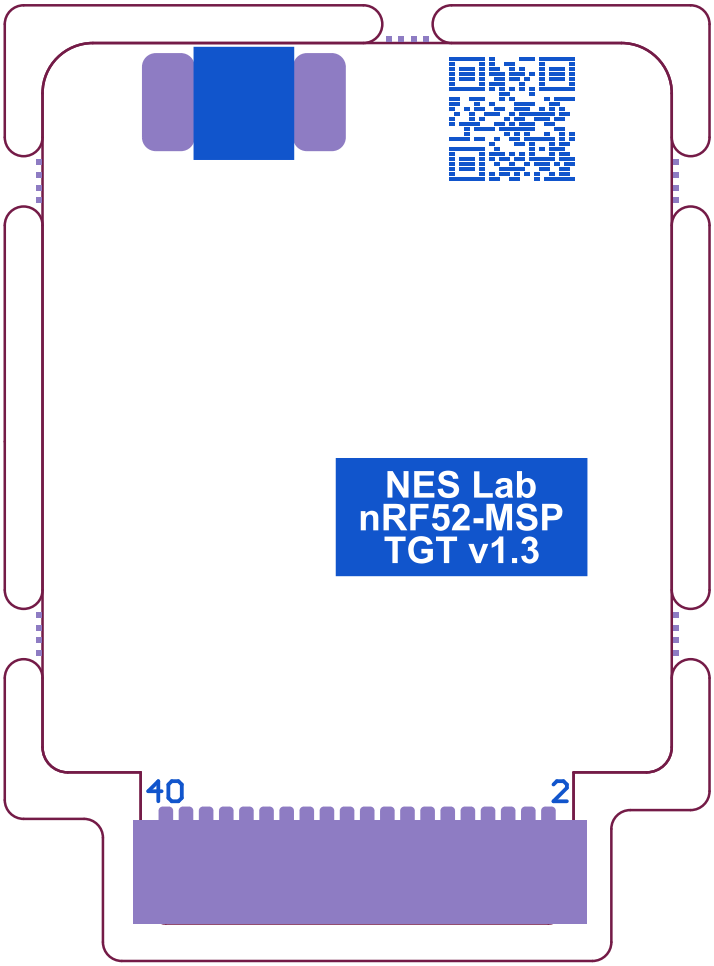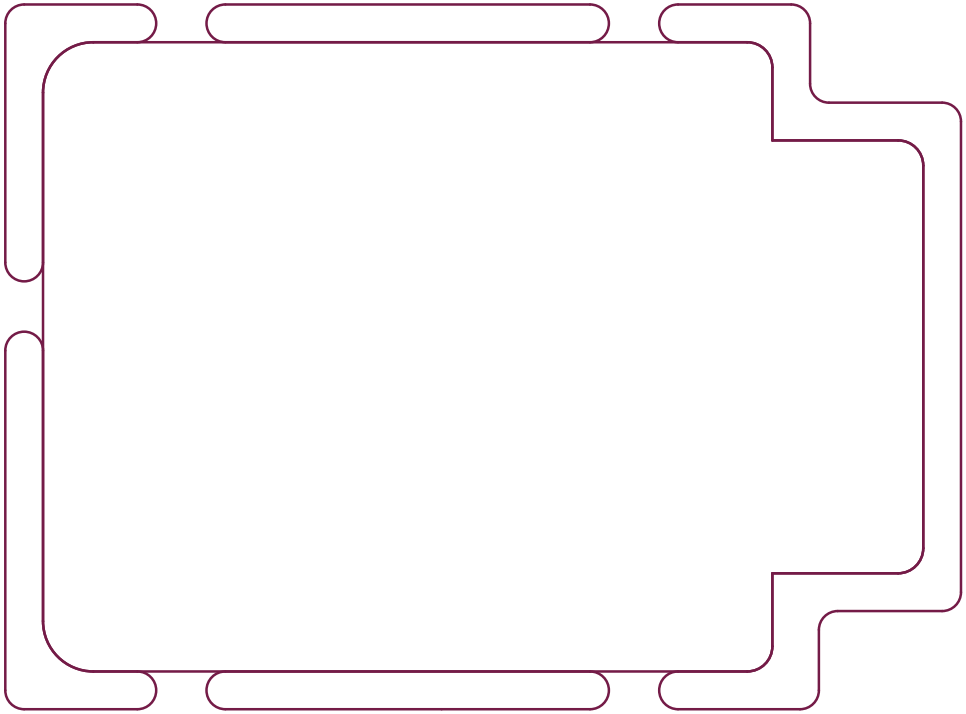
NES Lab
nRF52-MSP
TGT v1.3
40
2