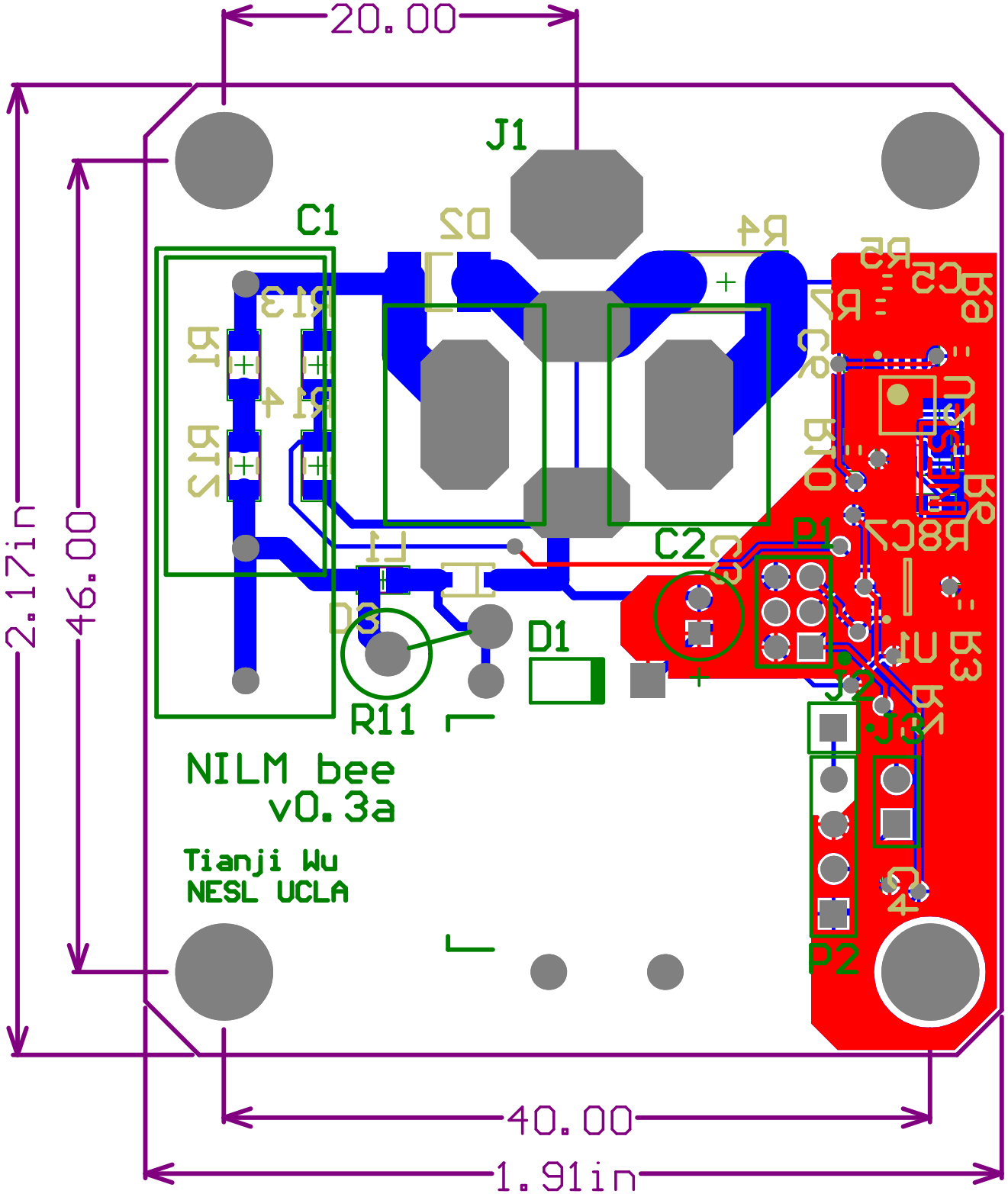
20.00
J1
C1
D2
R4
R13
R14
R12
C2
P1
D3
D1
R11
J2
J3
P2
NILM bee
v0.3a
Tianji Wu
NESL UCLA
2.17in
46.00
40.00
1.91in

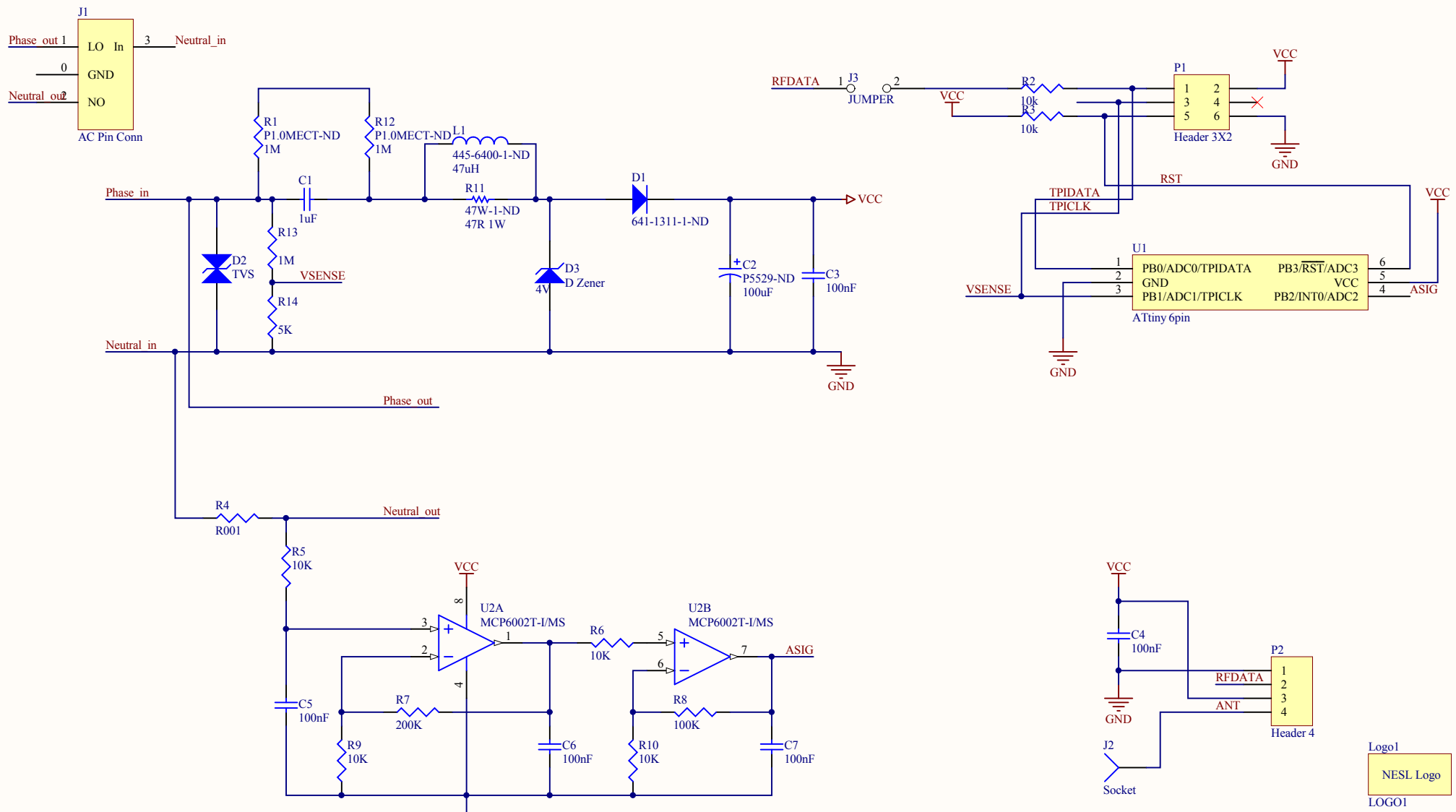

Title		
Size A4	Number	Revision
Date: 12/21/2011		Sheet of
File: C:\Users\..\Sheet-nilm1.SchDoc		Drawn By: