Rigado Inc.
3950 Fairview Industrial Dr.
Salem, Oregon 97302
866-6-RIGADO ◆ modules@rigado.com
www.rigado.com/modules

BMD-340 Module for Bluetooth 5 and 802.15.4

The **BMD-340** is an advanced, highly flexible, ultra-low power multiprotocol SoM that enables **Bluetooth 5** (BLE) and **IEEE 802.15.4** (Thread and Zigbee) connectivity for portable, extremely low power embedded systems. With an ARM® Cortex™-M4F CPU, integrated 2.4GHz transceiver, and an integrated antenna, the **BMD-340** provides a complete RF solution allowing faster time to market with reduced development costs. Providing full use of the **Nordic nRF52840**'s capabilities and peripherals, the **BMD-340** can power the most demanding applications, all while simplifying designs and reducing BOM costs. The **BMD-340** is an ideal solution for designs that require the latest **Bluetooth 5** features or 802.15.4 based networking for Thread. Increased integration with built in USB and 5.5V compatible DC/DC supply reduces design complexity and BOM cost, while expanding possible applications. **BMD-340** designs are footprint compatible with the **BMD-300/301/BMD-330**, providing low-cost flexibility for tiered product lineups.

1. Features

- Based on the Nordic nRF52840 SoC
- Bluetooth 5 Long Range, 2Mbs, and Advertising Extension support
- IEEE 802.15.4 with Thread and Zigbee support
- Complete RF solution with integrated antenna
- Integrated DC-DC converter
- No external components required
- ARM® Cortex™-M4F 32-bit processor
- ARM® TrustZone® Cryptocell 310 security
- True Random Number Generator
- Serial Wire Debug (SWD)
- Nordic SoftDevice ready
- 1MB embedded flash memory
- 256kB RAM
- 48 General Purpose I/O Pins
- -40C to +85C Temperature Range
- FCC: **2AA9B10**
- 12-bit/200KSPS ADC
- One Full-Speed USB (12Mbps)
- Four SPI Master/Slave (8 Mbps)
- Quad SPI with Execute in Place (XIP)
- Low power comparator
- Temperature sensor
- Two 2-wire Master/Slave (I2C compatible)
- I2S audio interface
- Two UARTs (w/ CTS/RTS and DMA)
- 20 channel CPU independent Programmable Peripheral Interconnect (PPI)
- Quadrature Demodulator (QDEC)
- 128-bit AES HW encryption
- 5 x 32bit, 3 x 24bit Real Timer Counters (RTC)
- NFC-A tag interface for OOB pairing
- Dimensions: 15.0 x 10.2 x 1.9mm
- IC: **12208A-10**

2. Applications

- Climate Control
- Lighting Products
- Safety and Security
- Home Appliances
- Access Control
- Internet of Things
- Home Health Care
- Advanced Remote Controls
- Smart Energy Management
- Low-Power Sensor Networks
- Interactive Entertainment Devices
- Environmental Monitoring
- Hotel Automation
- Office Automation

3. Ordering Information

Email modules@rigado.com for quotes and ordering or visit www.rigado.com/BMD-340

Part Number	Description
BMD-340-A-R	BMD-340 module, Rev A, nRF52840-QIAA, Tape & Reel, 1000 piece multiples
BMD-340-A-EVK	BMD-340-A Evaluation Kit with Segger J-Link programmer
BMD-340-EVK	BMD-340-A Evaluation Kit with Segger J-Link programmer

Table 1 – Ordering Part Numbers

4. Block Diagram

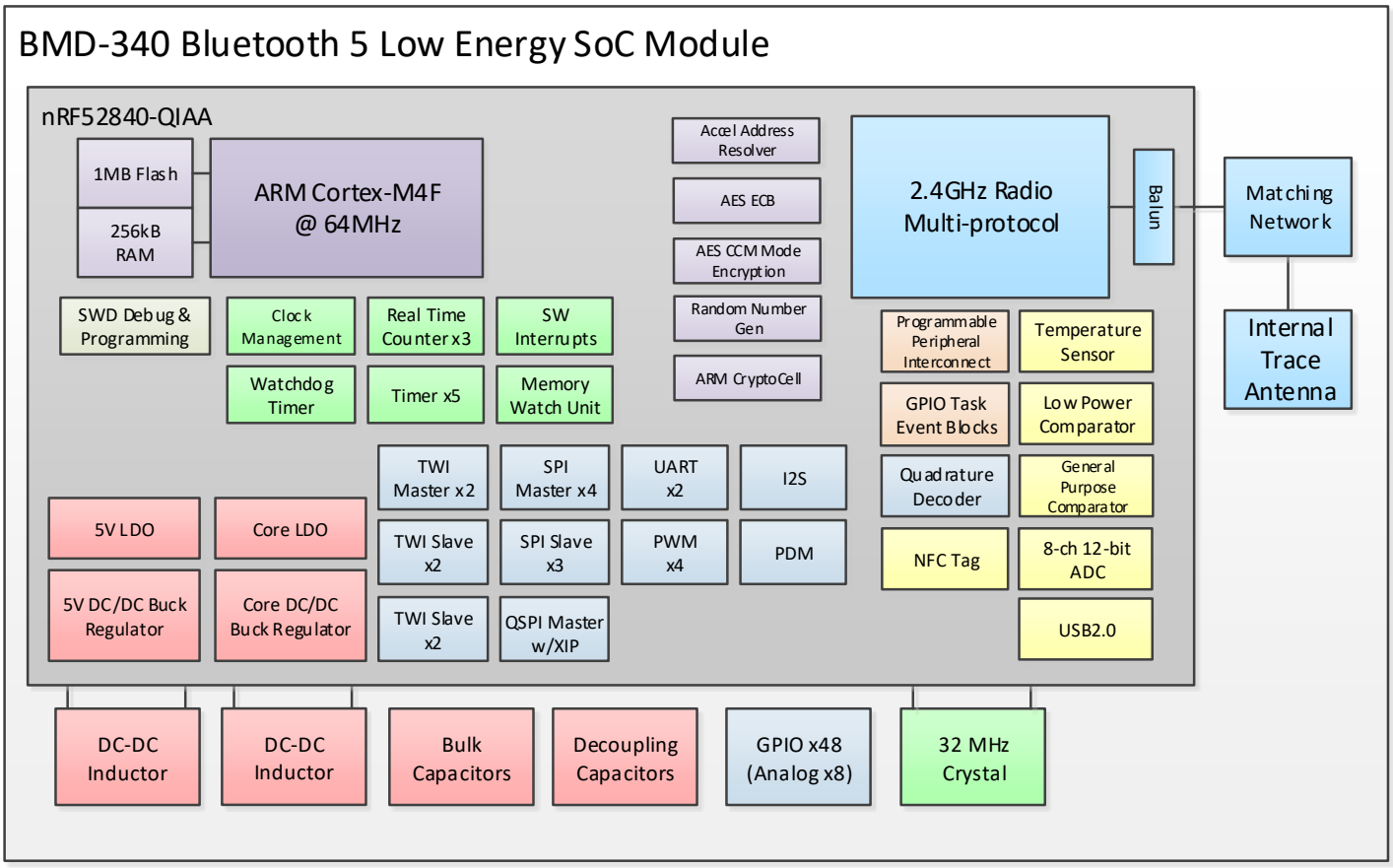

Figure 1 – Block Diagram

Table of Contents

1. FEATURES 1
2. APPLICATIONS 1
3. ORDERING INFORMATION 2
4. BLOCK DIAGRAM 2
5. QUICK SPECIFICATIONS 5
6. PIN DESCRIPTIONS 6
6.1 BMD-340 6
6.2 Peripheral Pins 8
6.3 BMD-300 Series Footprint Compatibility and Migration 9
6.3.1 BMD-300/301/330 to BMD-340 Pad Differences 10
6.3.2 BMD-300/301/330 to BMD-340 Design Migration 10
6.4 BMD-340 Fanout Example 12
7. ELECTRICAL SPECIFICATIONS 13
7.1 Absolute Maximum Ratings 13
7.2 Operating Conditions 13
7.3 Power and DCDC Configuration 14
7.3.1 USB Power 14
7.3.2 Normal (LV) Power Mode Examples 15
7.3.3 High Voltage (HV) Power Mode Examples 16
7.4 General Purpose I/O 17
7.5 Module RESET 17
7.6 Debug & Programming 17
7.7 Clocks 18
8. FIRMWARE 19
8.1 Factory Image 19
8.2 SoftDevices 19
8.2.1 S140 19
8.3 IEEE 802.15.4 (Thread and Zigbee) 19
8.4 MAC Address Info 20
9. MECHANICAL DATA 21
9.1 Mechanical Dimensions 21
9.2 Recommended PCB Land Pads 21
10. MODULE MARKING 22
11. RF DESIGN NOTES 22
11.1 Recommended RF Layout & Ground Plane 22
11.2 Mechanical Enclosure 23
11.3 Antenna Patterns 23
12. EVALUATION BOARDS 26
13. EDGE CONNECTIVITY SOLUTIONS 26
14. BLUETOOTH QUALIFICATION 27
15. REGULATORY STATEMENTS 27
15.1 FCC Statement: 27
15.2 FCC Important Notes 27
15.3 IC Statement: 29
15.4 IC Important Notes 29
15.5 CE Regulatory 30
15.6 Australia / New Zealand 30
16. SOLDER REFLOW TEMPERATURE-TIME PROFILE 31
16.1 Moisture Sensitivity Level 31
17. PACKAGING AND LABELING 31
17.1 Carrier Tape Dimensions 31
17.2 Reel Packaging 32
17.3 Packaging Label 32
18. CAUTIONS 33
19. LIFE SUPPORT POLICY 33
20. DOCUMENT HISTORY 34
21. RELATED DOCUMENTS 34

List of Figures

Figure 1 – Block Diagram 2
Figure 2 – BMD-340 Pin out (Top View) 6
Figure 3 – BMD-340 and BMD-300/301/330 Footprint Comparison 9
Figure 4 – BMD-300 Module Soldered to BMD-340 Footprint 10
Figure 5 – BMD-300 to BMD-340 Migration Example 11
Figure 6 – BMD-340 2 Layer Fanout Example 12
Figure 7 – LV Mode w/ Coin Cell Example 15
Figure 8 – LV Mode Example w/ USB and External Regulator 15
Figure 9 – USB Powered HV Mode Example 16
Figure 10 – LiPo Powered HV Example w/ USB Charger 16
Figure 11 – BMD-340 MAC Address on Label 20
Figure 12 – BMD-340 Module Dimensions 21
Figure 13 – BMD-340/301 Dimensions (Top View) 21
Figure 14 – BMD-340 Module Marking 22
Figure 15 – BMD-340 RF Example based on EVAL Board 23
Figure 16 – X-Y-Z Antenna Orientation 23
Figure 17 – BMD-340 Evaluation Board 26
Figure 18 – Reflow Profile for Lead Free Solder 31
Figure 19 - BMD-340 Tape Dimensions 31
Figure 20 – Reel Packaging 32
Figure 21 – Packaging Label 32

List of Tables

Table 1 – Ordering Part Numbers 2
Table 2 – Quick Specifications 5
Table 3 – BMD-340 Pin Descriptions 8
Table 4 – Peripheral Pin Options 8
Table 5 – Peripherals with Shared Registers 8
Table 6 – BMD-300/301/330 to BMD-340 Pad Differences 10
Table 7 – Absolute Maximum Ratings 13
Table 8 – Operating Conditions 13
Table 9 – Power Mode Pin Connections 14
Table 10 – GPIO 17
Table 11 – 32.768 kHz Crystal 18
Table 12 – 32.768 kHz Oscillator 18

5. Quick Specifications

Bluetooth		
Version	5.0 (*Bluetooth* Low Energy) Concurrent Central & Peripheral (S140)	
Security	AES-128	
LE connections	Up to 20 as Central, 1 as Peripheral, Observer, Broadcaster (S140)	
IEEE 802.15.4		
Thread Stack	OpenThread, Thread 1.1 certified	
Thread Security	AES-128, ARM® Cryptocell accelerated	
Zigbee Stack	Zigbee 3.0	
Radio		
Frequency	2.360GHz to 2.500GHz	
Modulations	GFSK at 1 Mbps and 2Mbps, QPSK at 250kbps	
Transmit power	+8 dBm	
Receiver sensitivity	-93dBm (2Mbps), -96 dBm (1Mbps), -103 (125ksps BLE), -100 dBm (IEEE 802.15.4)	
Antenna	Integrated	
Current Consumption		
TX only @ +8 dBm, 0 dBm @ 3V, DCDC enabled	14.8 mA, 4.8 mA	
TX only @ +8 dBm, 0 dBm	32.7 mA, 10.6 mA	
RX only @ 1 Mbps @ 3V, DCDC enabled	4.6 mA	
RX only @ 1 Mbps	9.9 mA	
CPU @ 64MHz from flash, from RAM	6.3 mA, 5.2mA	
CPU @ 64MHz from flash, from RAM @ 3V, DCDC enabled	3.3 mA, 2.8mA	
System Off, On (Supply on VDD), no RAM retention	0.4 µA, 0.97 µA	
System Off, On (Supply on VDD), full 256kB RAM retention	1.86 µA, 2.35µA	
Dimensions		
BMD-340	Length Width Height	15.0 mm ± 0.3 mm 10.2 mm ± 0.3 mm 1.9 mm ± 0.1 mm
Hardware		
Interfaces	SPI Master/Slave x4 Quad SPI x1 UART x2 Two-Wire Master/Slave (I2C) x2 GPIO x48	I2S x1 PWM x12 PDM x1 USB 2.0 x1 Analog input x8
Power supply	VDD: 1.7V to 3.6V, 1.75V required to start DCDC VDDH: 2.5V to 5.5V VBUS: 4.35V to 5.5V (For USB operation)	
Temperature Range	-40 to +85°C	
Certifications		
FCC	FCC part 15 modular certification BMD-340 FCC ID: **2AA9B10**	
IC	Industry Canada RSS-210 modular certification BMD-340 IC: **12208A-10**	
CE	EN 60950-1: 2011-01 EN 301 489-1 V2.1.1& EN 301 489-17 V3.1.1 EN 300 328 V2.1.1	3.1 (a): Health and Safety of the User 3.1 (b): Electromagnetic Compatibility 3.2: Effective use of spectrum allocated
Australia / New Zealand	AS/NZS 4268 :2012+AMDT 1:2013, Radio equipment and systems – Short range devices	
Bluetooth	BMD-340 RF-PHY Component (Tested) – DID: D040773; QDID: 95452	

Table 2 – Quick Specifications

6. Pin Descriptions

6.1 BMD-340

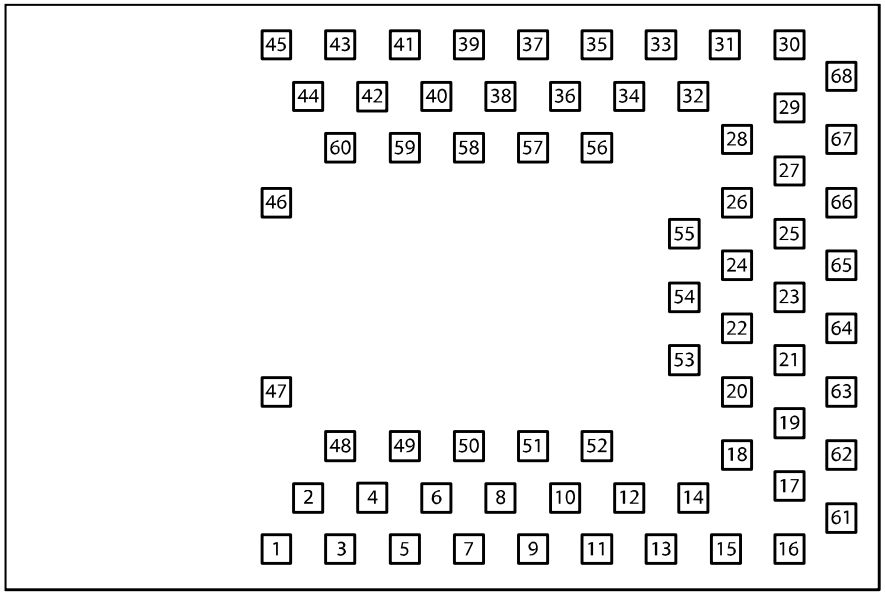

Figure 2 – BMD-340 Pin out (Top View)

Pin description

Pin	Name	Direction	Description
6	P0.25	In/Out	GPIO
7	P0.26	In/Out	GPIO
8	P0.27	In/Out	GPIO
9	P0.28	In/Out	GPIO/AIN4[2]
10	P0.29	In/Out	GPIO/AIN5[2]
11	P0.30	In/Out	GPIO/AIN6[2]
12	P0.31	In/Out	GPIO/AIN7[2]
13	P0.00	In/Out	GPIO/XTAL1 (32.768kHz)
14	P0.01	In/Out	GPIO/XTAL2 (32.768kHz)
15	P0.02	In/Out	GPIO/AIN0[2]
19	P0.03	In/Out	GPIO/AIN1[2]
20	P0.04	In/Out	GPIO/AIN2
21	P0.05	In/Out	GPIO/AIN3
22	P0.06	In/Out	GPIO
23	P0.07	In/Out	GPIO/TRACECLK
24	P0.08	In/Out	GPIO
25	P0.09	In/Out	GPIO/NFC1[2]
26	P0.10	In/Out	GPIO/NFC2[2]
27	P0.11	In/Out	GPIO/TRACEDATA[2]
28	P0.12	In/Out	GPIO/TRACEDATA[1]
31	P0.13	In/Out	GPIO

Pin	Name	Direction	Description
32	P0.14	In/Out	GPIO
33	P0.15	In/Out	GPIO
34	P0.16	In/Out	GPIO
35	P0.17	In/Out	GPIO
36	P0.21	In/Out	GPIO
37	P0.19	In/Out	GPIO
38	P0.20	In/Out	GPIO
39	P0.18	In/Out	GPIO/$\overline{\text{RESET}}$
40	P0.22	In/Out	GPIO
41	P0.23	In/Out	GPIO
42	P0.24	In/Out	GPIO
43	SWCLK	In	SWD Clock
44	SWDIO	In/Out	SWD IO
48	P1.05	In/Out	GPIO[2]
49	P1.06	In/Out	GPIO[2]
50	P1.07	In/Out	GPIO[2]
51	P1.08	In/Out	GPIO
52	P1.09	In/Out	GPIO/TRACEDATA[3]
53	P1.10	In/Out	GPIO[2]
54	P1.11	In/Out	GPIO[2]
56	P1.00	In/Out	GPIO/TRACEDATA[0]/SWO
57	P1.01	In/Out	GPIO[2]
58	P1.02	In/Out	GPIO[2]
59	P1.03	In/Out	GPIO[2]
60	P1.04	In/Out	GPIO[2]
61	P1.12	In/Out	GPIO[2]
62	P1.13	In/Out	GPIO[2]
63	P1.14	In/Out	GPIO[2]
64	P1.15	In/Out	GPIO[2]
67	USB-D-	In/Out	USB Data -
68	USB-D+	In/Out	USB Data +
66	VBUS	Power	USB PHY supply: 4.35V to 5.5V in Connect to USB Host device 5V supply
17	VCC[1]	Power In/Out	LV Mode: 1.7V to 3.6V in HV Mode: 1.8V to 3.3V supply out[3]
65	VCCH[1]	Power	LV Mode: Connect to VCC HV Mode: 2.5V to 5.5V in
1, 2, 3, 4, 5, 16, 18, 29, 30, 45, 46, 47, 55	GND	Power	Electrical Ground

Note 1: An internal 4.7µF bulk capacitor is included on the module. However, it is good design practice to add additional bulk capacitance as required for your application, i.e. those with heavy GPIO usage and/or current draw.

Note 2: These pins are in close proximity to the nRF52 radio power supply and antenna pins. Radio performance parameters, such as sensitivity, may be affected by high frequency digital I/O with large sink/source current on these pins. Nordic recommends using only low frequency, low-drive functions when possible.

Note 3: In HV mode, VCC acts as a regulated supply that can power other external devices. The voltage output of VCC can be configured in software but is limited to no more than VCCH-0.3V. In System Off mode VCC can supply no more than 1mA.

Table 3 – BMD-340 Pin Descriptions

6.2 Peripheral Pins

The BMD-340 features a pin muxing system that allows most internal peripherals, such as UART and SPI, to be used on any GPIO pin. This freedom in pin choice enables better optimization of designs and PCB layout. Note that only one peripheral signal can be muxed to a GPIO pin at a time. Some functions are restricted to certain pins due to additional internal circuitry required by the interface. These include: Trace signals, analog inputs, XTAL signals, USB signals, SWD interface, and reset. See Table 4 below for details:

Peripheral	Signal	Pin Options
UART0, UART1	All	P0.00-P0.31, P1.00-P1.15
I2C0, I2C1		
SPI0, SPI1, SPI2, SPI3		
I2S0		
QSPI0		
PWM0, PWM1, PWM2, PWM3		
PDN0		
ADC, COMP, LPCOMP	All	P0.02-P0.05, P0.28-P0.31 (AIN0-AIN7)
NFC	NFC1	P0.09
	NFC2	P0.10
Reset	$\overline{\text{RESET}}$	P0.18
Trace	TRACECLK	P0.07
	SWO/TRACEDATA[0]	P1.00
	TRACEDATA[1]	P0.12
	TRACEDATA[2]	P0.11
	TRACEDATA[3]	P1.09
SWD	SWD Clock	SWCLK
	SWD IO	SWDIO
32.768kHz Crystal	XTAL1	P0.00
	XTAL2	P0.01
USB	USB Data +	USB-D+
	USB Data -	USB-D-

Table 4 – Peripheral Pin Options

Note: Some peripherals on the BMD-340 share the same memory location for their registers. This means that only one of these peripherals can be used at a time. It is possible to switch between peripherals that share the same register location by clearing and reinitializing the associated configuration registers. See the Nordic Semiconductor nRF52840 Product Specification for details.

Peripheral ID	Base Address	Shared Peripherals	
3	0x40003000	SPI0	I2C0
4	0x40004000	SPI1	I2C1

Table 5 – Peripherals with Shared Registers

6.3 BMD-300 Series Footprint Compatibility and Migration

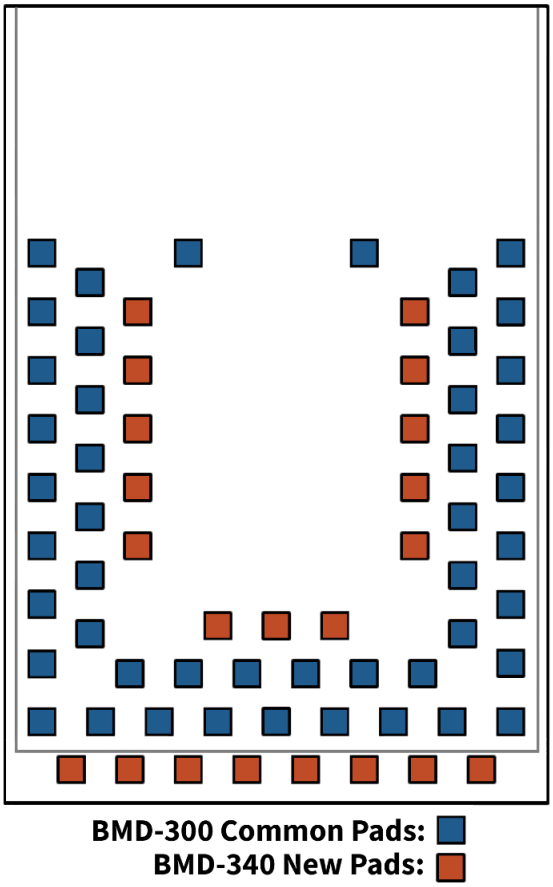

Figure 3 – BMD-340 and BMD-300/301/330 Footprint Comparison

The BMD-340 footprint has been designed to allow for backwards compatibility with the BMD-300, BMD-301, and BMD-330 modules with pins 1 through 47 of the BMD-340 directly mapping to the same pin numbers on the BMD-300/301/330. This allows BMD-300, BMD-301, and BMD-330 modules to be placed directly onto the BMD-340 footprint for easy migration and enabling tiered product design. Generally, all pin names and functions remain the same, except for some differences noted below. Pins 48 through 68 of the BMD-340 footprint are new pads used for new features that are not present on the BMD-300/301/330 modules, such as USB interface and additional GPIO and power connections.

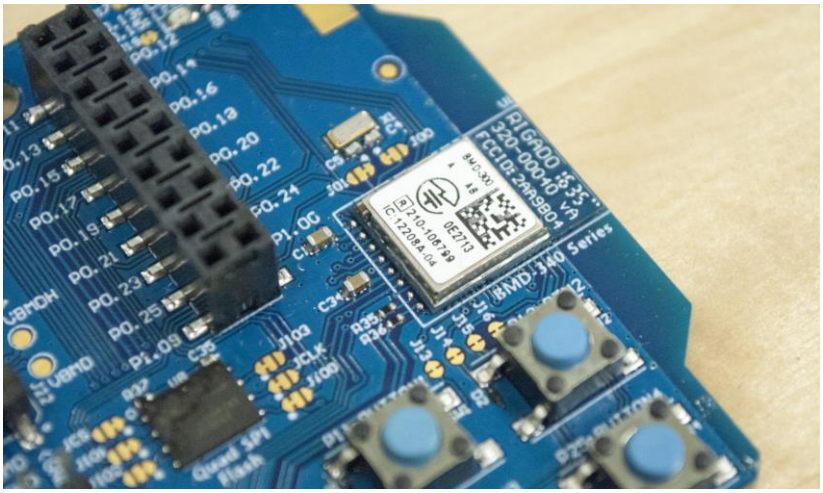

Figure 4 – BMD-300 Module Soldered to BMD-340 Footprint

6.3.1 BMD-300/301/330 to BMD-340 Pad Differences

Due to changes in the nRF52840 SoC used by the BMD-340, not all functions (such as SWO/TRACE signals) are found on the same pins as on the BMD-300/301/330. Particularly of note is the reset pin function which on the BMD-340 is now available on P0.18 instead of P0.21 as on the BMD-300/301. To maintain pin for pin compatibility of the reset signal, P0.18 and P0.21 have swapped pad locations on the BMD-340 footprint. These differences are detailed in Table 6 below:

Pin	BMD-300/301 Name	BMD-300/301 Function	BMD-340 Name	BMD-340 Function
39	**P0.21**	GPIO/$\overline{\text{RESET}}$	**P0.18**	GPIO/$\overline{\text{RESET}}$
38	P0.20	GPIO/**TRACECLK**	P0.20	GPIO
36	**P0.18**	GPIO/**TRACEDATA[0]/SWO**	**P0.21**	GPIO
34	P0.16	GPIO/**TRACEDATA[1]**	P0.16	GPIO
33	P0.15	GPIO/**TRACEDATA[2]**	P0.15	GPIO
32	P0.14	GPIO/**TRACEDATA[3]**	P0.14	GPIO
23	P0.07	GPIO	P0.07	GPIO/**TRACECLK**
56	N/A	N/A	P1.00	GPIO/**TRACEDATA[0]/SWO**
28	P0.12	GPIO	P0.12	GPIO/**TRACEDATA[1]**
27	P0.11	GPIO	P0.11	GPIO/**TRACEDATA[2]**
52	N/A	N/A	P1.09	GPIO/**TRACEDATA[3]**

Table 6 – BMD-300/301/330 to BMD-340 Pad Differences

6.3.2 BMD-300/301/330 to BMD-340 Design Migration

Existing designs incorporating the BMD-300, BMD-301, or BMD-330 module can be migrated over to the BMD-340 with the addition of a single footprint pad for VCCH (pin 65). This migration option is only suitable for applications that do not require the new USB interface, additional GPIO, or higher supply voltage functionality. The VCCH pad must be present and electrically connected to the same supply as VCC in order for the module to operate correctly. Vias underneath the BMD-340 should be tented to avoid shorts to unused module pads. Firmware written for the BMD-300/301/330 can generally be ported to the BMD-340 with minimal effort. See the Nordic Semiconductor SDK documentation for details.

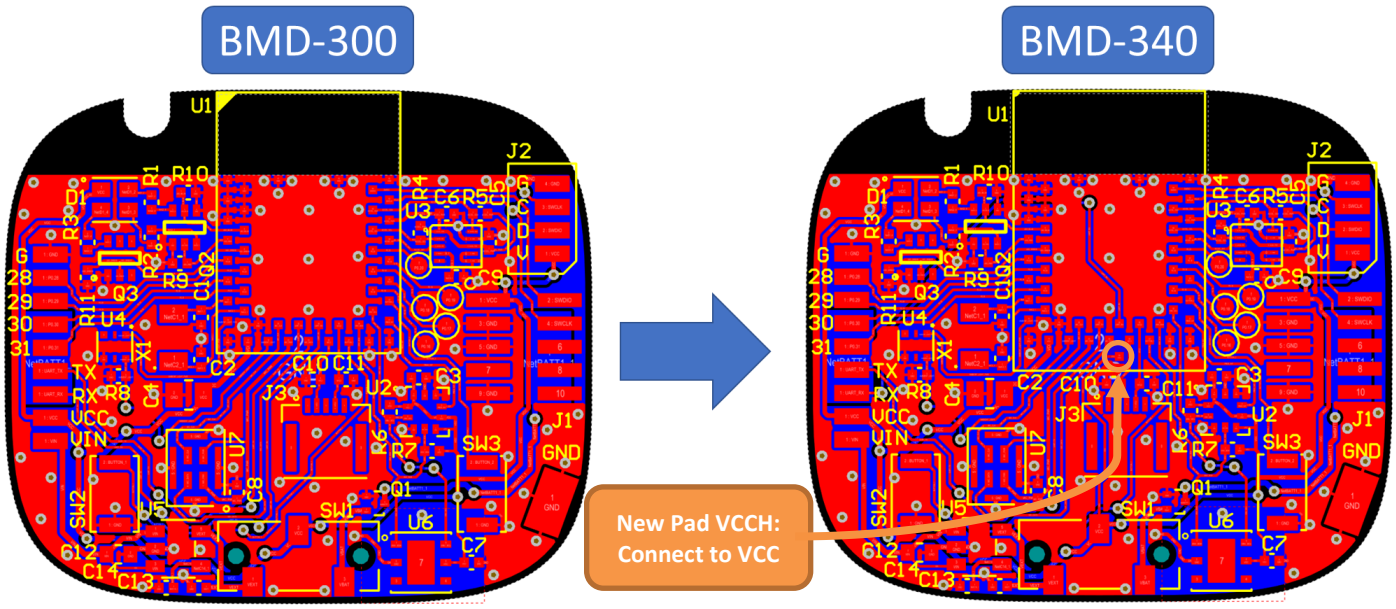

Figure 5 – BMD-300 to BMD-340 Migration Example

Using the BMD-340 minimal footprint, with only the additional VCCH pad added, allows BMD-300 designs to gain the following BMD-340 features with typically minor layout re-work:

- Bluetooth 5 long range modes
- IEEE 802.15.4 (Thread and Zigbee) connectivity
- Doubled Flash memory (1MB vs. 512kB)
- Quadrupled RAM (256kB vs. 64kb)
- ARM® TrustZone® Cryptocell 310 security co-processor

To take advantage of new hardware features, such as the additional UART and Quad SPI interface, the full BMD-340 footprint should be used. Designs that require the 5V DCDC converter, trace interface, USB interface, or the additional GPIO (P1.00-P1.15) must use the full BMD-340 footprint.

Note: Since the BMD-300/330 can be soldered to the full BMD-340 footprint, it is highly recommended that all new BMD-300 and BMD-340 projects use the full BMD-340 footprint. When migrating designs, the full BMD-340 footprint should be used whenever possible as it is better suited for use with mass production SMT processing.

6.4 BMD-340 Fanout Example

The following figure is a BMD-340 fanout example on a simple 2-layer PCB. This example is powered via VCCH from a USB connection. See Section 7.3 for details on power and DCDC operation.

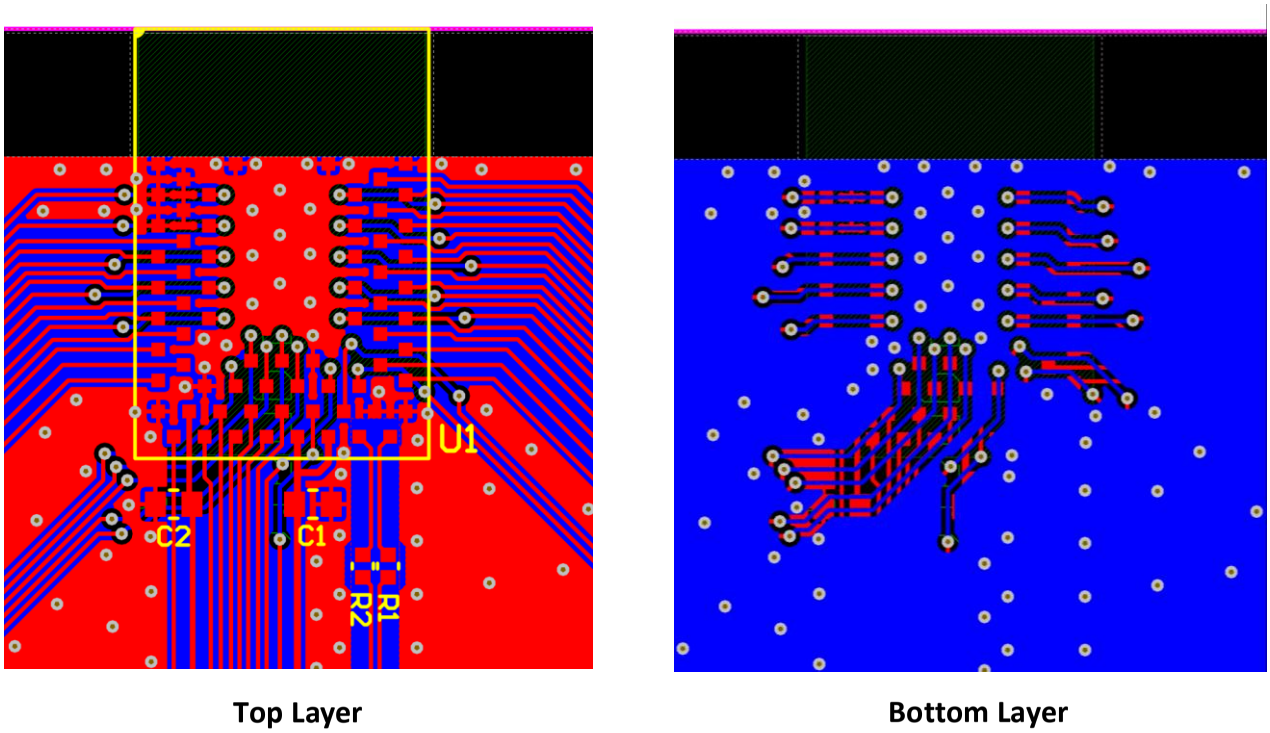

Figure 6 – BMD-340 2 Layer Fanout Example

7. Electrical Specifications

7.1 Absolute Maximum Ratings

Symbol	Parameter	Min.	Max.	Unit
V_{CC_MAX}	Voltage on VCC supply pin	-0.3	3.9	V
V_{CCH_MAX}	Voltage on VCCH supply pin	-0.3	5.8	V
V_{BUS_MAX}	Voltage on VBUS Supply pin	-0.3	5.8	V
V_{IO_MAX}	Voltage on GPIO pins ($V_{CC} > 3.6V$)	-0.3	3.9	V
V_{IO_MAX}	Voltage on GPIO pins ($V_{CC} \leq 3.6V$)	-0.3	$V_{CC} + 0.3V$	V
T_S	Storage Temperature Range	-40	125	°C

Table 7 – Absolute Maximum Ratings

7.2 Operating Conditions

Symbol	Parameter	Min.	Typ.	Max.	Unit
V_{CC_IN}	VCC operating supply voltage in	1.7	3.0	3.6	V
V_{CC_START}	VCC DCDC starting voltage	1.75	-	-	V
V_{CCH_HV}	VCCH operating supply voltage in	2.5	5.0	5.5	V
V_{BUS_IN}	VBUS operating supply voltage in	4.35	5.0	5.5	V
T_{R_VCC}	VCC Supply rise time (0V to 1.7V)	-	-	60	ms
T_{R_VCCH}	VCCH Supply rise time (0V to 3.7V)[1]	-	-	1	ms
T_A	Operating Ambient Temperature Range	-40	25	85	°C

Note 1: Applies when module is configured to use HV mode. When using LV mode T_{R_VCC} applies. See Nordic nRF52840 Rev 1 errata [202] for details on T_{R_VCCH} requirement.

Table 8 – Operating Conditions

7.3 Power and DCDC Configuration

Important Note Regarding REG0: Initial mass production silicon (Nordic Rev 1) for the nRF52840 includes some errata that affect the REG0 regulator. The REG0 DC-DC converter mode cannot be used reliably. The LDO mode of REG0 can be used in High Voltage mode but when applying power the input voltage must have a rise time of 1ms or less. Due to the rise time constraint and higher current consumption of LDO mode compared to DCDC, High Voltage mode should be considered non-functional for most applications and should not be used on ES2 and Revision A BMD-340 modules. See Nordic nRF52840 errata 197 and 202 for more details. These errata are expected to be corrected in future production silicon releases and subsequent revisions of the BMD-340 module. Contact Rigado for timing and details.

The BMD-340 has two internal regulator stages that each contain an LDO and DCDC regulator. The first regulator, REG0, is fed by the VCCH pin and can accept a source voltage of 2.5V to 5.5V. The output of REG0 is connected to the VCC pin and the input of the second regulator stage REG1. REG1 supplies power to the module core and can accept an input source voltage of 1.7V to 3.6V. Depending on how the VCC and VCCH pins are connected, the module will operate in one of two modes: Normal/Low Voltage (LV) or High Voltage (HV). The voltage present on the VCC pin is always the GPIO high logic level voltage, regardless of power mode.

To enter LV Mode, the same source voltage is applied to both the VCC and VCCH pins causing REG0 to automatically shut down leaving only the REG1 stage active. To enter HV, the source voltage is only applied to VCCH causing the VCC pin to become an output source supplied by REG0.

Mode	Pin	Name	Connection
Normal (LV)	17	VCC	1.7V to 3.6V source in
	65	VCCH	Same source as VCC
High Voltage (HV)	17	VCC	1.8V to 3.3V supply out
	65	VCCH	2.5V to 5.5V source in

Table 9 – Power Mode Pin Connections

Important: in both LV and HV mode, the GPIO logic level voltage is determined by the VCC pin. In HV mode, all external devices that are connected to the BMD-340's GPIO must either be powered by the module (from VCC) or use level translation.

REG0 can supply a maximum current of ~50mA for the module and external circuits in System On Mode and 1mA in System Off Mode. External circuits powered from VCC in HV mode should be limited to no more than 20mA to ensure stability.

7.3.1 USB Power

The USB interface on the BMD-340 can be used when the module is in either Normal (LV) or High Voltage (HV) mode. The BMD-340 USB PHY is powered by a dedicated, internal LDO regulator that is fed by the VBUS pin (66). This means that applying power to only the VBUS pin will not power the rest of the module. In order for the USB PHY to operate, VBUS must be externally powered.

7.3.2 Normal (LV) Power Mode Examples

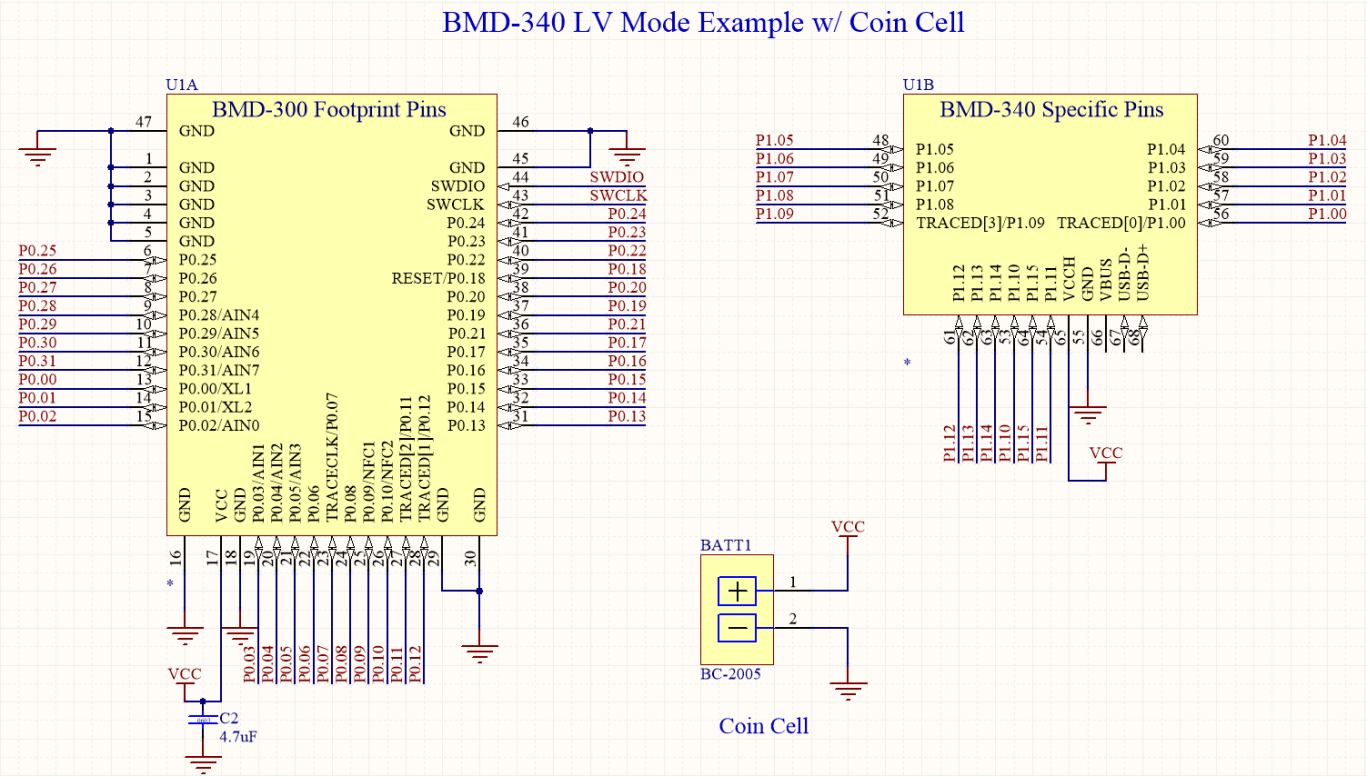

Figure 7 – LV Mode w/ Coin Cell Example

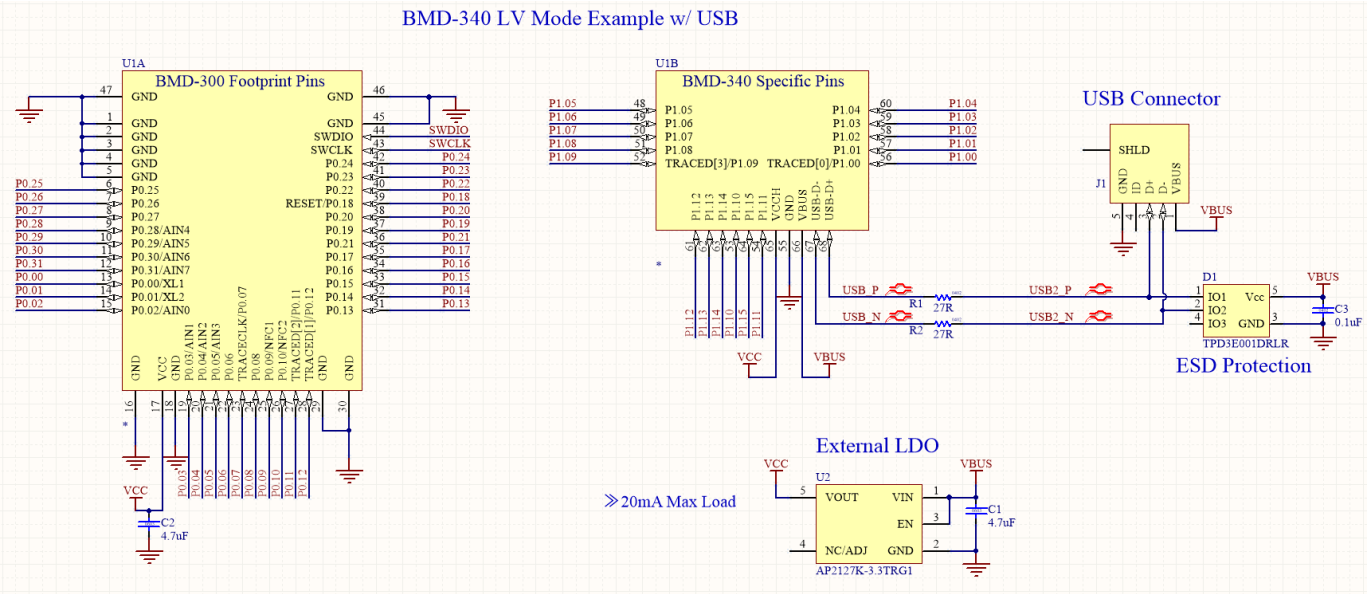

Figure 8 – LV Mode Example w/ USB and External Regulator

7.3.3 High Voltage (HV) Power Mode Examples

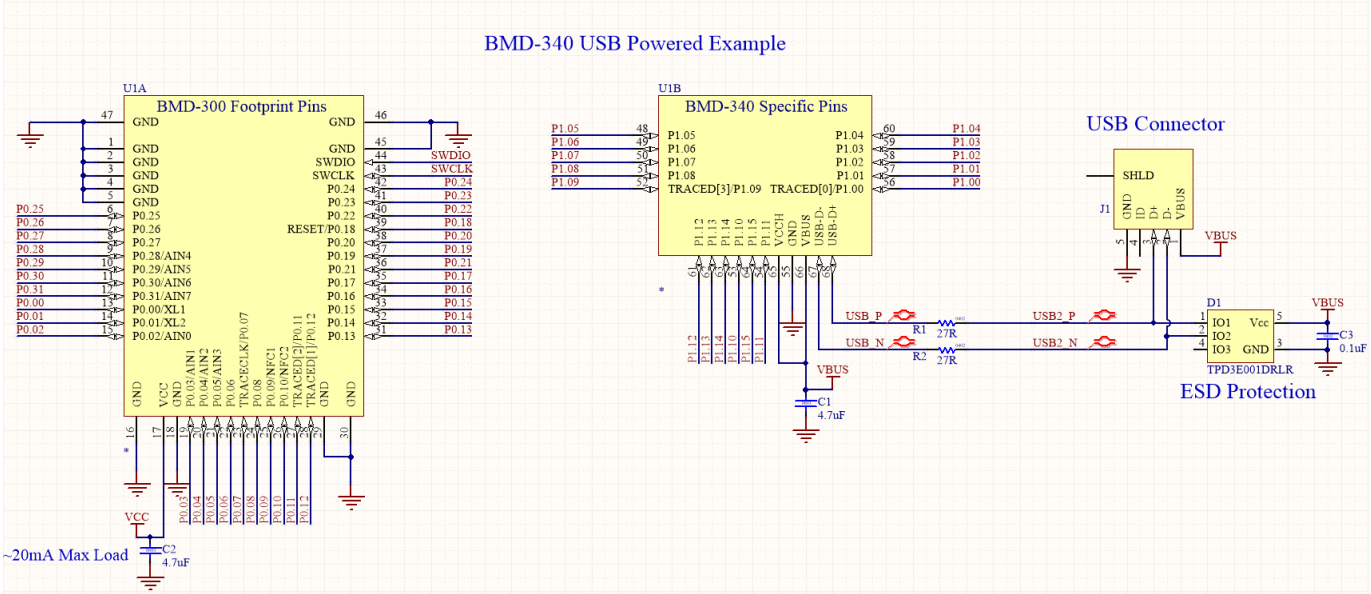

Figure 9 – USB Powered HV Mode Example

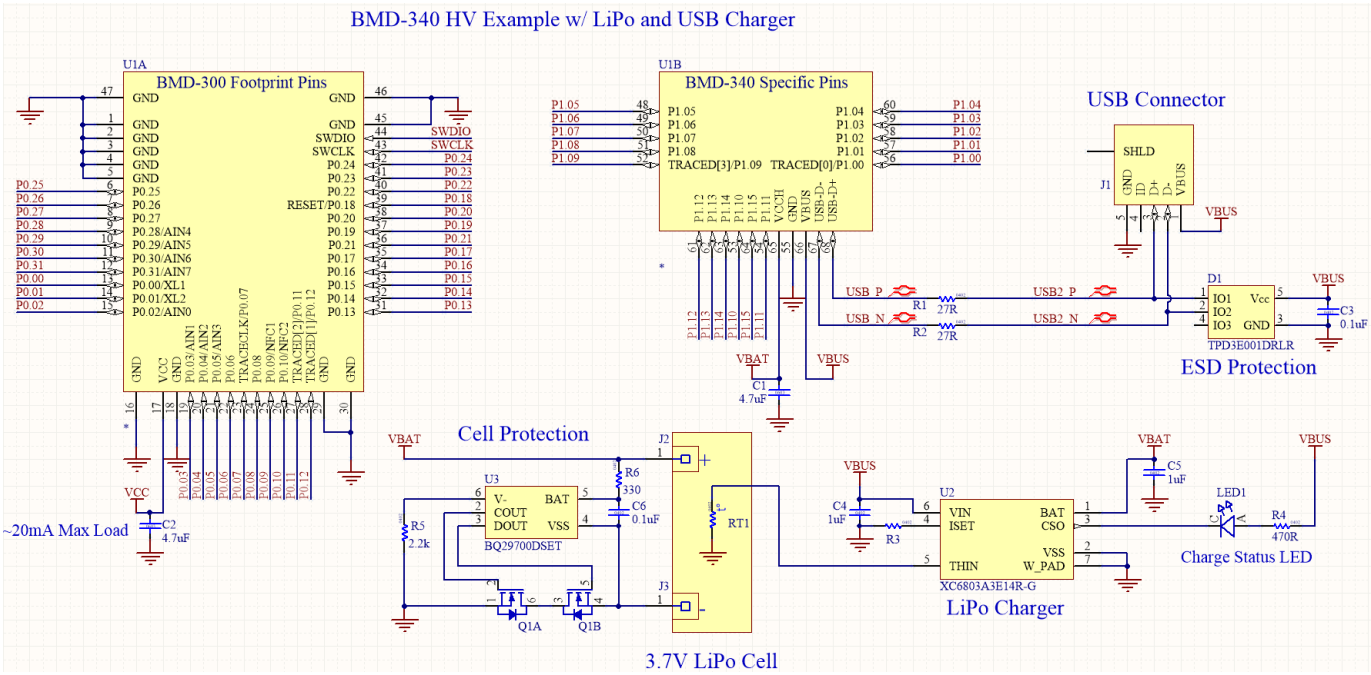

Figure 10 – LiPo Powered HV Example w/ USB Charger

Important: the LiPo circuit above is meant to be a generic example of how the BMD-340's power modes can be used. Great care must be taken when integrating Lithium-Ion batteries into a design. Protection circuits suitable for the type of battery used and the application must always be implemented.

7.4 General Purpose I/O

The general purpose I/O is organized as two ports enabling access and control of the 48 available GPIO pins. The first port allows access of P0.00 to P0.31, similar to the one port available on the BMD-300/301. The second port, new to the BMD-340, allows access to P1.00 to P1.15. Each GPIO can be accessed individually with the following user configurable features:

- Input/output direction
- Output drive strength
- Internal pull-up and pull-down resistors
- Wake-up from high or low level triggers on all pins
- Trigger interrupt on all pins
- All pins can be used by the PPI task/event system; the maximum number of pins that can be interfaced through the PPI at the same time is limited by the number of GPIOTE channels
- All pins can be individually configured to carry serial interface or quadrature demodulator signals

Symbol	Parameter	Min.	Typ.	Max.	Unit
V_{IH}	Input High Voltage	0.7 x V_{CC}	-	V_{CC}	V
V_{IL}	Input Low Voltage	V_{SS}	-	0.3 x V_{CC}	V
V_{OH}	Output High Voltage	V_{CC} – 0.4	-	V_{CC}	V
V_{OL}	Output Low Voltage	V_{SS}	-	V_{SS} + 0.4	V
R_{PU}	Pull-up Resistance	11	13	16	kΩ
R_{PD}	Pull-down Resistance	11	13	16	kΩ

Table 10 – GPIO

7.5 Module RESET

GPIO pin P0.18 may be used for a hardware reset. In order to utilize P0.18 as a hardware reset, the UICR registers PSELRESET[0] and PSELRESET[1] must be set alike, to the value of 0x7FFFFFD2. When P0.18 is programmed as $\overline{\text{RESET}}$, the internal pull-up is automatically enabled. Rigado and Nordic example applications and development kits program P0.18 as $\overline{\text{RESET}}$.

7.6 Debug & Programming

The BMD-340 supports the two pin Serial Wire Debug (SWD) interface and offers flexible and powerful mechanisms for non-intrusive debugging of program code. Breakpoints, single stepping, and instruction trace capture of code execution flow are part of this support.

The BMD-340 also supports ETM and ITM trace. Trace data from the ETM and the ITM is sent to an external debugger via a 4-bit wide parallel trace port. In addition to parallel trace, the TPIU supports serial trace via the Serial Wire Output (SWO) trace protocol.

7.7 Clocks

The BMD-340 requires two clocks, a high frequency clock and a low frequency clock.

The high frequency clock is provided on-module by a high-accuracy 32-MHz crystal as required by the nRF52840 for radio operation.

The low frequency clock can be provided internally by an RC oscillator or synthesized from the fast clock; or externally by a 32.768 kHz crystal. An external crystal provides the lowest power consumption and greatest accuracy. Using the internal RC oscillator with calibration provides acceptable performance for BLE applications at a reduced cost and slight increase in power consumption. Note: the ANT protocol requires the use of an external crystal.

32.768 kHz Crystal (LFXO)

Symbol	Parameter	Typ.	Max.	Unit
F_{NOM_LFXO}	Crystal frequency	32.768	-	kHz
$F_{TOL_LFXO_BLE}$	Frequency tolerance, BLE applications	-	±250	ppm
C_{L_LFXO}	Load Capacitance	-	12.5	pF
C_{0_LFXO}	Shunt Capacitance	-	2	pF
R_{S_LFXO}	Equivalent series resistance	-	100	kΩ
C_{pin}	Input Capacitance on XL1 & XL2 pads	4	-	pF

Table 11 – 32.768 kHz Crystal

32.768 kHz Oscillator Comparison

Symbol	Parameter	Min.	Typ.	Max.	Unit
I_{LFXO}	Current for 32.768kHz Crystal Oscillator	-	0.23	-	µA
I_{LFRC}	Current for 32.768kHz RC Oscillator	-	0.7	1	µA
I_{LFSYNT}	Current for 32.768kHz Synthesized Oscillator	-	100	-	µA
$f_{TOL_LFXO_BLE}$	Frequency Tolerance, 32.768kHz Crystal Oscillator (BLE Stack)[1]	-	-	±250	ppm
$f_{TOL_LFXO_ANT}$	Frequency Tolerance, 32.768kHz Crystal Oscillator (ANT Stack)[1]	-	-	±50	ppm
f_{TOL_LFRC}	Frequency Tolerance, 32.768kHz RC Oscillator	-	-	±2	%
$f_{TOL_CAL_LFRC}$	Frequency tolerance, 32.768kHz RC after calibration	-	-	±250	ppm
f_{TOL_LFSYNT}	Frequency Tolerance, 32.768kHz Synthesized Oscillator	-	-	±48	ppm
Note 1: $f_{TOL_LFXO_BLE}$ and $f_{TOL_LFXO_ANT}$ are the max allowed for BLE and ANT applications. Actual tolerance depends on the crystal used.					

Table 12 – 32.768 kHz Oscillator

8. Firmware

8.1 Factory Image

The BMD-340 module is not loaded with a factory firmware image. The unique Rigado MAC address is printed on the module label and is also programmed into the UICR.

8.2 SoftDevices

Nordic Semiconductor protocol stacks for Bluetooth and ANT are known as SoftDevices. SoftDevices are pre-compiled, pre-linked binary files. SoftDevices can be programmed in nRF52 series SoCs and are downloadable from the Nordic website. The BMD-340 with the nRF52840 SoC supports the S140 (BLE Central & Peripheral) SoftDevice.

8.2.1 S140

The S140 SoftDevice is a Bluetooth® low energy (BLE) Central and Peripheral protocol stack solution supporting up to twenty connections with an additional Observer and a Broadcaster role all running concurrently. The S140 SoftDevice integrates a BLE Controller and Host, and provides a full and flexible API for building Bluetooth Smart nRF52 System on Chip (SoC) solutions. The S140 Softdevice is an extension of the S132 V3.0 Softdevice adding support for Bluetooth 5.

Key Features

- *Bluetooth 5 compliant low energy single-mode protocol stack suitable for Bluetooth Smart products*
- *Concurrent Central, Observer, Peripheral, and Broadcaster roles with up to twenty concurrent connections along with one observer and one broadcaster*
  - *Configurable number of connections and bandwidth per connection to optimize memory and performance*
  - *Configurable attribute table size*
  - *Custom UUID support*
  - *Link layer*
  - *LL Privacy*
  - *LE Data Packet Length Extension*
  - *L2CAP, ATT, and SM protocols*
  - *LE Secure Connections pairing model*
  - *GATT and GAP APIs*
  - *GATT Client and Server*
  - *Configurable ATT MTU*
- *Complementary nRF5 SDK including Bluetooth profiles and example applications*
- *Master Boot Record for over-the-air device firmware update*
  - *SoftDevice, application, and bootloader can be updated separately*
- *Memory isolation between the application and the protocol stack for robustness and security*
- *Thread-safe supervisor-call based API*
- *Asynchronous, event-driven behavior*
- *No RTOS dependency*
  - *Any RTOS can be used*
- *No link-time dependencies*
  - *Standard ARM® Cortex®-M4 project configuration for application development*
- *Support for concurrent and non-concurrent multiprotocol operation*
  - *Concurrent with the Bluetooth stack using Radio Timeslot API*
  - *Alternate protocol stack in application space*

8.3 IEEE 802.15.4 (Thread and Zigbee)

IEEE 802.15.4 based protocols, such as Thread and Zigbee, on the BMD-340 are not implemented using a Softdevice. Nordic Semiconductor provides an IEEE 802.15.4 compliant MAC stack which does not require a Softdevice to be loaded to operate. Nordic Semiconductor also provides pre-compiled Thread and Zigbee stacks. See developer.nordicsemi.com/nRF5_SDK/doc/ for more information on developing applications that utilize IEEE 802.15.4. Both allow for concurrent operation with BLE SoftDevices.

8.4 MAC Address Info

The BMD-340 modules comes preprogrammed with a unique MAC address from the factory. The MAC address is also printed on a 2D barcode on the top of the module.

Figure 11 – BMD-340 MAC Address on Label

The 6-byte BLE Radio MAC address is stored in the nRF52840 UICR at NRF_UICR_BASE+0x80 LSB first. Please read the MAC Address Provisioning application note if you are not using the built in bootloader to avoid erasing/overwriting the MAC address during programming. **Important:** If full memory protection is enabled, the UICR cannot be read via the SWD interface. If performing a full-erase, the MAC can then only be recovered from the 2D barcode and human-readable text.

UICR Register:
NRF_UICR + 0x80 (0x10001080): MAC_Addr [0] (0xZZ)
NRF_UICR + 0x81 (0x10001081): MAC_Addr [1] (0xYY)
NRF_UICR + 0x82 (0x10001082): MAC_Addr [2] (0xXX)
NRF_UICR + 0x83 (0x10001083): MAC_Addr [3] (0x93)
NRF_UICR + 0x84 (0x10001084): MAC_Addr [4] (0x54)
NRF_UICR + 0x85 (0x10001085): MAC_Addr [5] (0x94)

9. Mechanical Data

9.1 Mechanical Dimensions

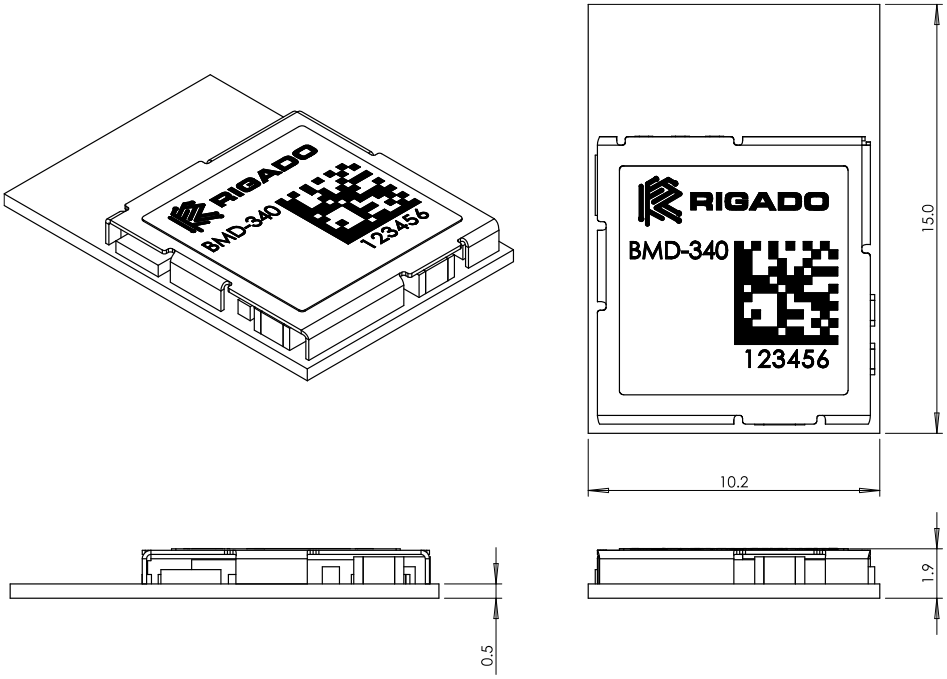

Figure 12 – BMD-340 Module Dimensions

(All dimensions are in mm)

9.2 Recommended PCB Land Pads

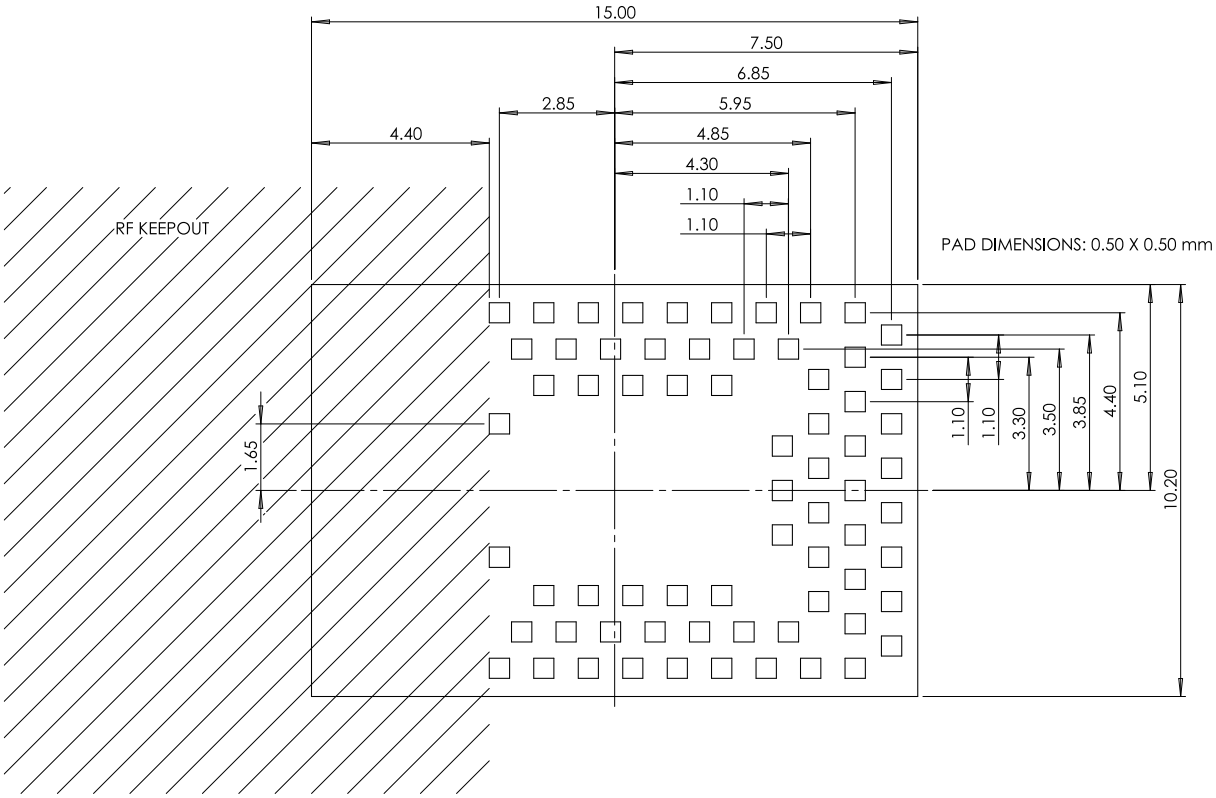

Figure 13 – BMD-340/301 Dimensions (Top View)

(All dimensions are in mm)

10. Module Marking

Figure 14 – BMD-340 Module Marking

11. RF Design Notes

11.1 Recommended RF Layout & Ground Plane

The integrated antenna requires a suitable ground plane to radiate effectively.
The area under and extending out from the antenna portion of the module should be kept clear of copper and other metal. The module should be placed at the edge of the PCB with the antenna edge facing out. Reducing the ground plane from that shown in Figure 15 will reduce the effective radiated power.

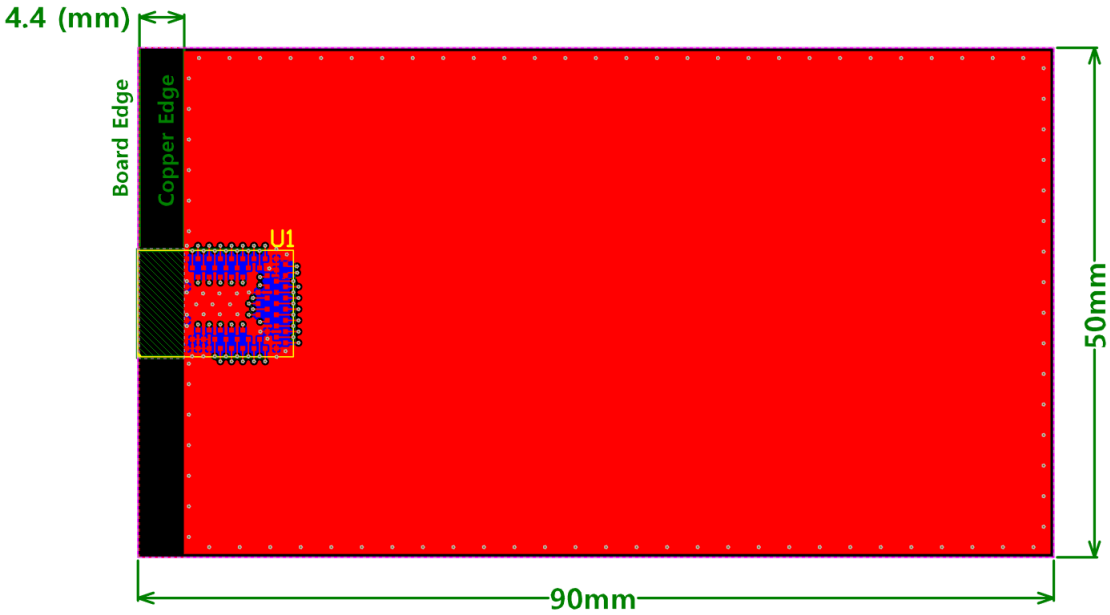

Figure 15 – BMD-340 RF Example based on EVAL Board

11.2 Mechanical Enclosure

Care should be taken when designing and placing the module into an enclosure. Metal should be kept clear from the antenna area, both above and below. Any metal around the module can negatively impact RF performance.

The module is designed and tuned for the antenna and RF components to be in free air. Any potting, epoxy fill, plastic over-molding, or conformal coating can negatively impact RF performance and must be evaluated by the customer.

11.3 Antenna Patterns

Antenna patterns are based on the BMD-340 Evaluation Kit with a ground plane size of 109mm x 56mm. X-Y-Z orientation is shown in Figure 16:

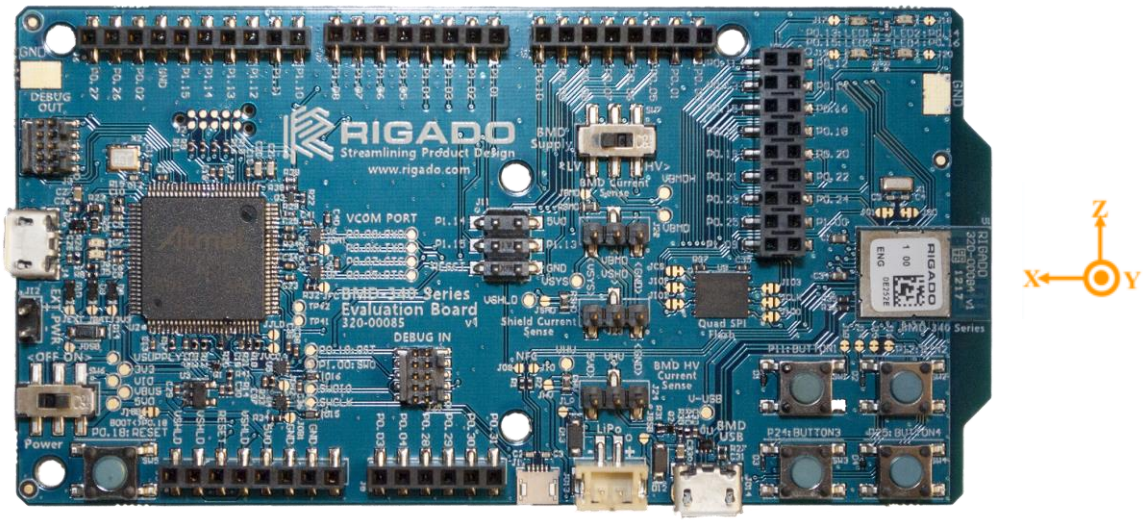

Figure 16 – X-Y-Z Antenna Orientation

11.3.1.1 X-Z Plane

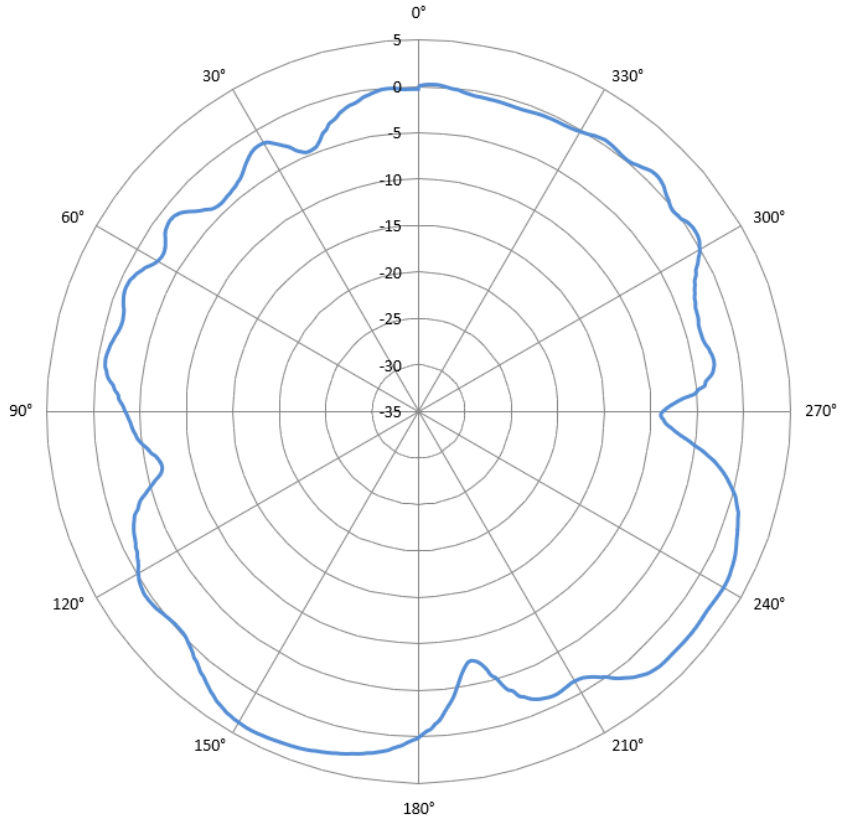

11.3.1.2 Y-Z Plane

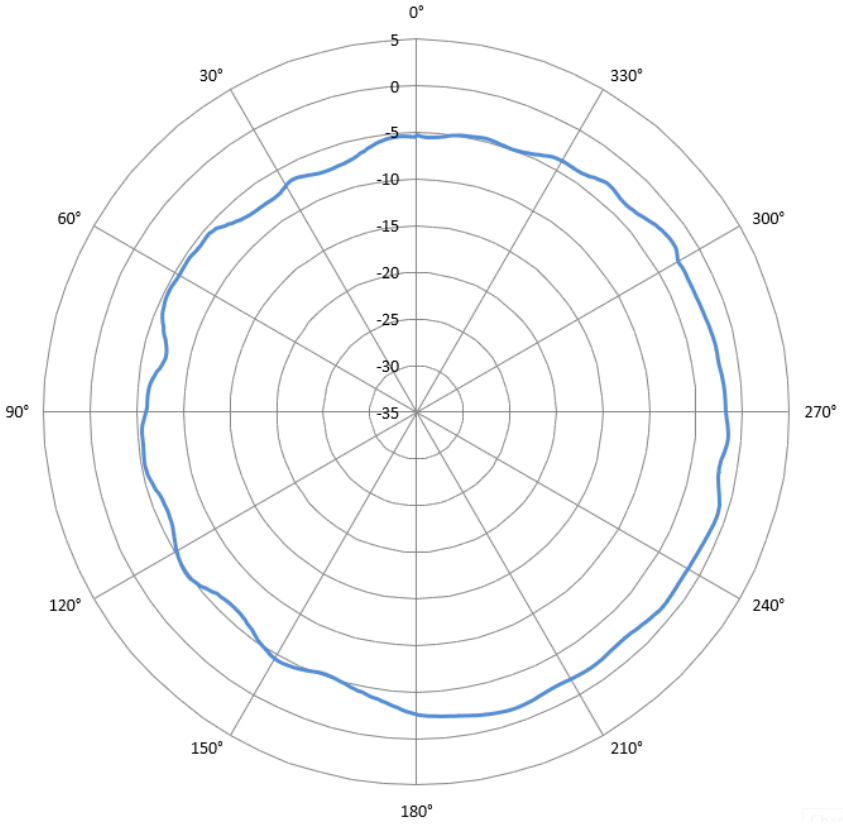

11.3.1.3 X-Y Plane

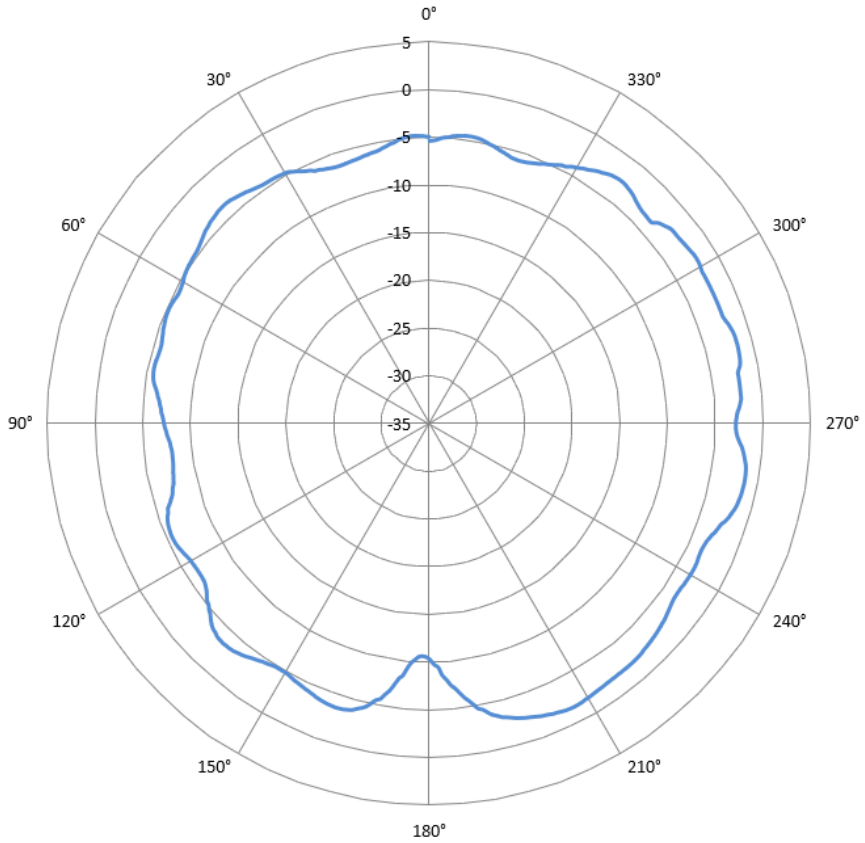

12. Evaluation Boards

Rigado has developed full featured evaluation boards that provide a complete I/O pin out to headers, on-board programming and debug, 32.768 kHz crystal, power & virtual COM port over USB, BMD-340 USB connector, 64Mb quad SPI Flash, 4 user LEDs, and 4 user buttons. The evaluation boards also provide the option to be powered from a CR2032 coin cell battery or a LiPo battery through a JST-PH connecter, and have current sense resistors and headers to allow for convenient current measurements. Arduino Mega style headers are provided for easy prototyping of additional functions. The evaluation boards also support programming off-board BMD-300/301 and BMD-340 Series modules.

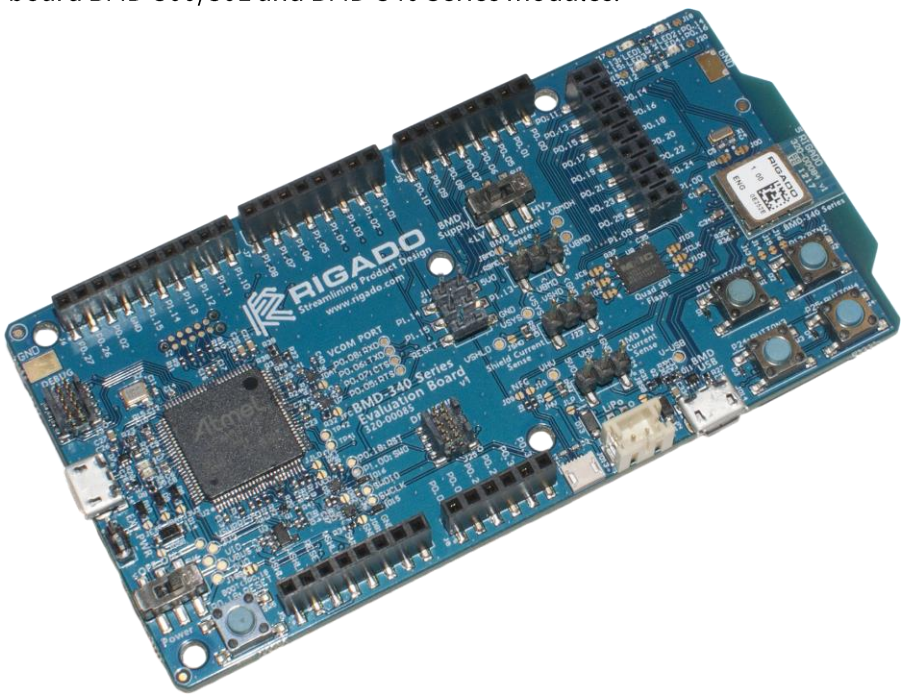

Figure 17 – BMD-340 Evaluation Board

13. Edge Connectivity Solutions

Rigado offers secure and scalable device-to-cloud connectivity solutions with edge computing power that are designed to perfectly interface with Rigado modules and streamline Commercial IoT deployments. The Rigado Cascade platform provides IoT teams with secure edge computing, a containerized application platform and a wide variety of wireless connectivity options – all in a simple 'Edge-as-a-Service' monthly subscription.

Visit www.rigado.com/iot-edge-as-a-service/ or contact Rigado at info@rigado.com for more details.

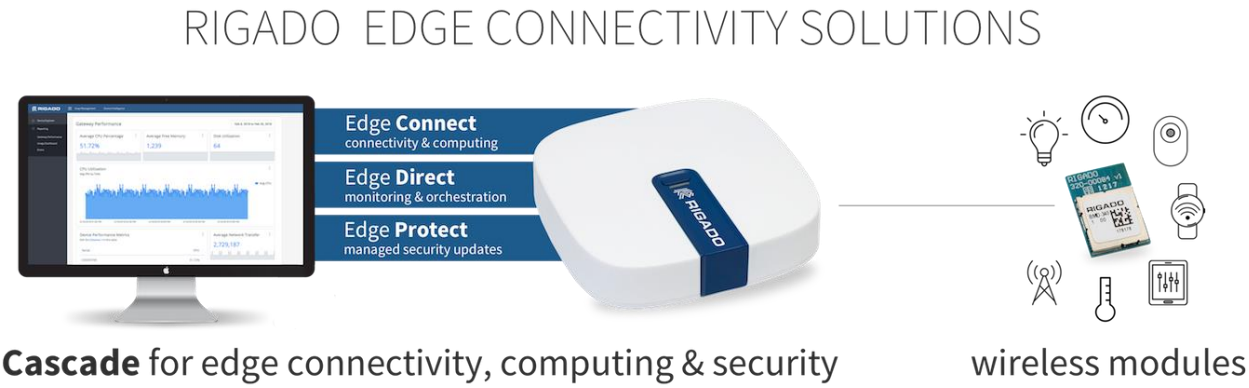

14. Bluetooth Qualification

The BMD-340 module is qualified as a Bluetooth Component (tested) for RF-PHY. This allows customers to use different SoftDevices that have been qualified by Nordic without the need to complete additional RF-PHY testing. To achieve Bluetooth End Product qualification, the Rigado RF-PHY QDID can be combined with Nordic QDIDs for the SoftDevice used when filing on the Bluetooth SIG website. The only testing required is for the Bluetooth profiles supported by the customer's product. Products with only custom profiles do not require any additional testing.

- BMD-340: RF-PHY Component(Tested) Declaration ID D040773 / QDID 95452

15. Regulatory Statements

15.1 FCC Statement:

This device has been tested and found to comply with part 15 of the FCC rules. These limits are designed to provide reasonable protection against harmful interference in a residential installation. This equipment generates, uses and can radiate radio frequency energy and, if not installed and used in accordance with the instructions, may cause harmful interference to radio communications. However, there is no guarantee that interference will not occur in a particular installation. If this equipment does cause harmful interference to radio or television reception, which can be determined by turning the equipment off and on, the user is encouraged to try to correct the interference by one or more of the following measures:

- Reorient or relocate the receiving antenna.
- Increase the separation between the equipment and the receiver
- Connect the equipment into an outlet on a circuit different from that to which the receiver is connected.
- Consult the dealer or an experienced radio/TV technician for help.

Operation is subjected to the following two conditions: (1) This device may no cause harmful interference, and (2) this device must accept any interference received, including interference that may cause undesired operation. Note: Modification to this product will void the user's authority to operate this equipment.

Note: Modification to this product will void the users' authority to operate this equipment.

15.2 FCC Important Notes

(1) FCC Radiation Exposure Statement

This equipment complies with FCC RF radiation exposure limits set forth for an uncontrolled environment. This transmitter must not be co-located or operating in conjunction with any other antenna or transmitter. This equipment complies with Part 15 of the FCC Rules. Operation is subject the following two conditions:

(1) This device may not cause harmful interference, and
(2) This device must accept any interference received, including interference that may cause undesired operation.

The devices must be installed and used in strict accordance with the manufacturer's instructions as described in this document.

Caution!

The manufacturer is not responsible for any radio or TV interference caused by unauthorized modifications to this equipment. Such modification could void the user authority to operate the equipment.

(2) Co-location Warning:

This device and its antenna(s) must not be co-located or operating in conjunction with any other transmitter antenna.

(3) OEM integration instructions：

This device is intended only for OEM integrators under the following conditions:

The antenna and transmitter must not be co-located with any other transmitter or antenna. The module shall be only used with the integral antenna(s) that has been originally tested and certified with this module.

As long as the two (2) conditions above are met, further transmitter testing will not be required. However, the OEM integrator is still responsible for testing their end-product for any additional compliance requirements with this module installed (for example, digital device emission, PC peripheral requirements, etc.)

In the event that these conditions cannot be met (for example certain laptop configuration or co-location with another transmitter), then the FCC authorization for this module in combination with the host equipment is no longer considered valid and the FCC ID of the module cannot be used on the final product. In these and circumstance, the OEM integrator will be responsible for re-evaluating the end product (including the transmitter) and obtaining a separate FCC authorization.

Caution!

The OEM is still responsible for verifying end product compliance with FCC Part 15, subpart B limits for unintentional radiators through an accredited test facility.

(4) End product labeling：

The final end product must be labeled in a visible area with the following:

- BMD-340: "Contains **FCC ID: 2AA9B10**"
- Any similar wording that expresses the same meaning may be used.

The FCC Statement below should also be included on the label. When not possible, the FCC Statement should be included in the User Manual of the host device.

> "This device complies with part 15 of the FCC rules.
> Operation is subject to the following two conditions. (1) This device may not cause harmful interference. (2) This device must accept any interference received, including interference that may cause undesired operation."

(5) Information regarding the end user manual：

The OEM integrator has to be aware not to provide information to the end user regarding how to install or remove this RF module in the user's manual of the end product which integrates this module. The end user manual shall include all required regulatory information/warning as show in this manual (Section 15.2(4)).

15.3 IC Statement:

This device complies with Industry Canada license-exempt RSS standard(s). Operation is subject to the following two conditions: (1) this device may not cause interference, and (2) this device must accept any interference, including interference that may cause undesired operation of the device.

Le présent appareil est conforme aux CNR d'Industrie Canada applicables aux appareils radio exempts de licence. L'exploitation est autorisée aux deux conditions suivantes : (1) l'appareil ne doit pas produire de brouillage, et (2) l'utilisateur de l'appareil doit accepter tout brouillage radioélectrique subi, même si le brouillage est susceptible d'en compromettre le fonctionnement.

RF exposure warning: The equipment complies with RF exposure limits set forth for an uncontrolled environment. The antenna(s) used for this transmitter must not be co-located or operating in conjunction with any other antenna or transmitter.

Avertissement d'exposition RF: L'équipement est conforme aux limites d'exposition aux RF établies pour un incontrôlés environnement. L'antenne (s) utilisée pour ce transmetteur ne doit pas être co-localisés ou onctionner en conjonction avec toute autre antenne ou transmetteur .

15.4 IC Important Notes

1. The OEM integrator must be aware not to provide information to the end user regarding how to install or remove this RF module in the user manual of the end product.
The user manual which is provided by OEM integrators for end users must include the following information in a prominent location.

2. To comply with IC RF exposure compliance requirements, the antenna used for this transmitter must not be co-located or operating in conjunction with any other antenna or transmitter, except in accordance with IC multi-transmitter product procedures.

3. The final system integrator must ensure there is no instruction provided in the user manual or customer documentation indicating how to install or remove the transmitter module except such device has implemented two-ways authentication between module and the host system.

4. The host device shall be properly labelled to identify the module within the host device. The end product must be labeled in a visible area with the following:

- BMD-340: “Contains **IC: 12208A-10** “

Any similar wording that expresses the same meaning may be used.

The IC Statement below should also be included on the label. When not possible, the IC Statement should be included in the User Manual of the host device.

> “This device complies with Industry Canada license-exempt RSS standard(s). Operation is subject to the following two conditions: (1) this device may not cause interference, and (2) this device must accept any interference, including interference that may cause undesired operation of the device.

Le présent appareil est conforme aux CNR d'Industrie Canada applicables aux appareils radio exempts de licence. L'exploitation est autorisée aux deux conditions suivantes : (1) l'appareil ne doit pas produire de brouillage, et (2) l'utilisateur de l'appareil doit accepter tout brouillage radioélectrique subi, même si le brouillage est susceptible d'en compromettre le onctionnement.”

15.5 CE Regulatory

The BMD-340 module is being tested and is expected to be compliant against the following standards. OEM integrators should consult with qualified test house to verify all regulatory requirements have been met for their complete device.

EU - Radio Equipment Directive 2014/53/EU

- ETSI EN 300 328 V 2.1.1
- ETSI EN 301 489-1 V2.1.1
- ETSI EN 301 489-17 V3.1.1

Declarations of Conformity and supporting test reports are available at www.rigado.com.

15.6 Australia / New Zealand

The BMD-340 module is tested to comply with the AS/NZS 4268 :2012+AMDT 1:2013, Radio equipment and systems – Short range devices – Limits and methods of measurement. The report may be downloaded from www.rigado.com, and may be used as evidence in obtaining permission to use the RCM.
Information on registration as a Responsible Party, license and labeling requirements may be found at the following websites:
Australia: http://www.acma.gov.au/theACMA/radiocommunications-short-range-devices-standard-2004
New Zealand: http://www.rsm.govt.nz/compliance

16. Solder Reflow Temperature-Time Profile

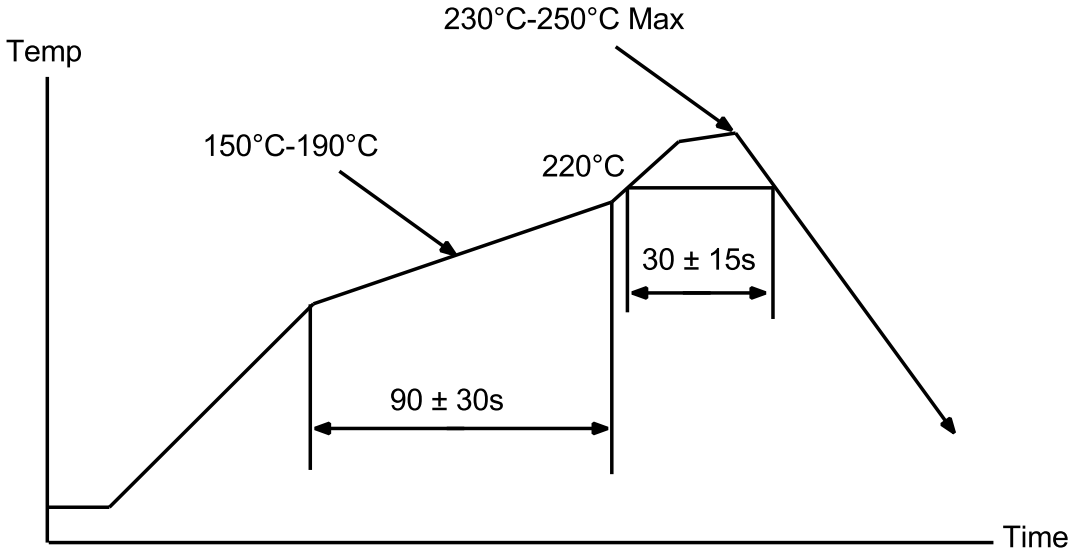

Figure 18 – Reflow Profile for Lead Free Solder

16.1 Moisture Sensitivity Level

The BMD-340 is rated for MSL 3, 168-hour floor life after opening.

17. Packaging and Labeling

17.1 Carrier Tape Dimensions

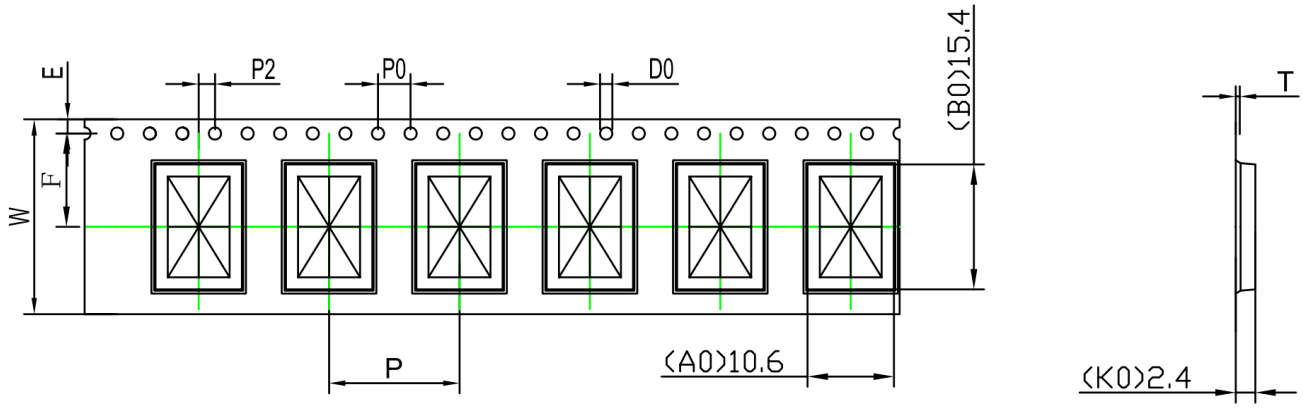

ITEM	W	A_0	B_0	K_0	K_1	P	F	E	D_0	D_1	P_0	P_2	T
DIM	$24.0^{+0.30}_{-0.30}$	$10.60^{+0.10}_{-0.10}$	$15.4^{+0.10}_{-0.10}$	$2.40^{+0.10}_{-0.10}$	$0.00^{+0.00}_{-0.00}$	$16.0^{+0.10}_{-0.10}$	$11.5^{+0.10}_{-0.10}$	$1.75^{+0.10}_{-0.10}$	$1.50^{+0.10}_{-0.00}$	$0.00^{+0.10}_{-0.00}$	$4.00^{+0.10}_{-0.10}$	$2.00^{+0.10}_{-0.10}$	$0.30^{+0.05}_{-0.05}$
ALTERNATE													

Figure 19 - BMD-340 Tape Dimensions

17.2 Reel Packaging

Modules come on 330mm reels loaded with 1000 modules. Each reel is placed in an antistatic bag with a desiccant pack and humidity card and placed in a 340x350x65mm box. On the outside of the bag an antistatic warning and reel label are adhered.

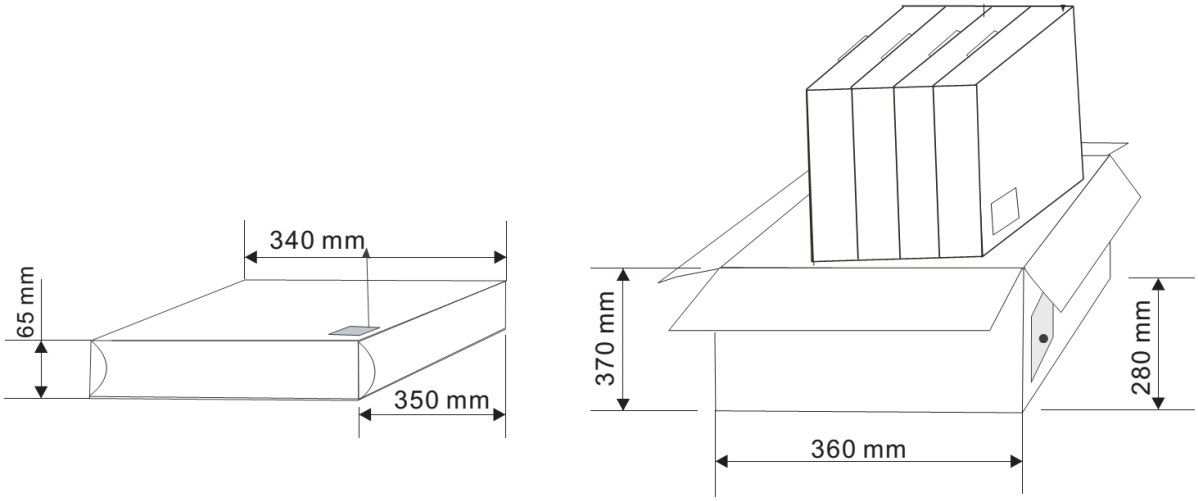

Figure 20 – Reel Packaging

17.3 Packaging Label

Figure 21 – Packaging Label

18. Cautions

1) The guidelines of this document should be followed in order to assure proper performance of the module.
2) This product is for use in office, business, and residential applications, but not medical devices.
3) This module may short-circuit. If a short circuit can result in serious damage or injury then failsafe precautions should be used. This could be accomplished by redundant systems and protection circuits.
4) Supply voltage to the module should not be higher than the specified inputs or reversed. Additionally, it should not contain noise, spikes, or AC ripple voltage.
5) Avoid use with other high frequency circuits.
6) Use methods to eliminate static electricity when working with the module as it can damage the components.
7) Contact with wires, the enclosure, or any other objects should be avoided.
8) Refer to the recommended pattern when designing for this module.
9) If hand soldering is used, be sure to use the precautions outlined in this document.
10) This module should be kept away from heat, both during storage and after installation.
11) Do not drop or physically shock the module.
12) Do not damage the interface surfaces of the module.
13) The module should not be mechanically stressed at any time (storage, handling, installation).
14) Do not store or expose this module to:
    - Humid or salty air conditions
    - High concentrations of corrosive gasses.
    - Long durations of direct sunlight.
    - Temperatures lower than -40°C or higher than 125°C.

19. Life Support Policy

This product is not designed to be used in a life support device or system, or in applications where there is potential for a failure or malfunction to, directly or indirectly, cause significant injury. By using this product in an application that poses these risks, such as described above, the customer is agreeing to indemnify Rigado for any damages that result.

20. Document History

Revision	Date	Changes / Notes
0.8	7/5/2017	Initial Release
1.0	5/21/2018	Production Release. Updated power specifications. Added details on REG0 related silicon errata. Updated certification information. Added Zigbee information. Removed outdated factory firmware information.
1.1	7/24/2018	Added Antenna data and updated certification information.

21. Related Documents

Rigado Documents:

- BMD-340 Product Brief

Nordic Documents:

Visit infocenter.nordicsemi.com for a comprehensive library of Nordic technical documentation.

- nRF52840 – nRF52840 Product Specification
- nRF52840 – nRF52840 Rev 1 Production Silicon Errata
- S140-SDS – nRF52840 S140 Soft Device Specification
- 802.15.4 – nRF5 SDK for Thread and Zigbee