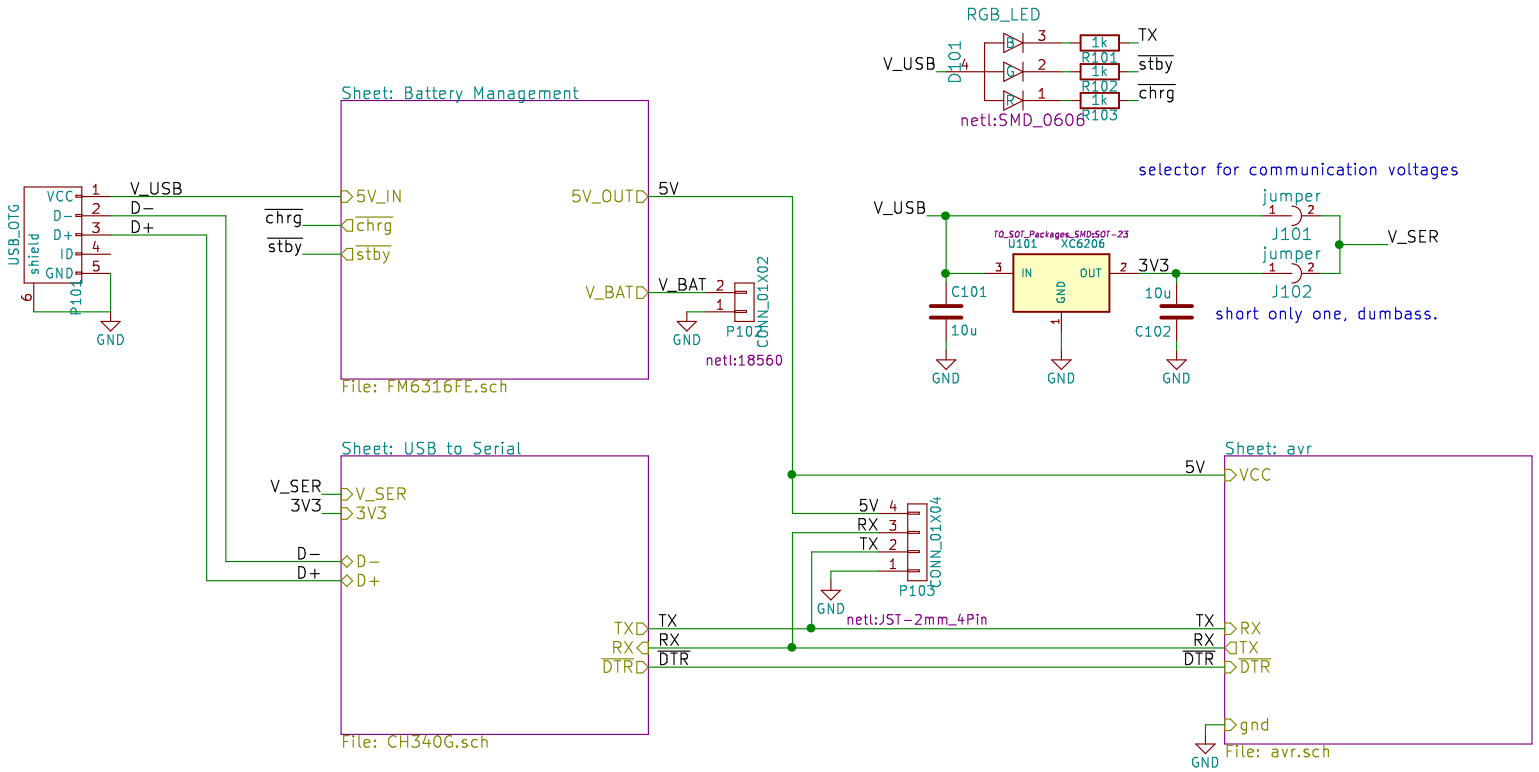

Sheet: /
File: serial−charger.sch

Title:

Size: A4	Date:	Rev:
KiCad E.D.A. kicad 4.0.2+dfsg1−stable		Id: 1/4

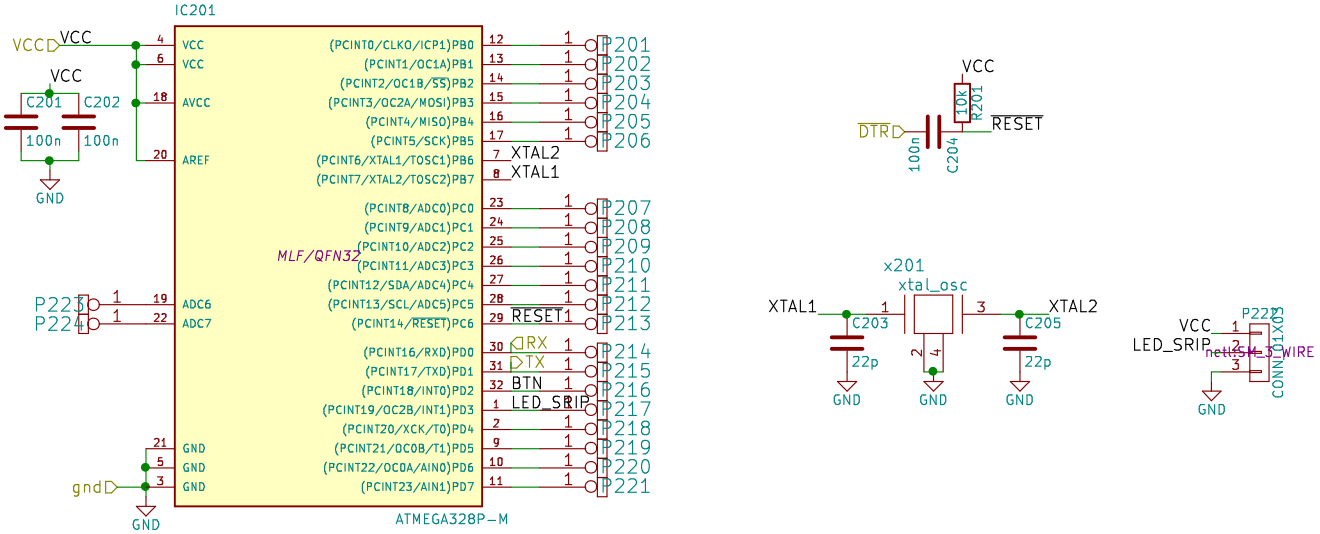

Sheet: /avr/
File: avr.sch

Title:

Size: A4	Date:	Rev:
KiCad E.D.A. kicad 4.0.2+dfsg1-stable		Id: 2/4

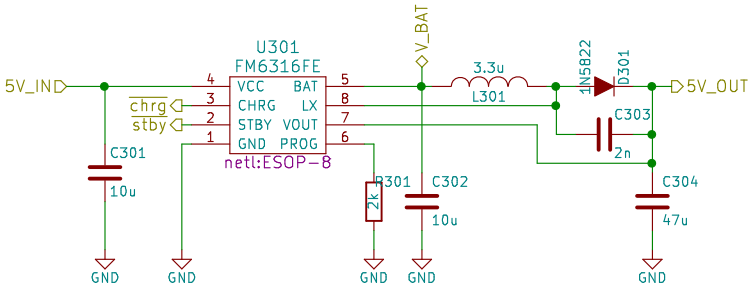

Sheet: /Battery Management/
File: FM6316FE.sch

Title:

Size: A4	Date:	Rev:
KiCad E.D.A. kicad 4.0.2+dfsg1-stable		Id: 3/4

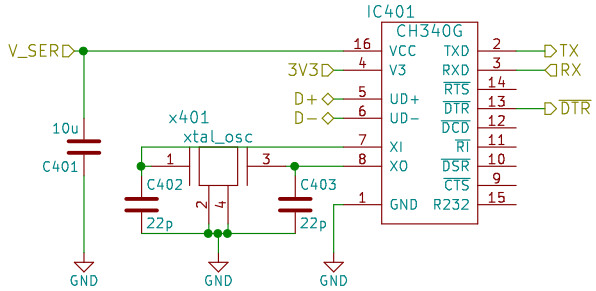

Sheet: /USB to Serial/
File: CH340G.sch

Title:

Size: A4	Date:	Rev:
KiCad E.D.A. kicad 4.0.2+dfsg1−stable		Id: 4/4