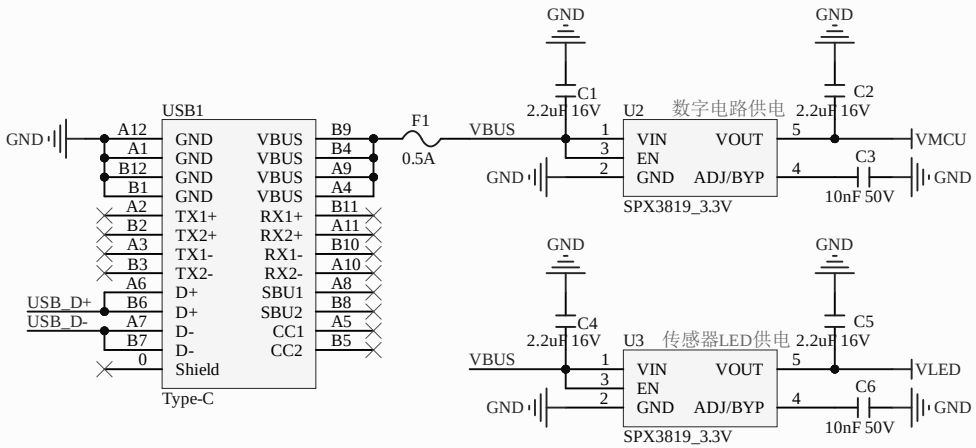

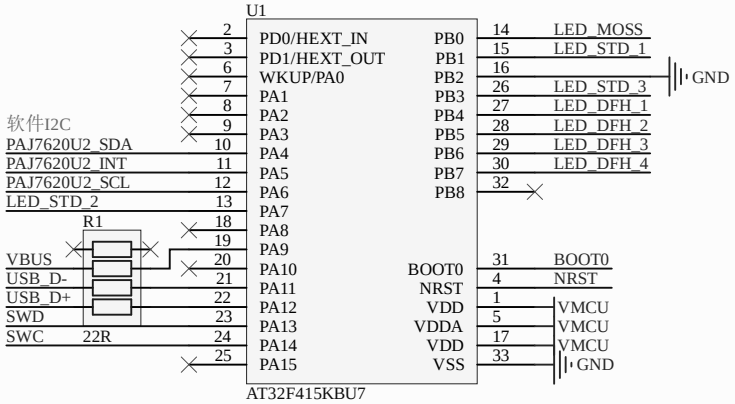

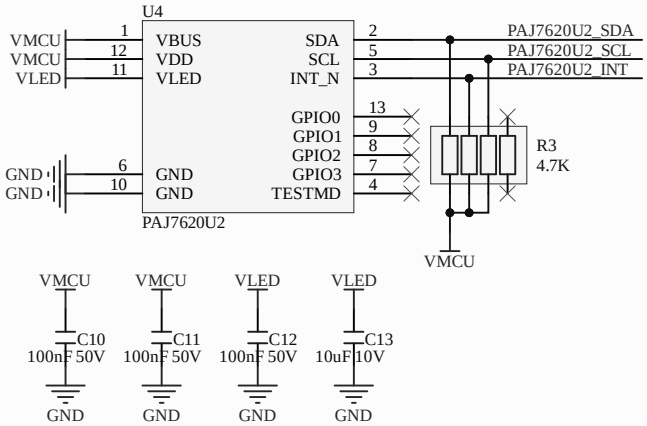

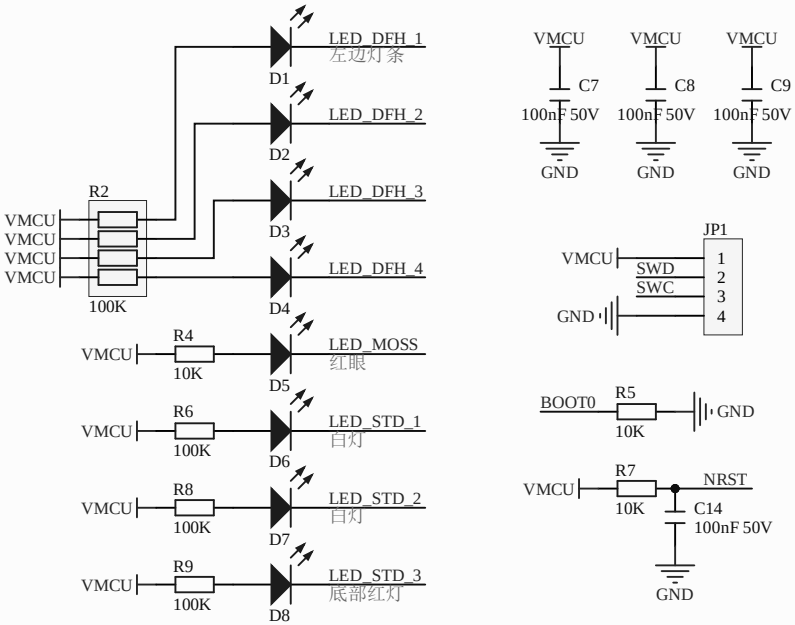

Title		
Size A4	Number	Revision
Date: 2/10/2023		Sheet of
File: D:\NETUBE\..\Sheet1.SchDoc		Drawn By: