REVISION HISTORY			
NUMBER	DATE	DESCRIPTION	NAME
2.8.4.1541 2.8.4.1572-1572+g69e282b3b+v2.8.5+rc5	2026-03-15	Current release snapshot of Network UPS Tools (NUT).	
2.8.4	2025-08-07	Fixed a few regressions introduced by release v2.8.3. Some changes to docs and recipes, especially for parallel builds. Updated NUT SEMVER definition some more. Some rounds of code-hardening project. Numerous driver updates, some new ones introduced.	JK
2.8.3	2025-04-07	Some changes to docs and recipes, libupsclient API and functionality. Updated NUT SEMVER definition and added scripting around it. Groundwork for vendor-defined status and INSTCMD buzzwords like "ECO". Fixed some regressions and added improvements for certain new device series.	JK
2.8.2	2024-04-01	Some changes to docs and recipes, libnutscan API and functionality. Added nutconf (library and tool). Fixed some regressions and added improvements for certain new device series.	JK
2.8.1	2023-10-31	Some changes to API, docs and recipes, in particular to simplify local builds and tests (e.g. to help end-users check if current NUT codebase trunk has already fixed an issue they see with a packaged installation). Revived NUT for Windows effort, further improved other OS integrations. NUT became reference for "UPS management protocol", Informational RFC 9271. Documentation files refactored to ease maintenance. More drivers and new driver categories introduced.	JK

REVISION HISTORY			
NUMBER	DATE	DESCRIPTION	NAME
2.8.0	2022-04-26	Change of maintainer. Many changes to API, docs (both style and content), and recipes, with a stress on non-regression test-ability, run-time debug-ability, general codebase maintainability, as well as OS integrations (notably nut-driver-enumerator for systemd and SMF service instance maintenance). Added a lot in area of CI support and documented pre-requisite package lists for numerous platforms, and CI agent set-up. Added libusb-1.x support and many new driver categories (and drivers), and daisychain device connection support. Instant commands enhanced with TRACKING to enable protocol-based waiting for completion of a particular INSTCMD or SET operation.	JK
2.7.4	2016-03-09	NUT variables namespace updated, in particular for outlet groups, alarms and thresholds, ATS devices, and battery.charger.status to supersede CHRG and DISCHRG flags published in ups.status readings. NUT network protocol extended with NUMBER type; some API changes.	AQ
2.7.3	2015-04-22	Documentation revised, including some API changes. Added NUT DDL links. NUT variables namespace updated.	AQ
2.7.2	2014-04-17	The nut-website project was offloaded into a separate repository. FreeDesktop HAL support was removed (obsoleted in GNOME consumer). Introduced nutdrv_atcl_usb driver.	AQ
2.7.1	2013-11-19	NUT source codebase migrated from SVN to Git (and from Debian infrastructure to GitHub source code hosting). jNut binding split into a separate project. Introduced libnutclient (C++ binding), al175, apcupsd-ups and nutdrv_qx drivers, Mozilla NSS support for simpler licensing than OpenSSL, and a newer apcsmart implementation. Documentation support enhanced with a spell checker, contents massively updated to reflect project changes.	CL

REVISION HISTORY			
NUMBER	DATE	DESCRIPTION	NAME
2.6.5	2012-08-08	New macosx-ups driver, new implementation of mge-shut driver. NUT variables namespace updated. Docs cleaned up and revised.	AQ
2.6.4	2012-05-31	New NUT network protocol commands (LIST CLIENTS, LIST RANGE and NETVER), and socket protocol commands (ADDRANGE, DELRANGE). NUT variables namespace updated. Introduced nut-recorder tool.	AQ
2.6.3	2012-01-04	No substantial changes to documentation.	AQ
2.6.2	2011-09-15	Introduced nut-scanner tool and nut-ipmipsu driver, systemd support, and a new apcsmart implementation.	AQ
2.6.1	2011-06-01	Introduced default.* and override.* optional settings in ups.conf, an ups.efficiency report, and outlet.0 special handling.	AQ
2.6.0	2011-01-14	First release of AsciiDoc documentation for Network UPS Tools (NUT).	AQ

Contents

1 APC **1**

1.1 940-0024C clone . . . 1

1.2 940-0024E clone . . . 1

1.3 940-0024C clone for Macs . . . 1

2 Belkin **2**

2.1 OmniGuard F6C***-RKM . . . 2

3 Eaton **2**

3.1 MGE Office Protection Systems . . . 2

3.1.1 DB9-DB9 cable (ref 66049) . . . 2

3.1.2 DB9-RJ45 cable . . . 3

3.1.3 NMC DB9-RJ45 cable . . . 4

3.1.4 USB-RJ45 cable . . . 4

3.1.5 DB9-RJ12 cable . . . 5

3.2 Powerware LanSafe . . . 7

3.3 SOLA-330 . . . 7

4 HP - Compaq **8**

4.1 Older Compaq UPS Family . . . 8

5 Phoenixtec (Best Power) **8**

6 Tripp-Lite **9**

1 APC

1.1 940-0024C clone

From D. Stimits

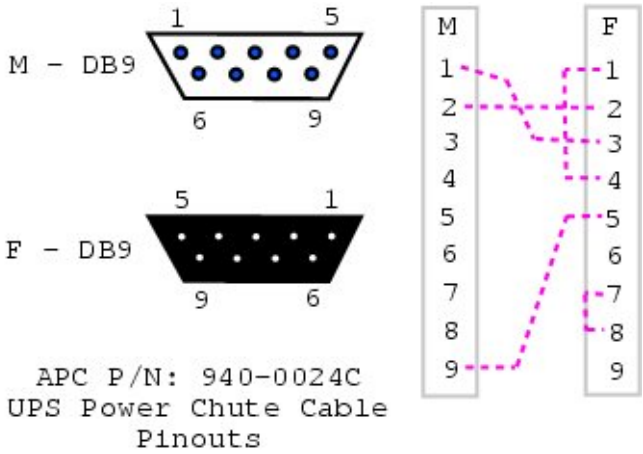

Note
The original 940-0024C diagram was contributed by Steve Draper.

1.2 940-0024E clone

Reported by Jonathan Laventhol

This cable is said to use the same wiring as 940-0024C clone.

1.3 940-0024C clone for Macs

From Miguel Howard

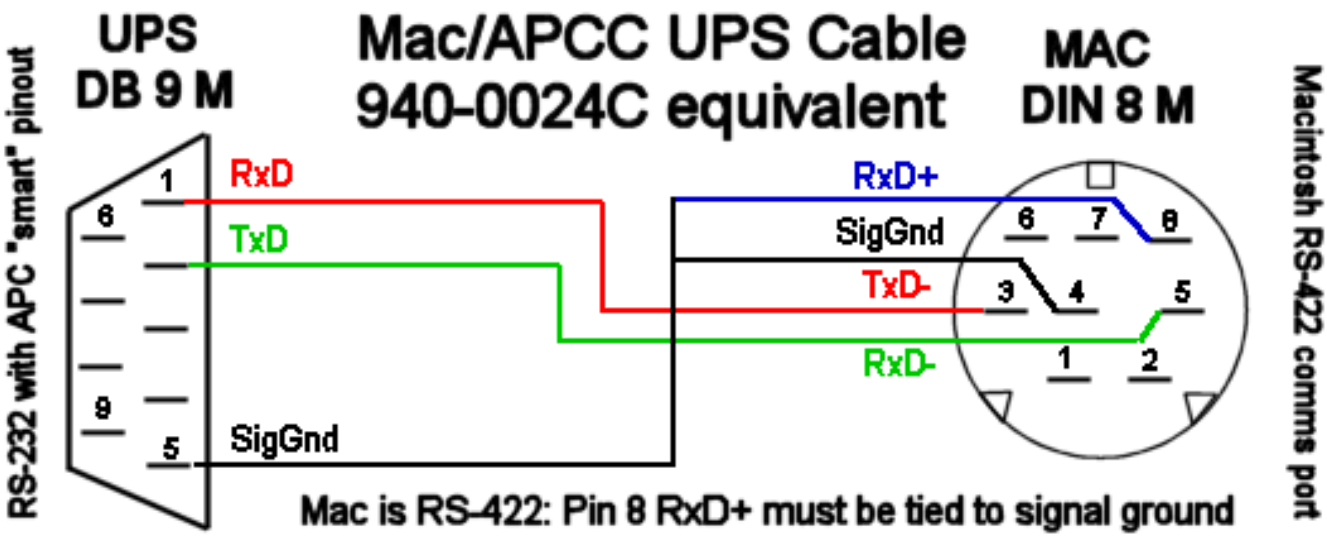

2 Belkin

2.1 OmniGuard F6C***-RKM

From "Daniel"

A straight-through RS-232 cable (with pins 2-7 connected through) should work with the following models:

- F6C110-RKM-2U
- F6C150-RKM-2U
- F6C230-RKM-2U
- F6C320-RKM-3U

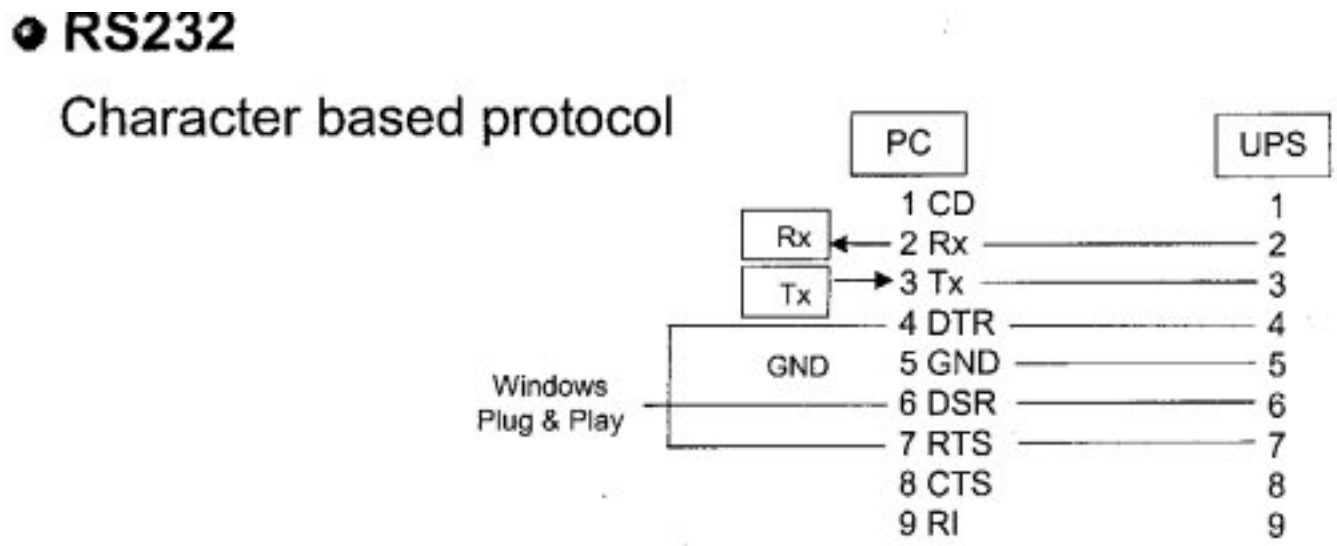

3 Eaton

Documents in this section are provided courtesy of Eaton.

3.1 MGE Office Protection Systems

The three first cables also applies to MGE UPS SYSTEMS and Eaton.

3.1.1 DB9-DB9 cable (ref 66049)

This is the standard serial cable, used on most units.

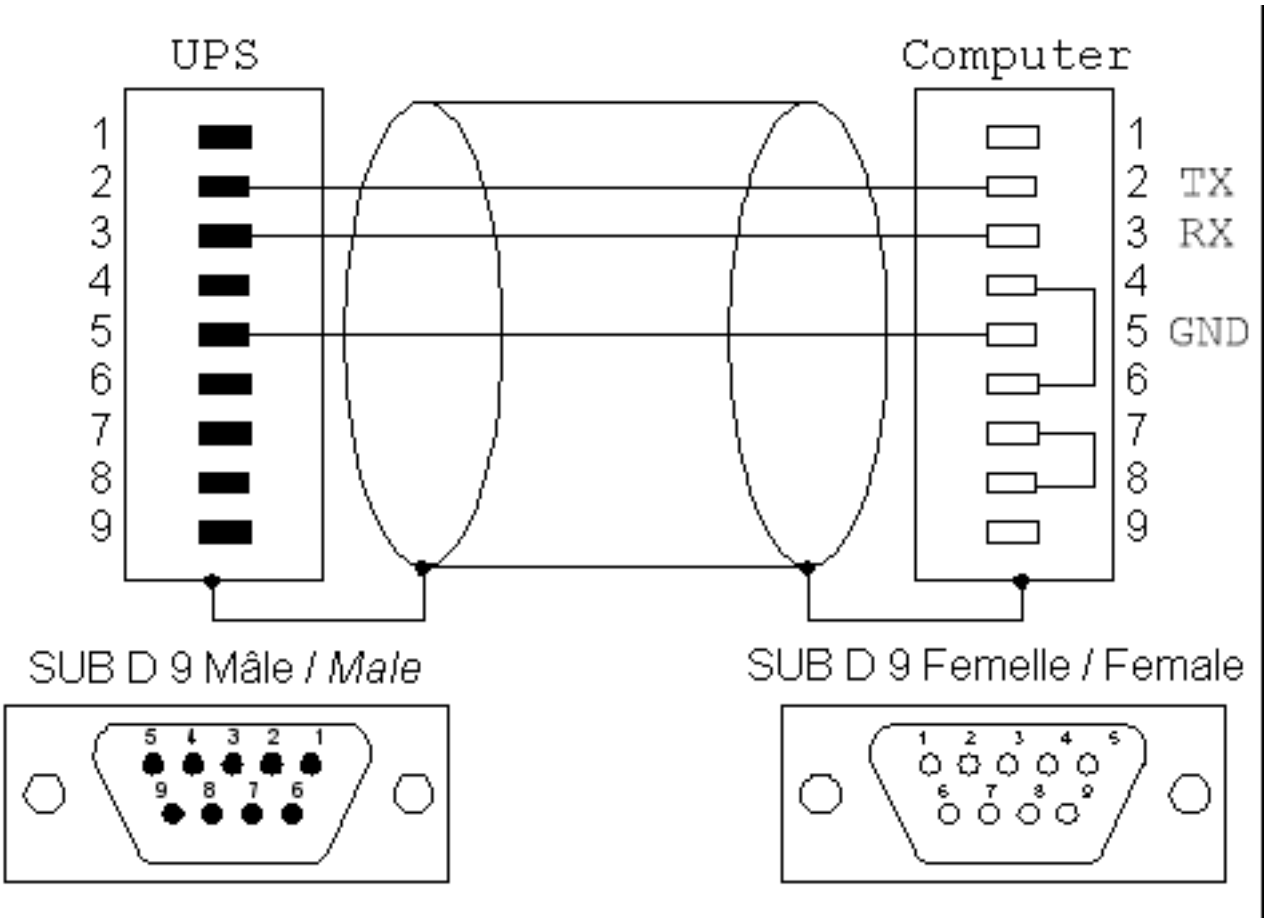

3.1.2 DB9-RJ45 cable

This cable is used on the more recent models, including Ellipse MAX, Protection Station, . . .

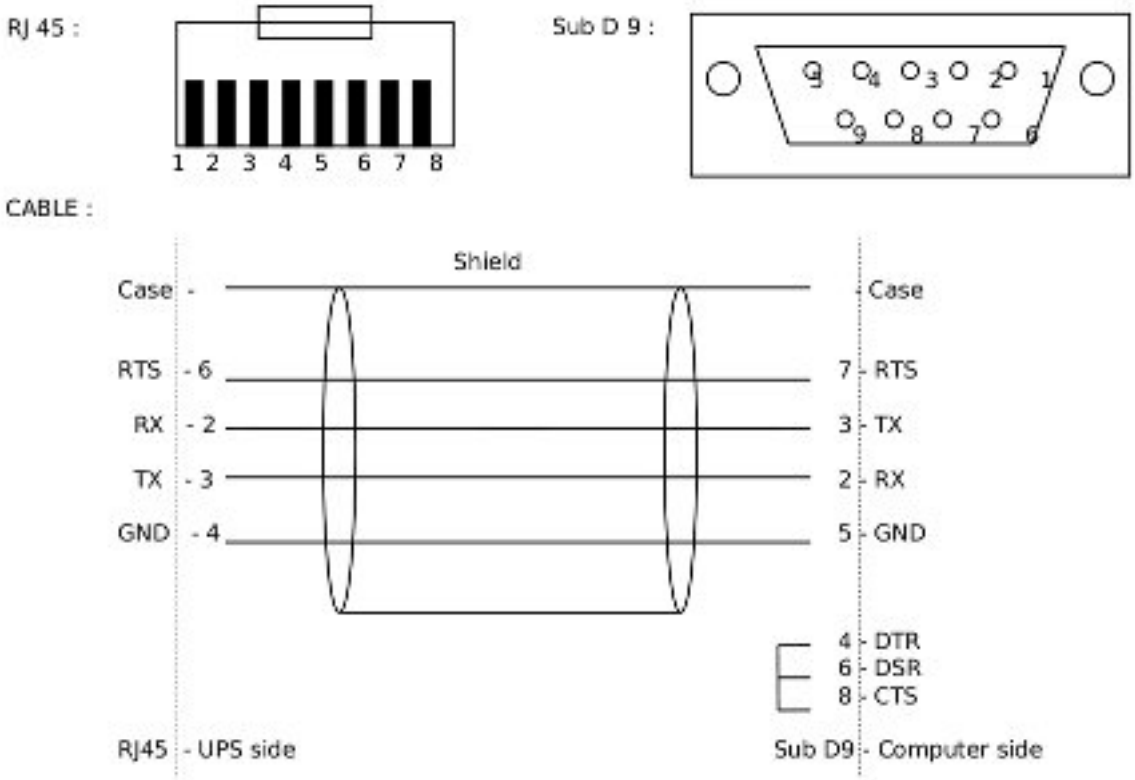

3.1.3 NMC DB9-RJ45 cable

The following applies to the MGE 66102 NMC (Network Management Card), and possibly other models. The NMC connection is an 8P8C RJ45-style jack.

Signal	PC	NMC
	1,4,6	
TxD	2	3
RxD	3	6
GND	5	4
	7,8	
	shield	shield

3.1.4 USB-RJ45 cable

This cable is used also on the more recent models, including Ellipse MAX, Protection Station, . . .

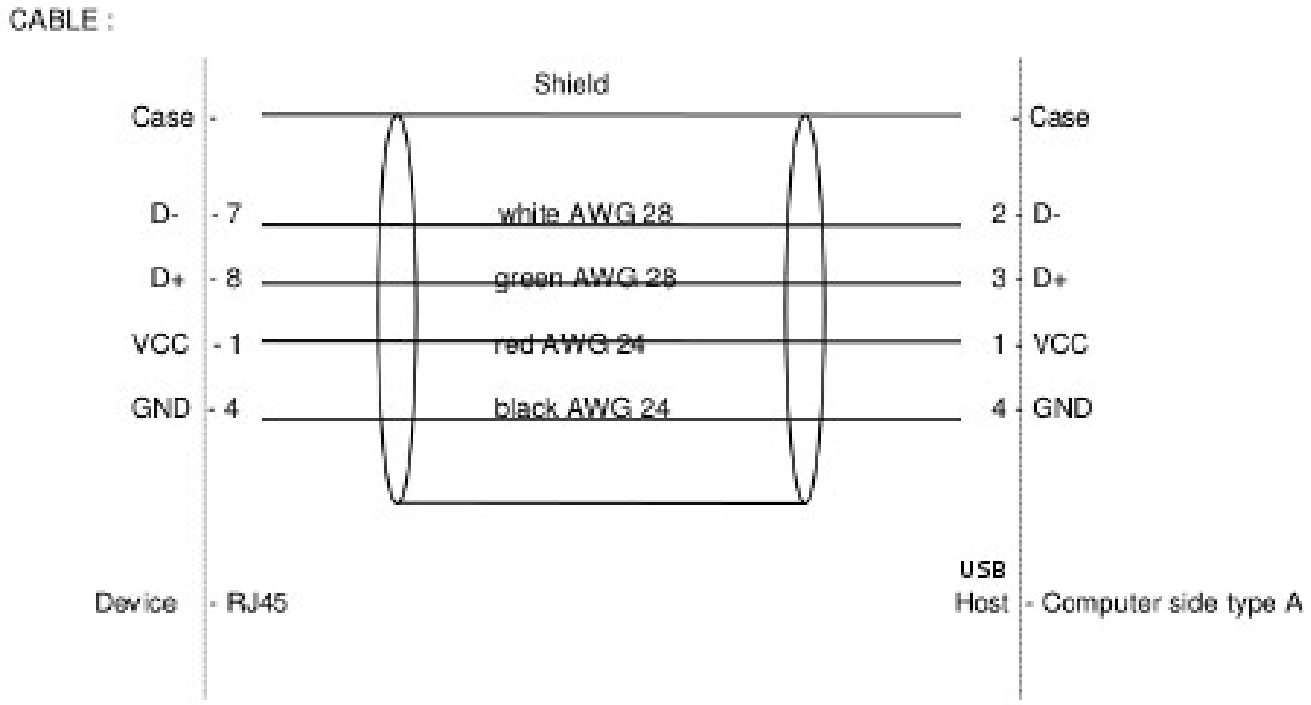

3.1.5 DB9-RJ12 cable

This cable is used on some older Ellipse models.

Sub D 9 :

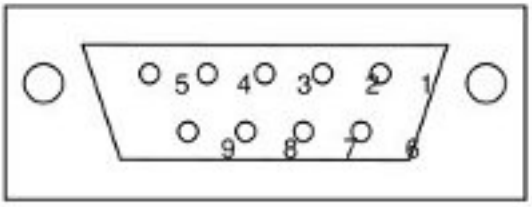

RJ 12 :

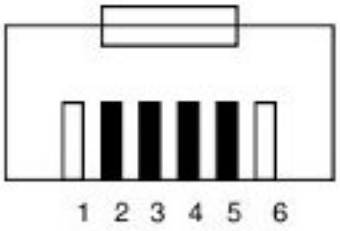

CABLE :

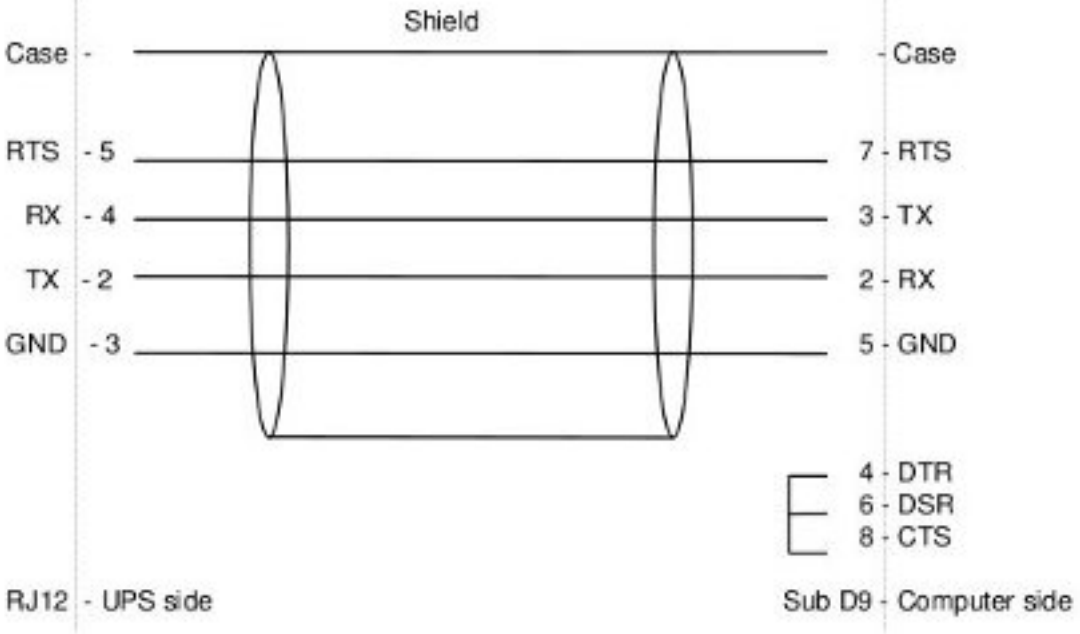

3.2 Powerware LanSafe

LanSafe for

3115 /5105 /5119/9110/9150 /9305

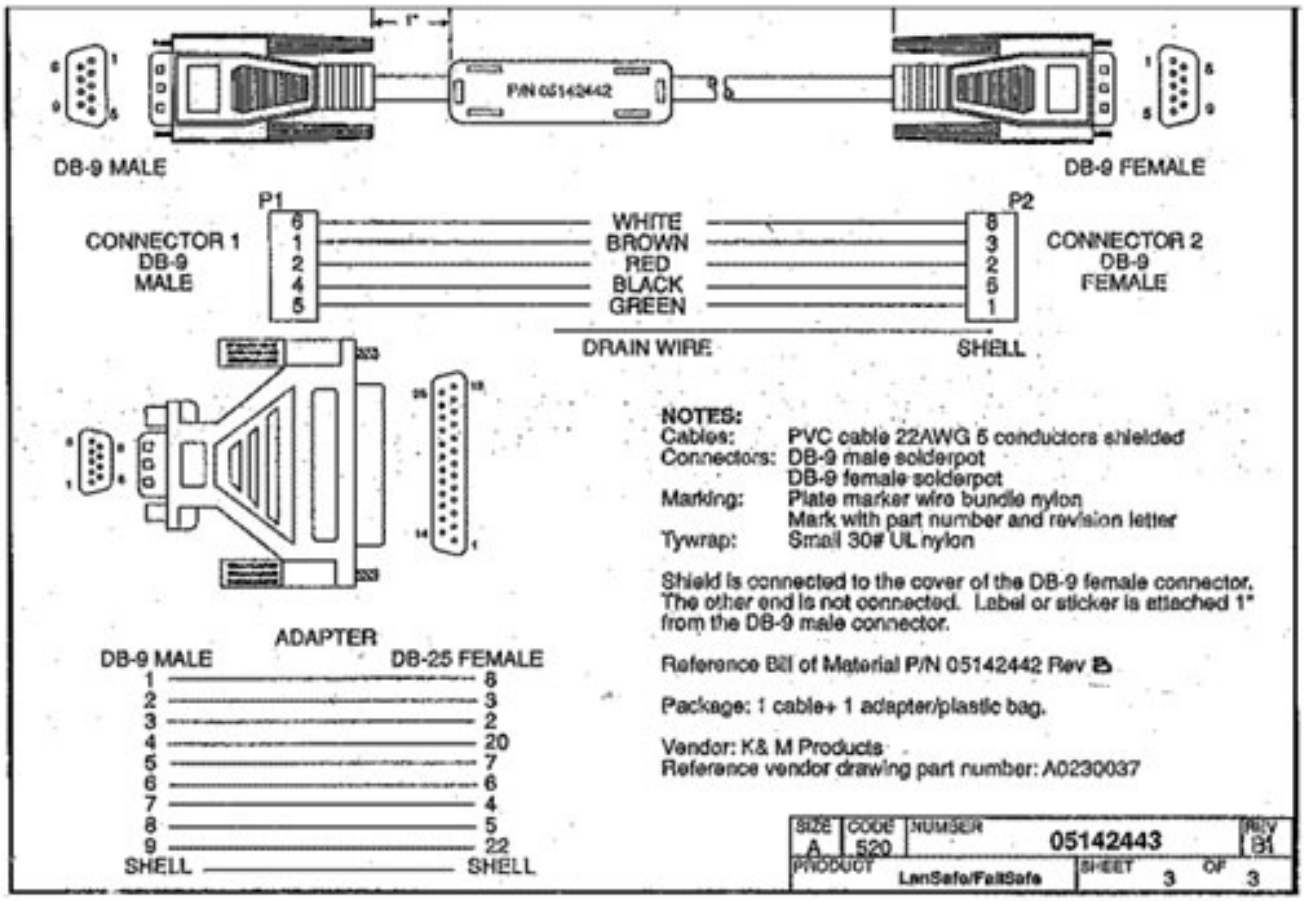

3.3 SOLA-330

Just uses a normal serial cable, with pin 1-1 through to 9-9.

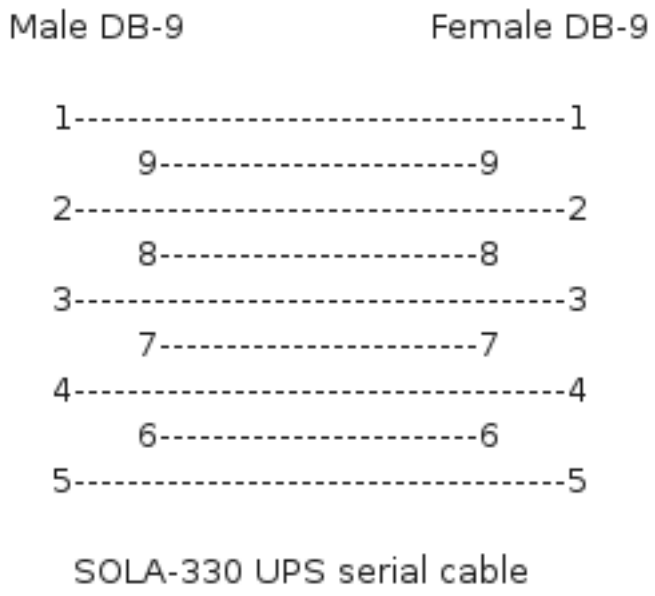

4 HP - Compaq

4.1 Older Compaq UPS Family

This cable can be used with the following models:

T700, T1000, T1500, T1500j, T700h, T1000h, T1500h, R1500, R1500j, R1500h, T2000, T2000j, T2400h, T2400h-NA, R3000 / R3000j, R3000h, R3000h-International, R3000h-NA, R6000h-NA, R6000i, R6000j.

```
UPS         PC  9 pin connector

 1 --------- 3
 2 --------- 2
             4 -\
 4 --------- 5   |
             6 -/
 6 --------- 7
```

Contributed by Kjell Claesson and Arnaud Quette.

5 Phoenixtec (Best Power)

Many Best Power units (including the Patriot Pro II) have a female DB-9 socket with a non-standard pinout.

Signal	PC	UPS
	1,4,6	NC
TxD	2	2
RxD	3	1
GND	5	4
	7,8	NC

Sources:

- http://pinoutsguide.com/UPS/best_power_pinout.shtml
- http://lit.powerware.com/ll_download.asp?file=m_patriotproii_jan99.pdf
- Stan Gammons

6 Tripp-Lite

From Tripp-Lite, via Bryan Kolodziej
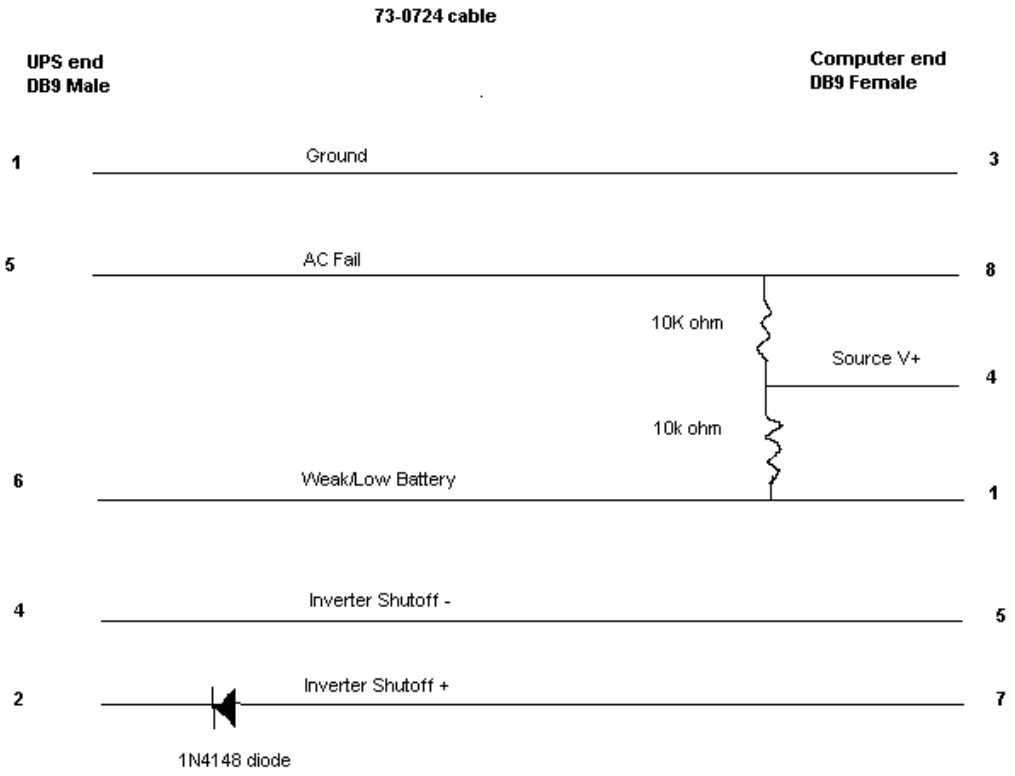
This cable (black 73-0844 cable) is used on various models, using the "Lan 2.2 interface" and the genericups driver (upstype=5).