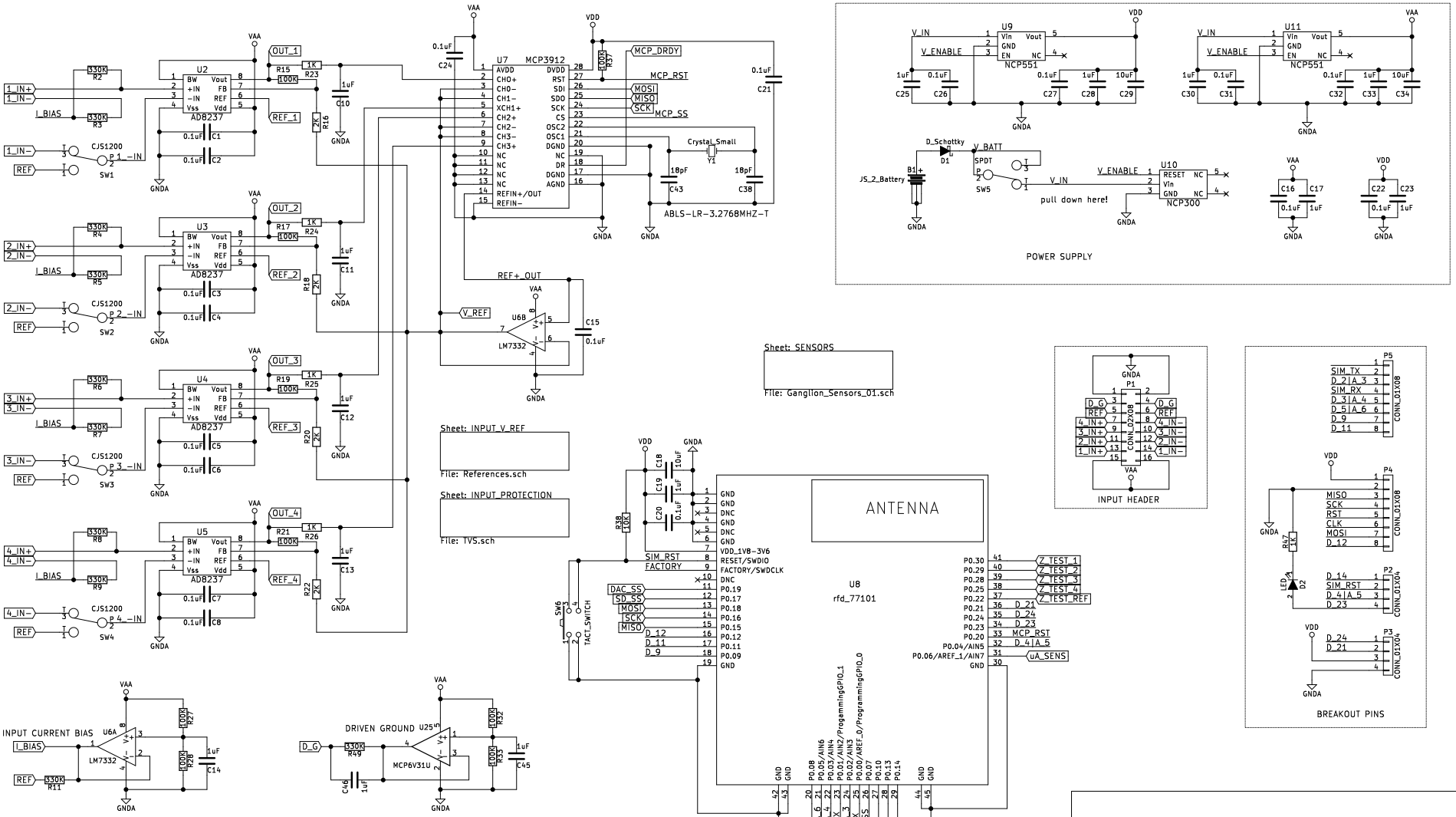
U2
AD8237
U3
AD8237
U4
AD8237
U5
AD8237
U7
MCP3912
U6B
LM7332
U6A
LM7332
U25
MCP6V31U
U8
rfd_77101
ANTENNA
U9
NCP551
U11
NCP551
U10
NCP300
POWER SUPPLY
pull down here!
ABLS-LR-3.2768MHZ-T
Sheet: SENSORS
File: Ganglion_Sensors_01.sch
Sheet: INPUT_V_REF
File: References.sch
Sheet: INPUT_PROTECTION
File: TVS.sch
INPUT HEADER
BREAKOUT PINS
INPUT CURRENT BIAS
DRIVEN GROUND
OpenBCI
Sheet: /
File: Ganglion_01.sch
Title: Ganglion
Size: B
Date: 2016-07-10
Rev: 01
KiCad E.D.A. kicad 4.0.0-stable
Id: 1/4