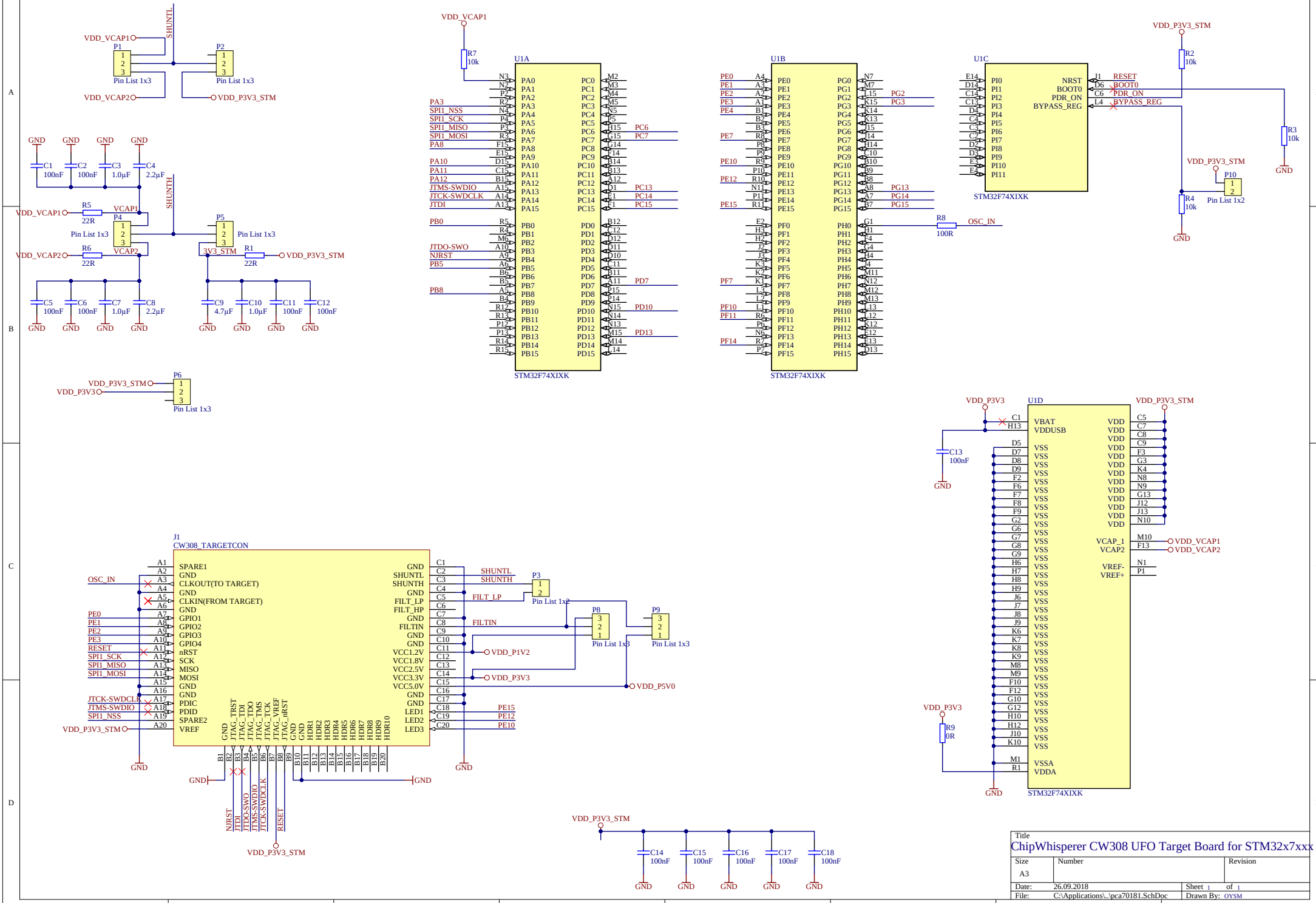
VDD_VCAP1
VDD_VCAP2
SHUNTL
SHUNTH
P1
P2
P3
P4
P5
P6
P8
P9
P10
Pin List 1x3
Pin List 1x2
VDD_P3V3_STM
VDD_P3V3
VDD_P1V2
VDD_P5V0
GND
C1 100nF
C2 100nF
C3 1.0µF
C4 2.2µF
C5 100nF
C6 100nF
C7 1.0µF
C8 2.2µF
C9 4.7µF
C10 1.0µF
C11 100nF
C12 100nF
R5 22R
R6 22R
R1 22R
3V3_STM
R7 10k
R2 10k
R3 10k
R4 10k
R8 100R
R9 0R
OSC_IN
U1A
U1B
U1C
U1D
STM32F74XIXK
PA3
SPI1_NSS
SPI1_SCK
SPI1_MISO
SPI1_MOSI
PA8
PA10
PA11
PA12
JTMS-SWDIO
JTCK-SWDCLK
JTDI
PB0
JTDO-SWO
NJRST
PB5
PB8
PC6
PC7
PC13
PC14
PC15
PD7
PD10
PD13
PE0
PE1
PE2
PE3
PE4
PE7
PE10
PE12
PE15
PF7
PF10
PF11
PF14
PG2
PG3
PG13
PG14
PG15
RESET
BOOT0
PDR_ON
BYPASS_REG
J1
CW308_TARGETCON
SPARE1
CLKOUT(TO TARGET)
CLKIN(FROM TARGET)
GPIO1
GPIO2
GPIO3
GPIO4
nRST
SCK
MISO
MOSI
PDIC
PDID
SPARE2
VREF
FILT_LP
FILT_HP
FILTIN
VCC1.2V
VCC1.8V
VCC2.5V
VCC3.3V
VCC5.0V
LED1
LED2
LED3
JTAG_TRST
JTAG_TDI
JTAG_TDO
JTAG_TMS
JTAG_TCK
JTAG_VREF
JTAG_nRST
HDR1
HDR2
HDR3
HDR4
HDR5
HDR6
HDR7
HDR8
HDR9
HDR10
VBAT
VDDUSB
VCAP_1
VCAP2
VREF-
VREF+
VSSA
VDDA
C13 100nF
C14 100nF
C15 100nF
C16 100nF
C17 100nF
C18 100nF
Title
ChipWhisperer CW308 UFO Target Board for STM32x7xxx
Size
A3
Number
Revision
Date: 26.09.2018
Sheet 1 of 1
File: C:\Applications\..\pca70181.SchDoc
Drawn By: OYSM

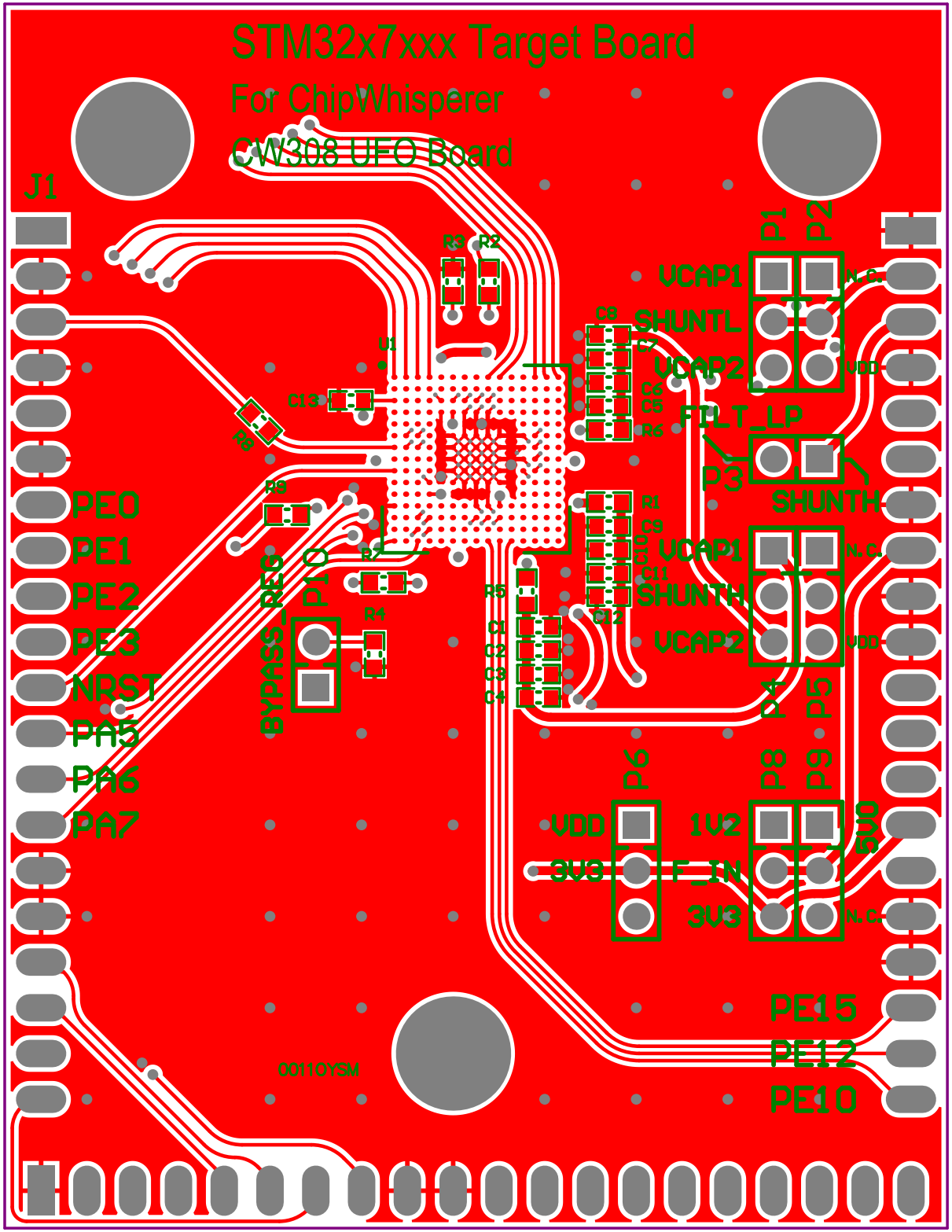
STM32x7xxx Target Board
For ChipWhisperer
CW308 UFO Board
J1
PE0
PE1
PE2
PE3
NRST
PA5
PA6
PA7
BYPASS
REG
P1
P2
VCAP1
SHUNTL
VCAP2
FILT_LP
P3
SHUNTH
VCAP1
SHUNTH
VCAP2
P4
P5
P6
VDD
3V3
P8
P9
1V2
F_IN
3V3
3V0
N.C.
VDD
PE15
PE12
PE10
00110YSM

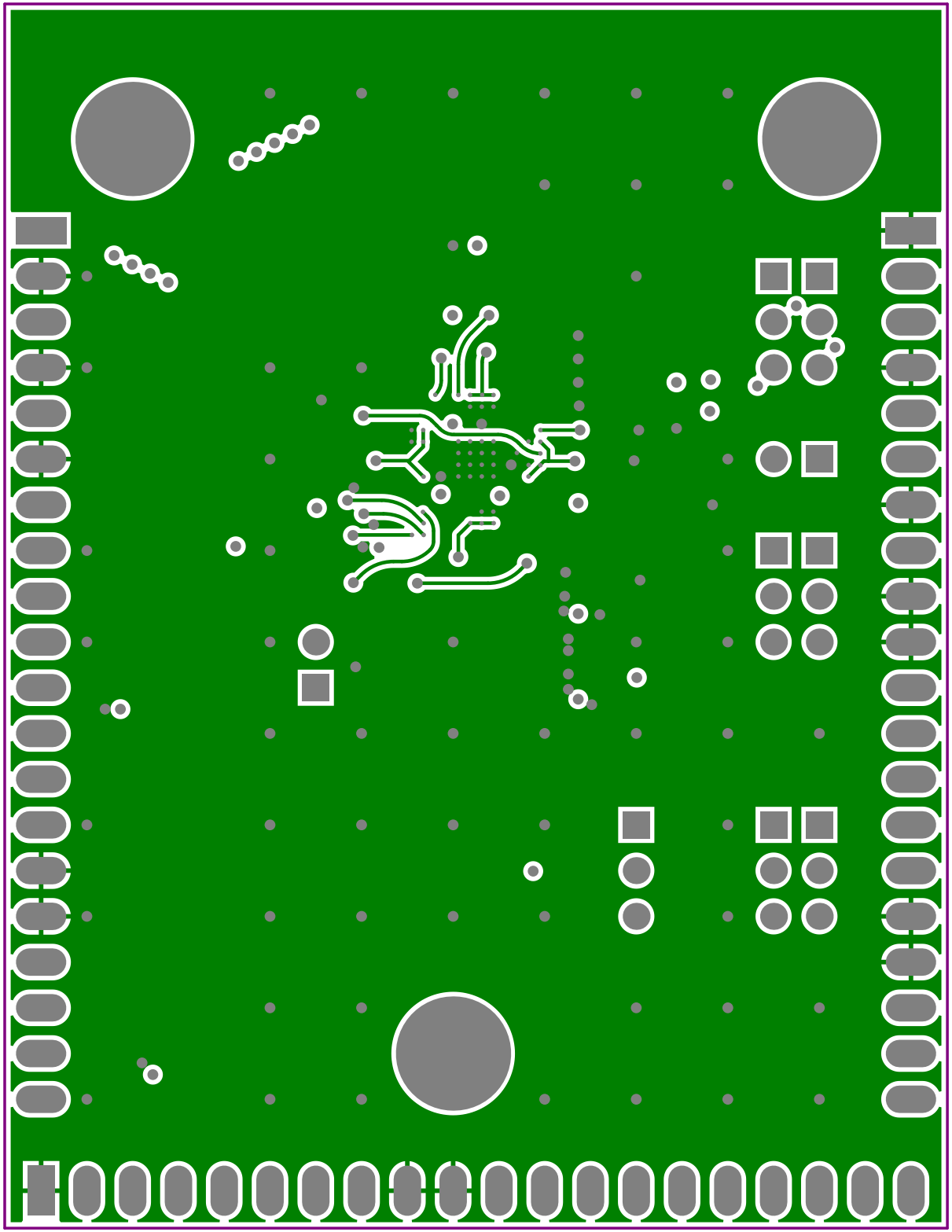

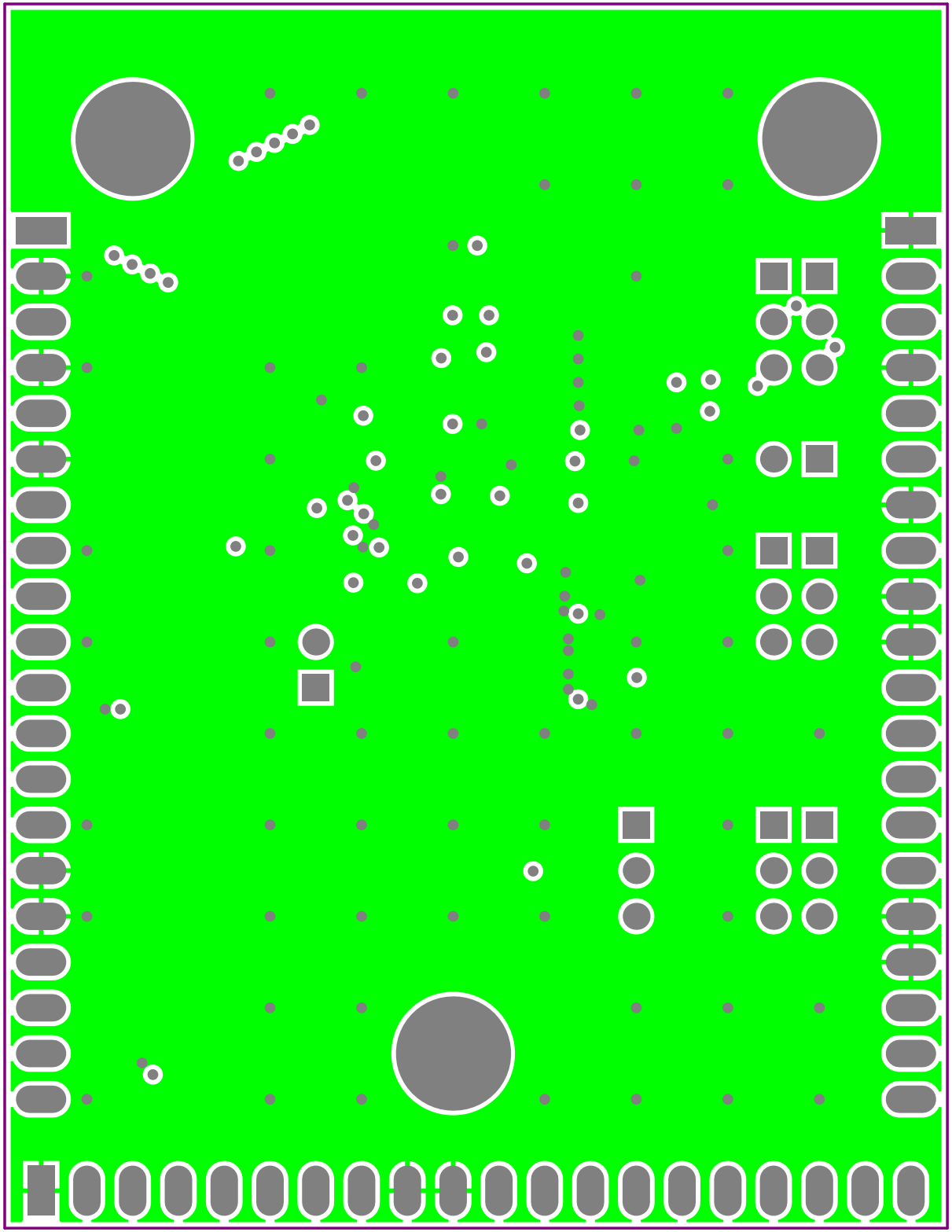

STM32x7xxx Target Board
For ChipWhisperer
CW308 UFO Board
C18
C17
C14
C16
C15
SN:
0011OYSM

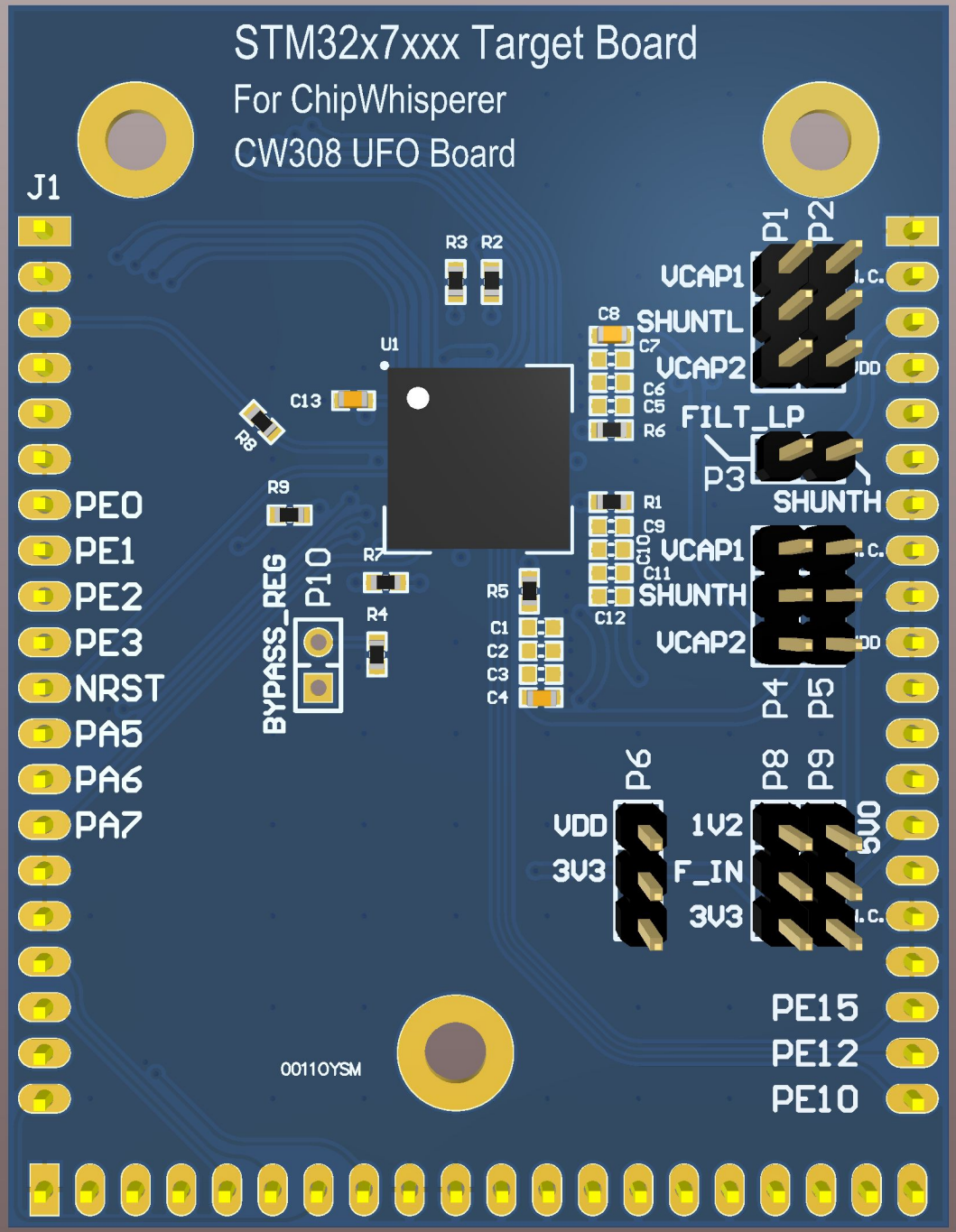
STM32x7xxx Target Board
For ChipWhisperer
CW308 UFO Board
J1
PE0
PE1
PE2
PE3
NRST
PA5
PA6
PA7
BYPASS_REG
P10
R3 R2
U1
C13
R8
R9
R7
R4
R5
C1
C2
C3
C4
C8
C7
C6
C5
R6
R1
C9
C10
C11
C12
P1
P2
VCAP1
SHUNTL
VCAP2
FILT_LP
P3
SHUNTH
VCAP1
SHUNTH
VCAP2
P4
P5
P6
VDD
3V3
P8
P9
1V2
F_IN
3V3
5V0
PE15
PE12
PE10
00110YSM