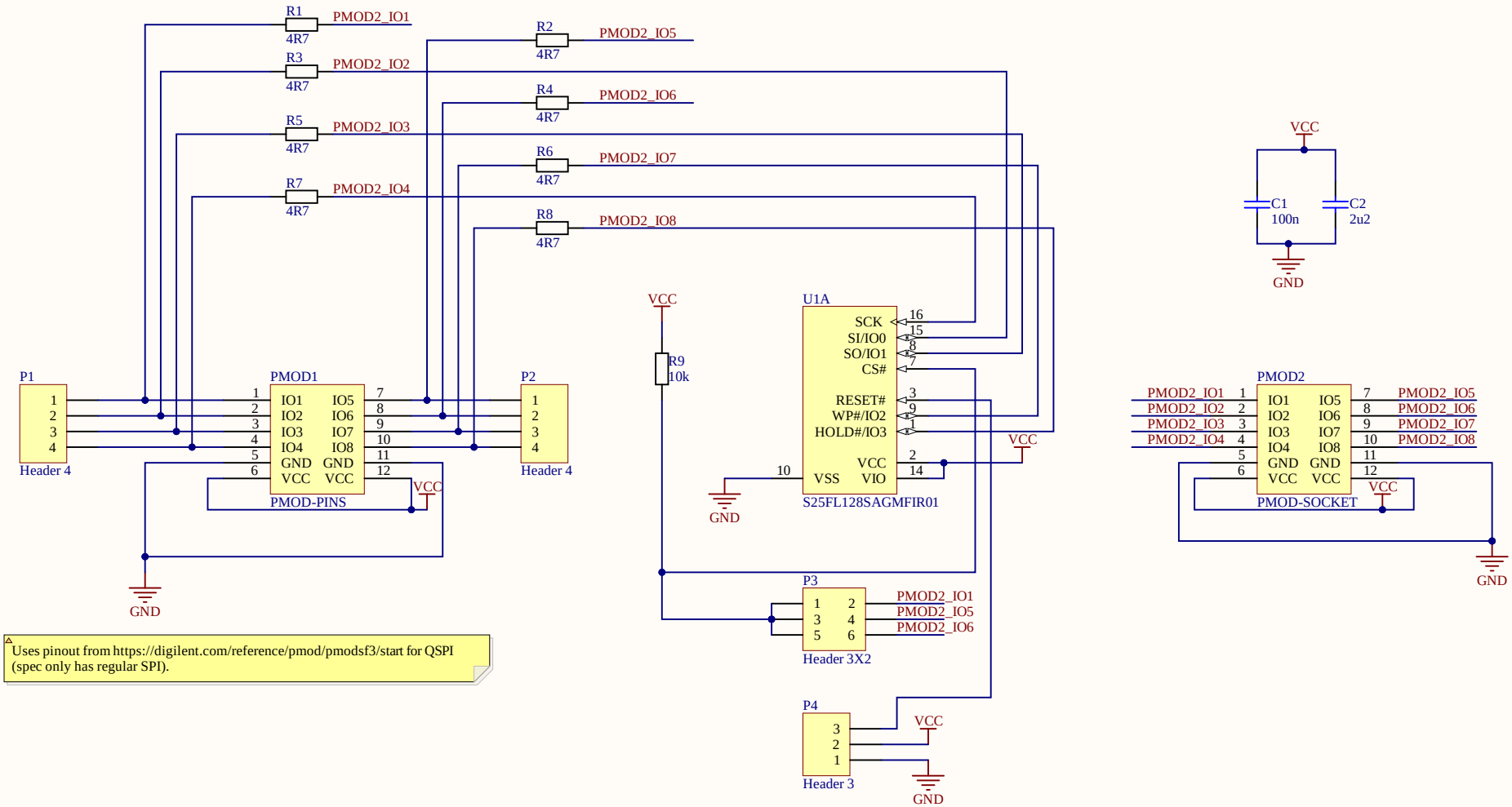

Uses pinout from https://digilent.com/reference/pmod/pmodsf3/start for QSPI (spec only has regular SPI).

Title: **QSPI Magic**		Approved: NO	NewAE Technology
Rev: 01	Project: PMOD QSPI Adapter	License: CC SA	
Date: 2023-03-27	Time: 11:49:39 PM	Sheet 1 of 1	Copyright © NewAE Technology Inc. NewAE.com
File: QSPI_soic16.SchDoc			