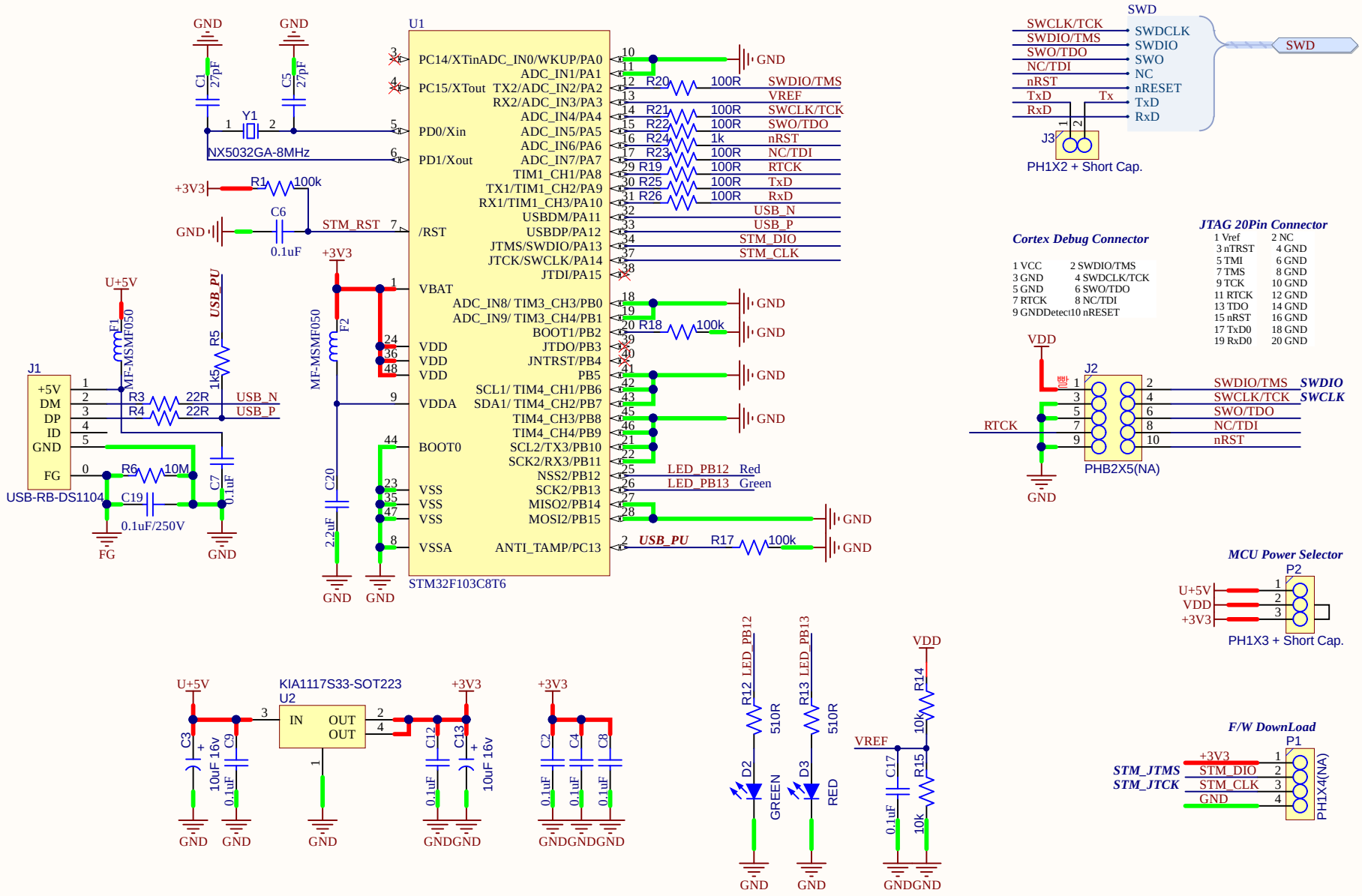

Title : *A_Link Cotex-M Debug Interface*		ABOV Semiconductor Co., Ltd. 93-lo, gag-li 1, OChang-eub, CheongWon-gu, Cheongju-si, Chungbuk, Korea (363-885)
Size : A4	Number: *	Revision: Rev 1.2
Date: 2018-03-29 Time: 오전 10:36:29	Sheet * of *	
File : A_Link.SchDoc		

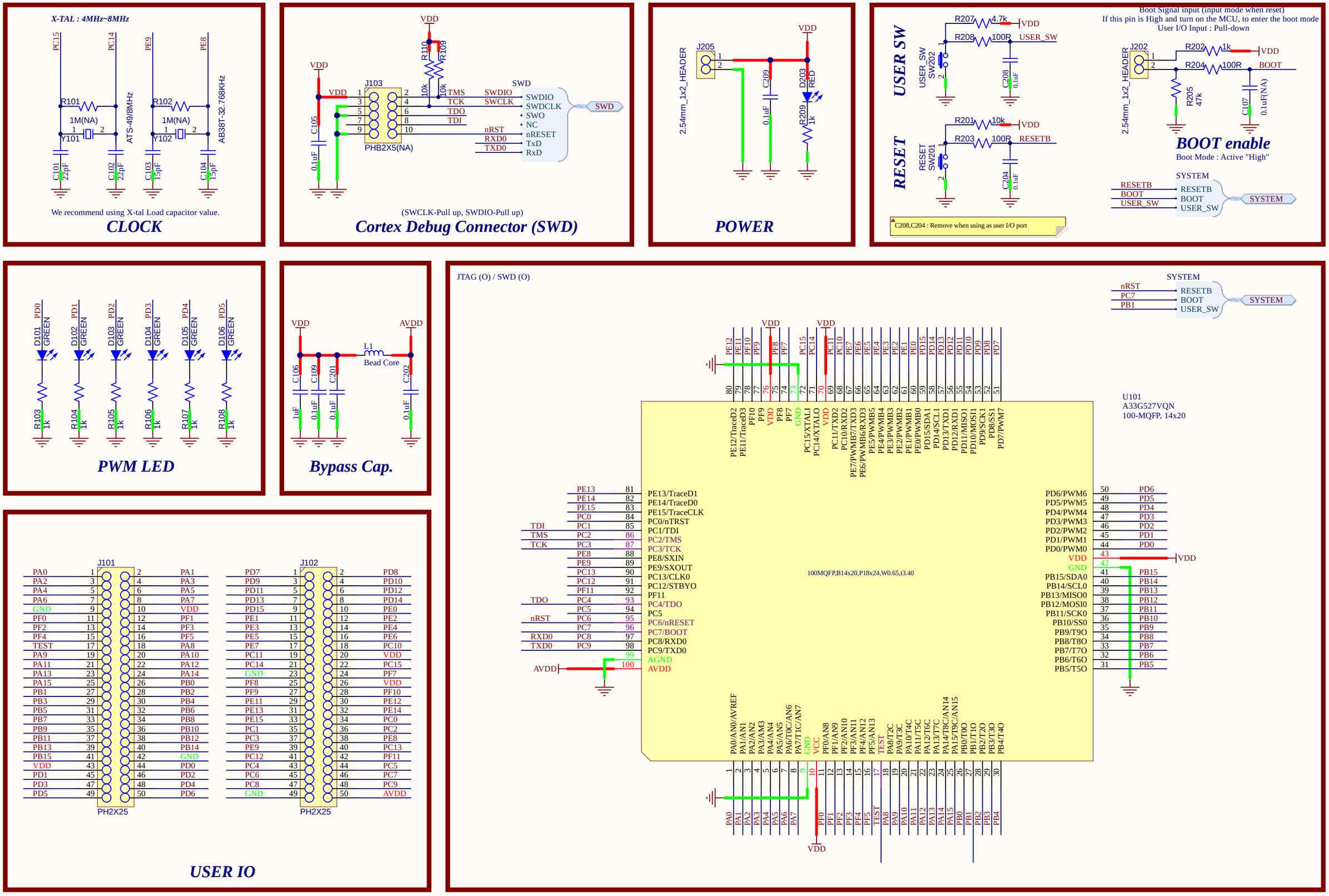

Title : Starter Kit_A33G526RLN			ABOV Semiconductor Co., Ltd. 93-lo, gag-li 1 OChang-eub, CheongWon-gu, Cheongju-si, Chungbuk, Korea (363-885)
Size : A3	Number: *	Revision: Rev 1.0	
Date: 2018-03-29 Time: 오전 10:36:30	Sheet * of *		
File : Starter Kit_A33G527VQN.SchDoc			

LOGO

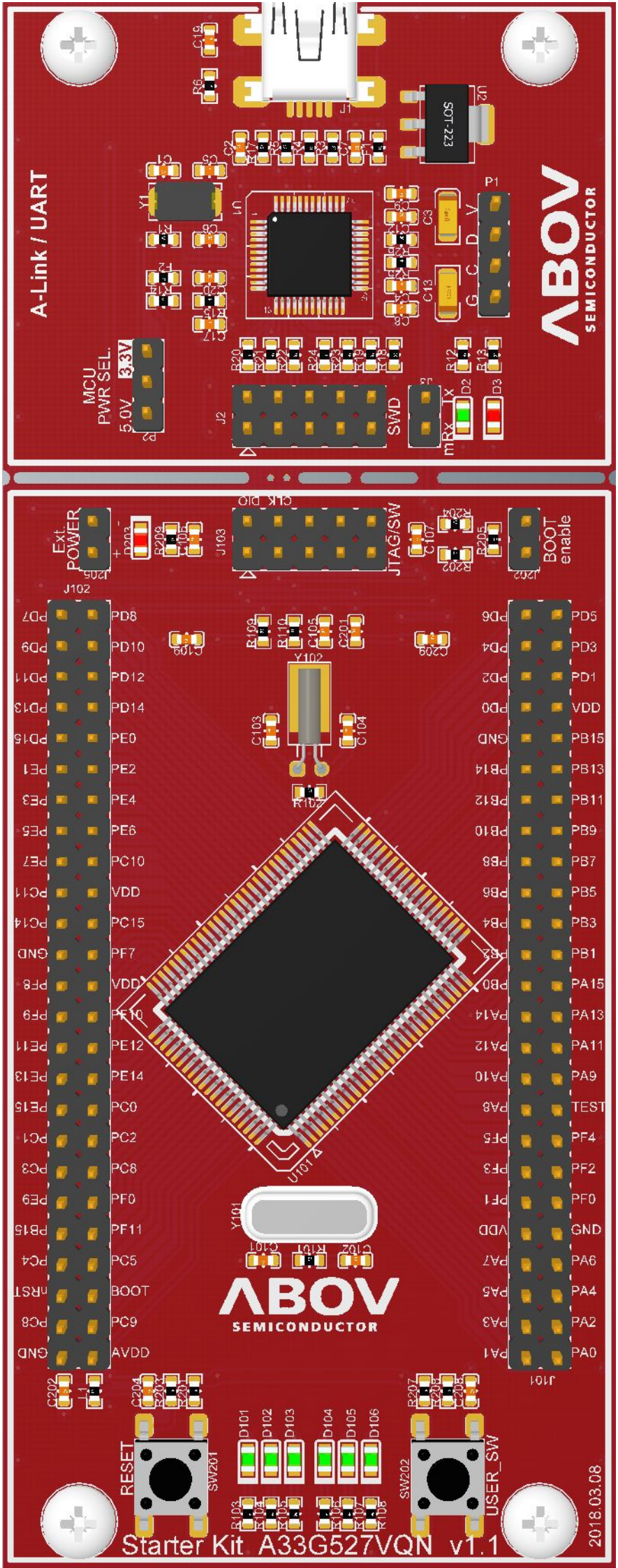
A-Link / UART
ABOV
SEMICONDUCTOR
MCU
PWR SEL.
3.3V
5.0V
SWD
mRx
Tx
Ext.
POWER
JTAG/SW
BOOT
enable
RESET
USER_SW
Starter Kit A33G527VQN v1.1
2018.03.08

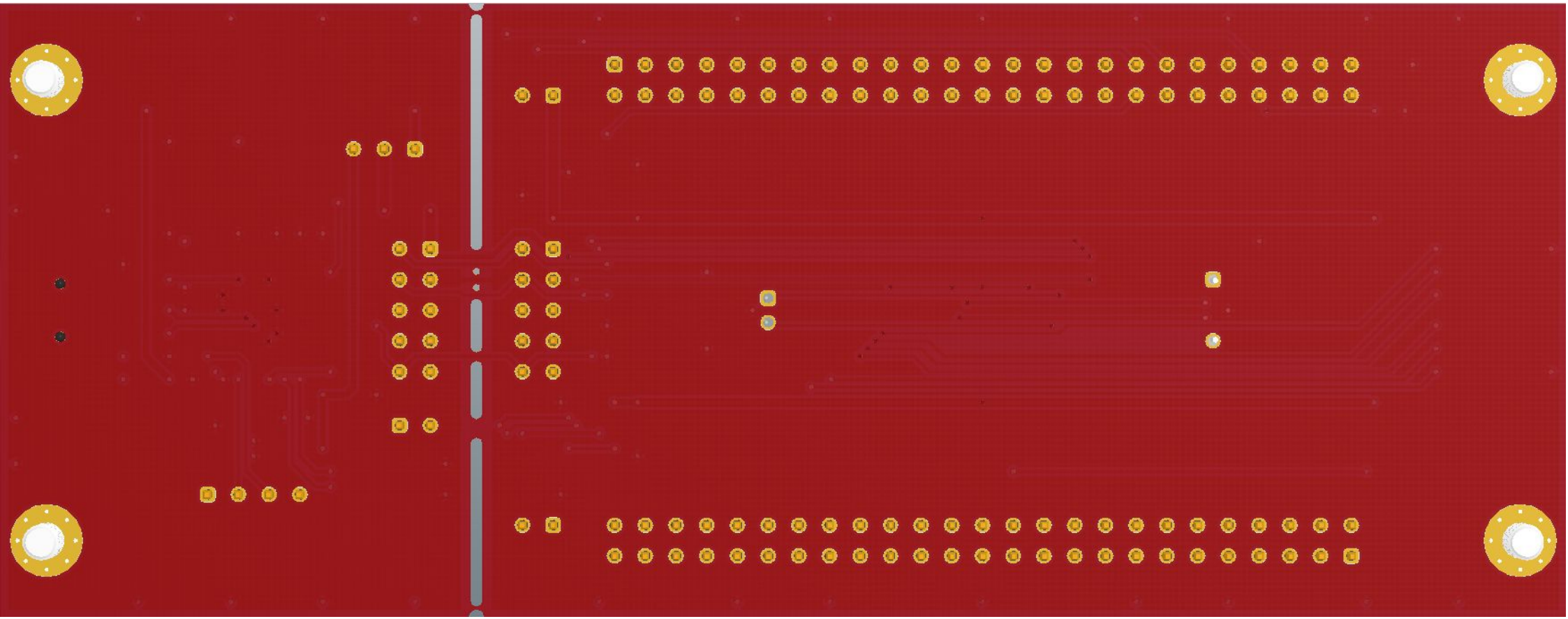

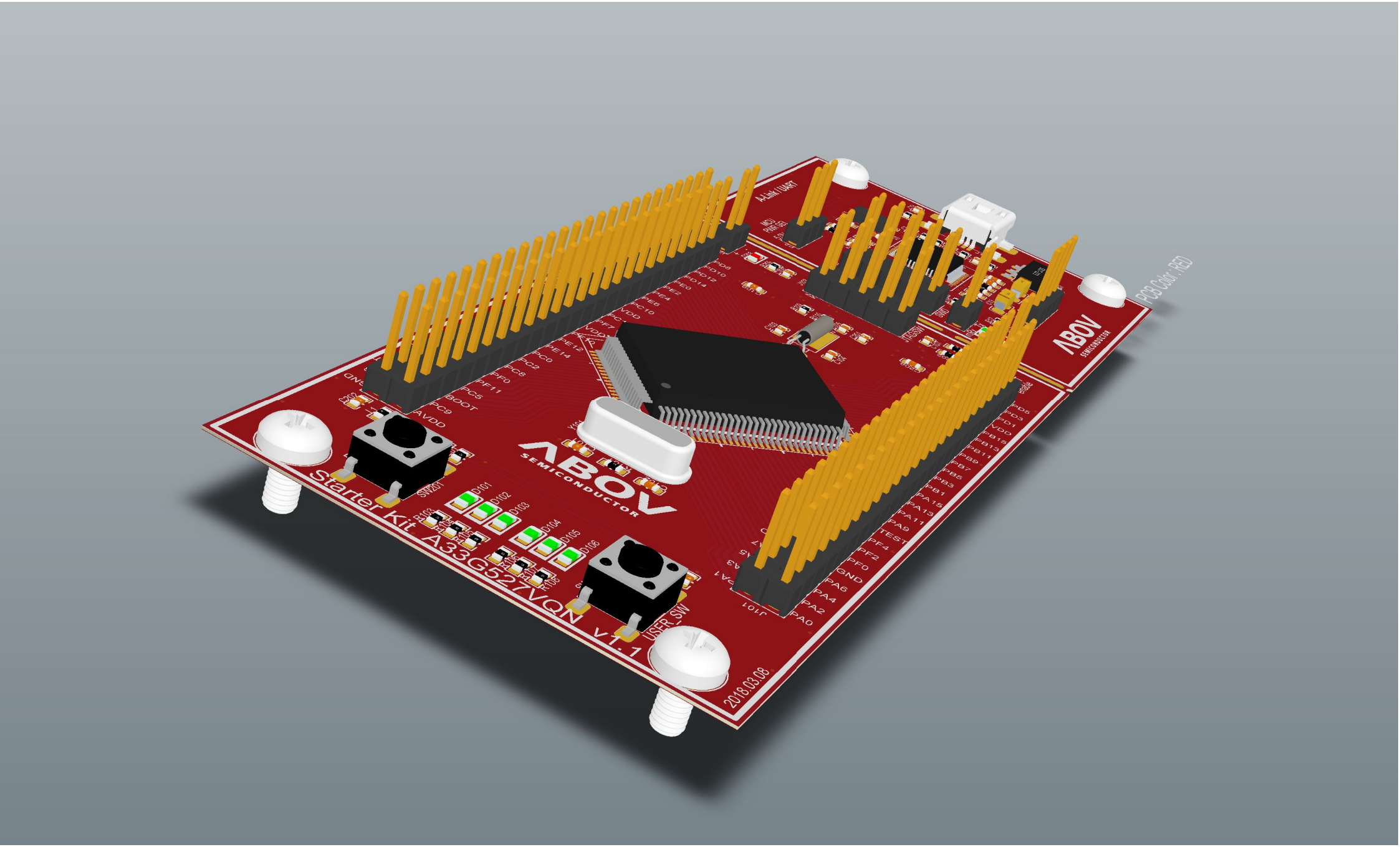
Starter Kit A33G527VQN v1.1
ABOV
SEMICONDUCTOR
USER_SW
2018.03.08
PCB Color : RED