NRC7394 Application Note
(CH347_USB_SPI)

Ultra-low power & Long-range Wi-Fi

Ver 1.1
Sep. 16, 2025

NEWRACOM, Inc.

© Copyright Newracom 2025. All rights reserved.
Confidential

NRC7394 Application Note (CH347_USB_SPI)
Ultra-low power & Long-range Wi-Fi

© 2025 NEWRACOM, Inc.

All right reserved. No part of this document may be reproduced in any form without written permission from Newracom.
Newracom reserves the right to change in its products or product specification to improve function or design at any time without notice.

Office

Newracom, Inc.
505 Technology Drive, Irvine, CA 92618 USA
http://www.newracom.com

Contents

1 Overview 6

2 Wire connection between NRC7394 EVK and CH347T EVB 8

3 CH347 USB-SPI bridge driver 11

4 Getting started 13

4.1 Building the spi-ch347 driver as an external module. 13

4.2 Loading the spi-ch347 driver into the kernel. 16

4.3 Checking the SPI bus number. 17

4.4 Loading the nrc7394 driver into the kernel. 18

4.5 Removing the nrc7394 driver from the kernel. 19

4.6 Removing the spi-ch347 driver from the kernel. 19

5 Iperf throughput 20

5.1 Iperf server (AP) 20

5.2 Iperf client (STA) 22

6 Revision history 24

© Copyright Newracom 2025. All rights reserved.
Confidential

List of Tables

Table 2.1 CH347T - SPI pin descriptions 9
Table 3.1 CH347 USB-SPI Bridge Driver - File Descriptions 11
Table 4.1 NRC7394 SPI related module parameters 18

© Copyright Newracom 2025. All rights reserved.
Confidential

List of Figures

Figure 1.1 CH347 High-Speed USB Converter Chip 6
Figure 2.1 CH347T – Working Mode 8
Figure 2.2 CH347T EVB - Wire Connection with NRC7394 EVK 10
Figure 3.1 CH347 USB-SPI Bridge Driver - Source Tree 11
Figure 3.2 CH347 USB-SPI Bridge Driver - Layer Diagram 12

© Copyright Newracom 2025. All rights reserved.
Confidential

1 Overview

The NRC7394, a Wi-Fi Halow chip, supports a high-speed SPI slave controller for communication with a host that supports SPI master functionality.

Alternatively, the USB interface can be supported via the WCH CH347, a high-speed USB bus converter chip that provides UART, I2C, SPI synchronous serial interfaces, and a JTAG interface over the USB bus.

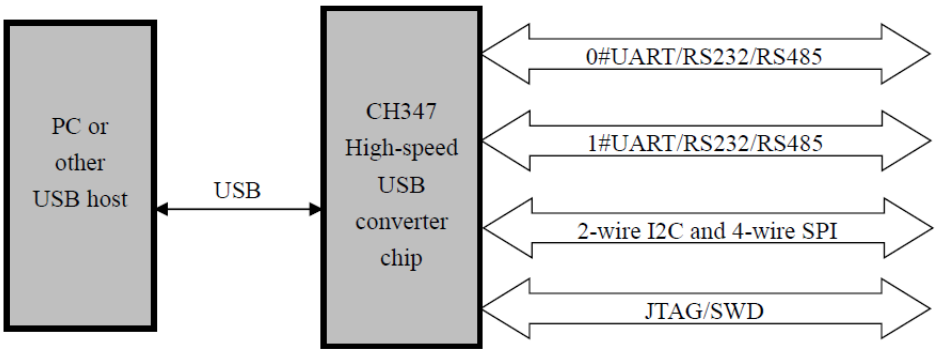

Figure 1.1 CH347 High-Speed USB Converter Chip

The CH347 is available in two models: the CH347F and the CH347T.

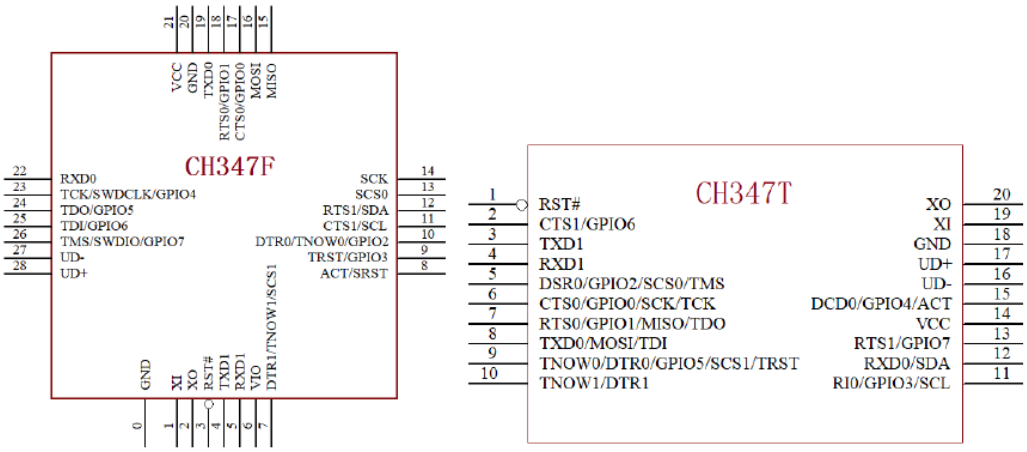

Package Form	Body Size	Pin Pitch		Package Description	Order Model
QFN28	4*4mm	0.4mm	15.7mil	Quad Flat No-Lead Package	CH347F
TSSOP20	4.4*6.5mm	0.65mm	25.6mil	Thin Shrink Small Outline Package	CH347T

To communicate with the NRC7394, the CH347 must be configured as an SPI master. This can be accomplished using the CH347 USB-SPI bridge driver described in this application note. Users can evaluate the CH347 using the NRC7394 evaluation kit and the CH347 evaluation board.

CH347F-EVT-R0-1V0

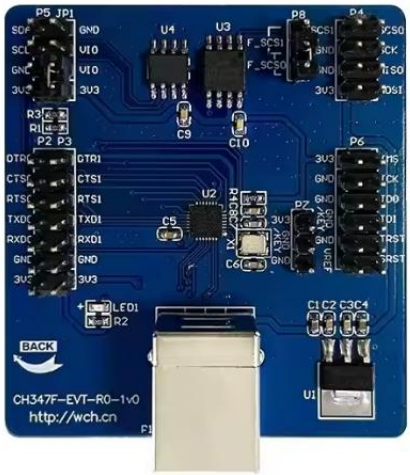

CH347T-EVT-R0-1V1

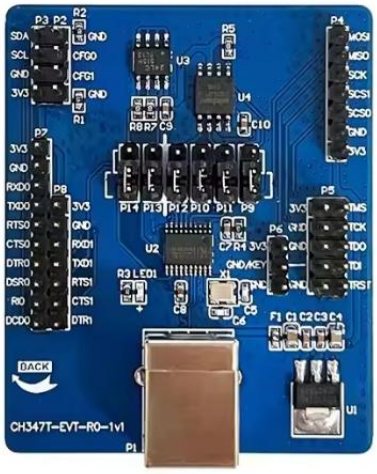

NOTE:

This application note only covers the use of the CH347T EVB.

© Copyright Newracom 2025. All rights reserved.
Confidential

2 Wire connection between NRC7394 EVK and CH347T EVB

The CH347 has multiple working modes, and the function and definition of the same pin in different working modes may be different. The CH347T automatically configures the working mode by detecting the configuration pin status during power-up reset or external reset.

Mode	Mode Description	CFG0	CFG1	Evaluation board wiring diagram
Mode 0	USB to dual high-speed UART	1	1	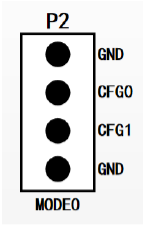
Mode 1	USB to single high-speed UART (VCP) + SPI + I2C	0	1	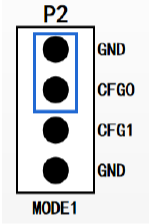
Mode 2	USB to single high-speed UART (HID) + SPI + I2C	1	0	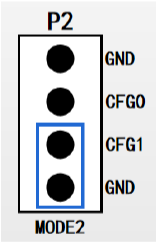
Mode 3	USB to single high-speed UART (VCP) + JTAG/SWD	0	0	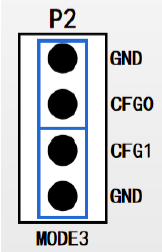

Figure 2.1 CH347T – Working Mode

NOTE:

The CH347 USB-SPI bridge driver described in Chapter 3 supports only Working Mode 1.

© Copyright Newracom 2025. All rights reserved.
Confidential

Table 2.1 shows the SPI pin descriptions of CH347T in Working Mode 1/2.

Pin Number	Pin Name	Pin Type	Pin Description
7	MISO	Input	4-wire serial port data input
8	MOSI	Output	4-wire serial port data output
6	SCK	Output	4-wire serial port clock output
5	SCS0	Output	4-wire serial port chip selection output 0
9	SCS1	Output	4-wire serial port chip selection output 1

Table 2.1 CH347T - SPI pin descriptions

Figure 2.2 shows the wire connection between the NRC7394 Evaluation Kit and the CH347T Evaluation Board.

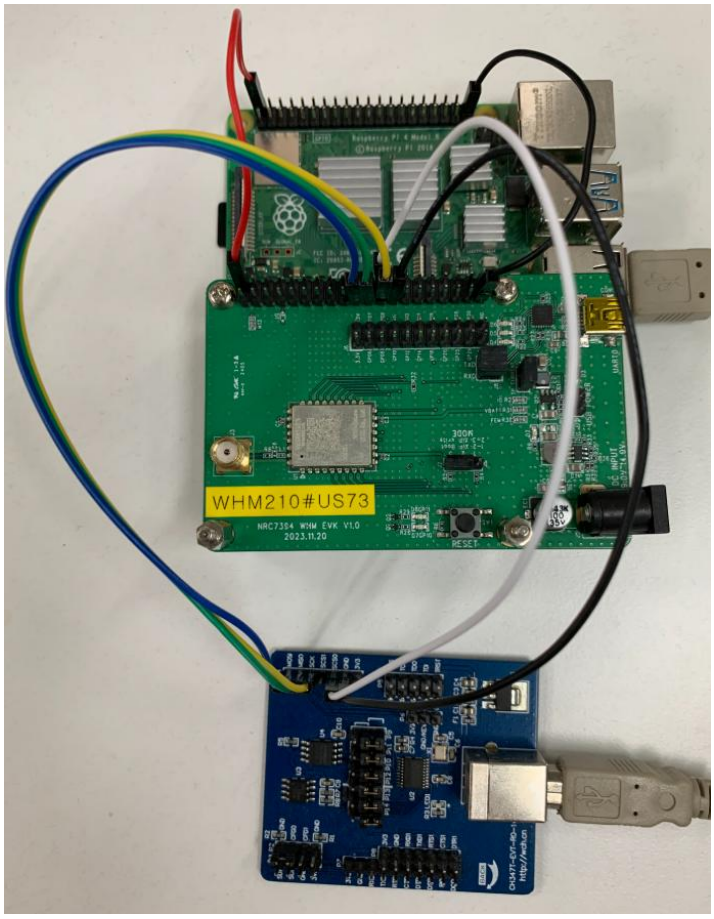

© Copyright Newracom 2025. All rights reserved.
Confidential

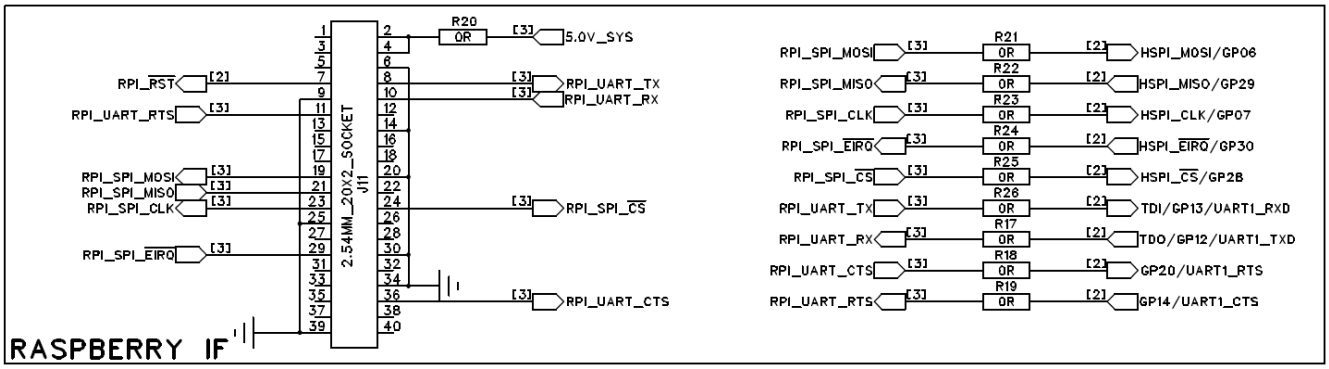

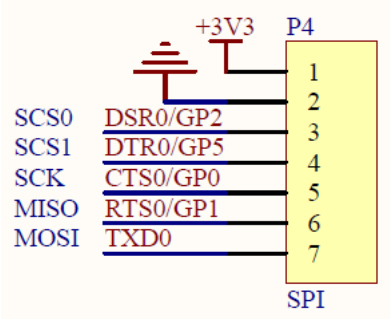

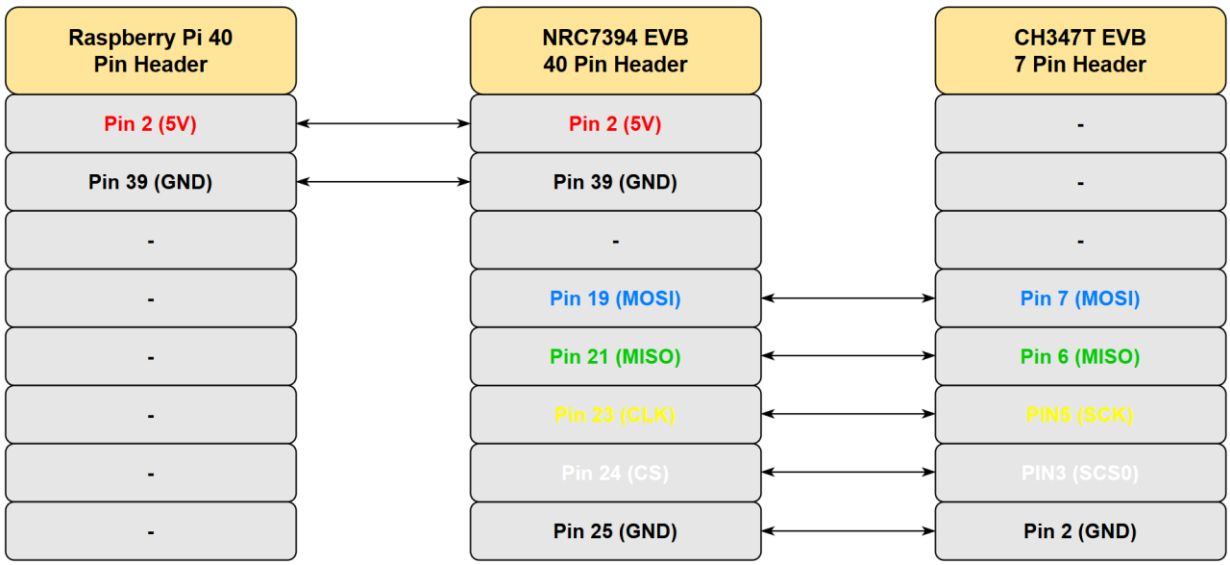

Figure 2.2 CH347T EVB - Wire Connection with NRC7394 EVK

© Copyright Newracom 2025. All rights reserved.
Confidential

3 CH347 USB-SPI bridge driver

The CH347 USB-SPI bridge driver is a Linux device driver that registers an SPI master controller with a USB interface. Figure 3.1 and Table 3.1 show the source tree and file descriptions for the CH347 USB-SPI bridge driver in the nrc7394_sw_pkg.

```
nrc7394_sw_pkg/package/src/ch347-usb-spi/
├── doc
│   ├── CH347DS_v1.4_20250626.PDF
│   └── CH347EVT_v1.6_20250529.ZIP
├── drivers
│   └── spi
│       ├── Kconfig
│       ├── Makefile
│       └── spi-ch347
│           ├── Makefile
│           └── spi-ch347.c
├── Insmod.sh
├── Makefile
└── Rmmod.sh
```

Figure 3.1 CH347 USB-SPI Bridge Driver - Source Tree

File Name	Description
doc/CH347DS_v1.4_20250626.PDF	CH347 Datasheet
doc/ CH347EVT_v1.6_20250529.ZIP	CH347 EVT schematic, manual, …
drivers/spi/Kconfig	Kconfig for kbuild
drivers/spi/Makefile	Makefile for kbuild
drivers/spi/spi-ch347/Makefile	Makefile for kbuild
drivers/spi/spi-ch347/spi-cs347.c	CH347 USP-SPI driver
Insmod.sh	Shell script to insert a module into the kernel
Makefile	Makefile to build as external module
Rmmod.sh	Shell script to remove a module from the kernel

Table 3.1 CH347 USB-SPI Bridge Driver - File Descriptions

© Copyright Newracom 2025. All rights reserved.
Confidential

The CH347 USB-SPI bridge driver registers two types of drivers into the kernel as shown in Figure 3.2.

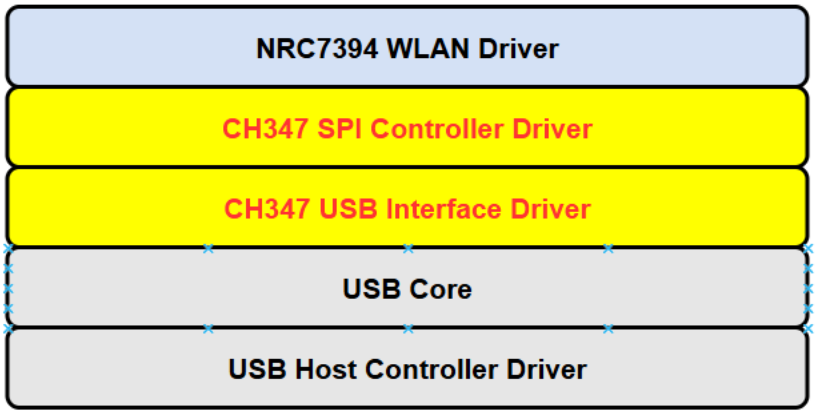

Figure 3.2 CH347 USB-SPI Bridge Driver - Layer Diagram

However, it is built as a single driver module. (spi-ch347.ko)

© Copyright Newracom 2025. All rights reserved.
Confidential

4 Getting started

4.1 Building the spi-ch347 driver as an external module.

$ cd ${CH347_USB_SPI_SOURCE_TOP}

$ make clean

```
pi@raspberrypi:~/ch347-usb-spi $ make clean
make[1]: Entering directory '/usr/src/linux-headers-5.10.17-v7l+'
  CLEAN   /home/pi/ch347-usb-spi/drivers/spi/Module.symvers
make[1]: Leaving directory '/usr/src/linux-headers-5.10.17-v7l+'
```

$ make [debug]

```
pi@raspberrypi:~/ch347-usb-spi $ make
make[1]: Entering directory '/usr/src/linux-headers-5.10.17-v7l+'
  CC [M]  /home/pi/ch347-usb-spi/drivers/spi/spi-ch347/spi-ch347.o
  MODPOST /home/pi/ch347-usb-spi/drivers/spi/Module.symvers
  CC [M]  /home/pi/ch347-usb-spi/drivers/spi/spi-ch347/spi-ch347.mod.o
  LD [M]  /home/pi/ch347-usb-spi/drivers/spi/spi-ch347/spi-ch347.ko
make[1]: Leaving directory '/usr/src/linux-headers-5.10.17-v7l+'
```

If there are no errors, a spi-ch347.ko file will be created under the "drivers/spi/spi-ch347" directory.

$ modinfo ./drivers/spi/spi-ch347/spi-ch347.ko

```
pi@raspberrypi:~/ch347-usb-spi $ modinfo ./drivers/spi/spi-ch347/spi-ch347.ko
filename:       /home/pi/ch347-usb-spi/./drivers/spi/spi-ch347/spi-ch347.ko
license:        GPL
description:    USB to SPI/GPIO driver for CH347F/CH347T
author:         WCH
alias:          SPI/GPIO: CH347F/CH347T
srcversion:     61EFBC49B1223600F312B72
alias:          usb:v1A86p55DEd*dc*dsc*dp*ic*isc*ip*in04*
alias:          usb:v1A86p55DBd*dc*dsc*dp*ic*isc*ip*in02*
depends:
name:           spi_ch347
vermagic:       5.10.17-v7l+ SMP mod_unload modversions ARMv7 p2v8
parm:           usb_timeout:USB Read/Write Timeout (if 0, the wait is forever)(default: 5000 ms (int)
parm:           spi_bus_num:SPI master bus number (if negative, dynamic allocation)(default: -1) (int)
parm:           gpio_base:first GPIO number handled by GPIO controller driver (if negative, dynamic allocation)
(default: -1) (int)
```

If you are using an older version of CH347, you may need to uncomment the following:

```
//#define CH347_USB_BULK_LEN_MAX        510
```

In CH347T with revision number 1.40, USB transfers failed if the maximum length of bulk messages was not limited to 510 bytes.

© Copyright Newracom 2025. All rights reserved.
Confidential

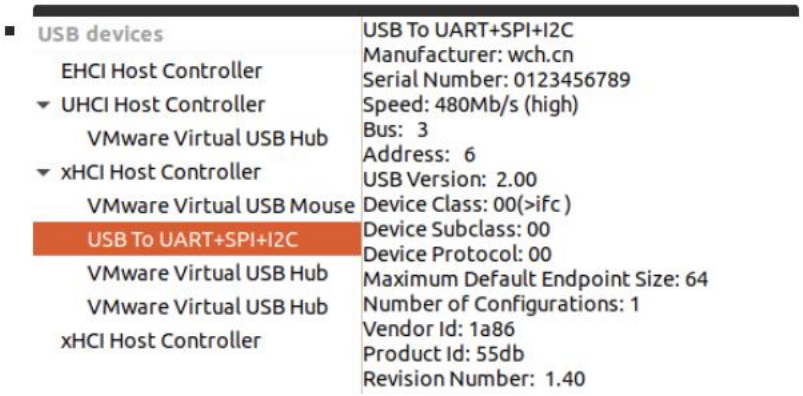


```
[   68.141407] spi-ch347 1-1.4:1.2: ch347_usb_probe: CH347T SPI (Mode 1)
[   68.143690] spi-ch347 1-1.4:1.2: ch347_spi_probe: SPI master connected to SPI bus 3
[   68.143881] usbcore: registered new interface driver spi-ch347
[   77.919828] spi-ch347 1-1.4:1.2: ch347_spi_setup: chip_select=0 max_speed_hz=20000000 mode=0x0
[   77.919839] spi-ch347 1-1.4:1.2: ch347_spi_setup: scale=1, clock=2 (15000000)
[   77.920836] spi spi3.0: SPI Device Created (bus_num:3, cs_num:0, irq_num:-1, max_speed:20000000
[   77.971709] nrc80211 spi3.0: SPI probing. chip_id:7394 modem_id:00000001 status:1
[   77.971720] nrc80211 spi3.0: Newracom IEEE802.11 C-SPI: chipid=7394, sw_id=1020716, board_id=DEB09757  fw_n
ame=uni_s1g.bin bd_name=nrc7394_bd.dat
[   77.972522] nrc80211 spi3.0: TWT is disabled
[   77.972530] nrc80211 spi3.0: Configuration of H/W Dependent Setting : 7394
[   77.972537] nrc80211 spi3.0: - HW_QUEUES: 11
[   77.972544] nrc80211 spi3.0: - WoWLAN Pattern num: 2
[   77.973727] nrc80211 spi3.0: start FW 383
[   77.974407] spi-ch347 1-1.4:1.2: ch347_usb_read: cmd=0xC2 len=510/1051 ret=-71 timeout=5000
[   77.974416] nrc80211 spi3.0: SPI transfer failed: -71
[   77.974466] spi_master spi3: failed to transfer one message from queue
[   77.974486] nrc80211 spi3.0: [_c_spi_write] writing spi failed(-71).
[   77.974620] spi-ch347 1-1.4:1.2: ch347_usb_read: cmd=0xC2 len=5/11 ret=-71 timeout=5000
[   77.974629] nrc80211 spi3.0: SPI transfer failed: -71
[   77.974675] spi_master spi3: failed to transfer one message from queue
[   77.974694] nrc80211 spi3.0: [_c_spi_read_regs] reading spi failed(-71).
[   77.974718] ------------[ cut here ]------------
[   77.974731] kernel BUG at /home/pi/nrc_pkg/sw/driver/nrc/nrc-fw.c:126!
[   77.974740] Internal error: Oops - BUG: 0 [#1] SMP ARM
```

NOTE:

To integrate the spi-ch347 driver into the Linux kernel source:

i. Copy the drivers/spi/spi-ch347 directory to the kernel source.

   $ cd ${CH347_USB_SPI_SOURCE_TOP}

   $ cp -a drivers/spi/spi-ch347 ${KERNEL_SOURCE_TOP}/drivers/spi

ii. Add the contents of Kconfig and Makefile under drivers/spi to the kernel source.

   $ vim ${KERNEL_SOURCE_TOP}/drivers/spi/Kconfig

© Copyright Newracom 2025. All rights reserved.
Confidential

```
config SPI_MASTER
#   bool "SPI Master Support"
    bool
    default SPI
    help
      If your system has an master-capable SPI controller (which
      provides the clock and chipselect), you can enable that
      controller and the protocol drivers for the SPI slave chips
      that are connected.

if SPI_MASTER

config SPI_MEM
    bool "SPI memory extension"
    help
      Enable this option if you want to enable the SPI memory extension.
      This extension is meant to simplify interaction with SPI memories
      by providing a high-level interface to send memory-like commands.

comment "SPI Master Controller Drivers"

config SPI_CH347
    tristate "CH347 SPI controller"
    depends on USB || GPIOLIB || COMPILE_TEST
    help
      CH347 supports UART/SPI/I2C/JTAG/GPIO.
      This driver supports SPI/GPIO.
```

$ vim ${KERNEL_SOURCE_TOP}/drivers/spi/Makefile

```
obj-$(CONFIG_SPI_AMD)           += spi-amd.o
obj-$(CONFIG_SPI_CH347) += spi-ch347/

# SPI slave protocol handlers
obj-$(CONFIG_SPI_SLAVE_TIME)        += spi-slave-time.o
obj-$(CONFIG_SPI_SLAVE_SYSTEM_CONTROL)  += spi-slave-system-control.o
```

iii. Execute Kernel Configuration Menu.

$ cd ${KERNEL_SOURCE_TOP}

$ make menuconfig

Kernel Configuration Menu : Device Drivers -> SPI support

```
--- SPI support
[ ]   Debug support for SPI drivers
-*-   SPI memory extension
      *** SPI Master Controller Drivers ***
< >   CH347 SPI controller (NEW)
<M>   Altera SPI Controller
```

© Copyright Newracom 2025. All rights reserved.
Confidential

4.2 Loading the spi-ch347 driver into the kernel.

$ cd ${CH347_USB_SPI_SRC_TOP}

$ ./Insmod.sh -h

```
pi@raspberrypi:~/ch347-usb-spi $ ./Insmod.sh -h
Usage: ./Insmod.sh [options]
Options:
  -s     set the SPI bus number (default : 3)
  -h     print this help
```

$ ./Insmod.sh [options]

```
pi@raspberrypi:~/ch347-usb-spi $ ./Insmod.sh
sudo insmod ./drivers/spi/spi-ch347/spi-ch347.ko spi_bus_num=3
export  gpiochip0  gpiochip504  unexport
spi0  spi3
```

$ lsmod

```
pi@raspberrypi:~/ch347-usb-spi $ lsmod
Module                  Size  Used by
spi_ch347              20480  0
```

$ dmesg

```
usb 1-1.4: new high-speed USB device number 4 using xhci_hcd
usb 1-1.4: New USB device found, idVendor=1a86, idProduct=55db, bcdDevice= 4.41
usb 1-1.4: New USB device strings: Mfr=1, Product=2, SerialNumber=3
usb 1-1.4: Product: USB To UART+SPI+I2C
usb 1-1.4: Manufacturer: wch.cn
usb 1-1.4: SerialNumber: 0123456789
spi_ch347: loading out-of-tree module taints kernel.
spi-ch347 1-1.4:1.2: ch347_usb_probe: CH347T SPI+GPIO (Mode 1)
spi-ch347 1-1.4:1.2: ch347_spi_probe: SPI master connected to SPI bus 3
usbcore: registered new interface driver spi-ch347
```

NOTE:

When the CH347 is connected to a Linux host, the cdc_acm (USB Communication Device Class Abstract Control Model) driver is automatically loaded into the kernel. If CH347 UART is not needed, the cdc_acm driver can be removed from the kernel as follows:

$ dmesg

© Copyright Newracom 2025. All rights reserved.
Confidential

```
usb 1-1.4: new high-speed USB device number 3 using xhci_hcd
usb 1-1.4: New USB device found, idVendor=1a86, idProduct=55db, bcdDevice= 4.41
usb 1-1.4: New USB device strings: Mfr=1, Product=2, SerialNumber=3
usb 1-1.4: Product: USB To UART+SPI+I2C
usb 1-1.4: Manufacturer: wch.cn
usb 1-1.4: SerialNumber: 0123456789
cdc_acm 1-1.4:1.0: ttyACM0: USB ACM device
usbcore: registered new interface driver cdc_acm
cdc_acm: USB Abstract Control Model driver for USB modems and ISDN adapters
```

$ lsmod

```
pi@raspberrypi:~ $ lsmod
Module                  Size  Used by
cdc_acm                24576  0
```

$ sudo rmmod cdc_acm

To blacklist the cdc_acm module:

$ sudo vim /etc/modprobe.d/blacklist-cdc-acm.conf

```
blacklist cdc_acm
```

4.3 Checking the SPI bus number.

If the module parameter 'spi_bus_num' is negative, the SPI bus number is assigned while the spi-ch347 driver is registered into the kernel.

```
pi@raspberrypi:~/ch347-usb-spi $ ls /sys/class/spi_master/
spi0
pi@raspberrypi:~/ch347-usb-spi $ ./Insmod.sh -s -1
sudo insmod ./drivers/spi/spi-ch347/spi-ch347.ko spi_bus_num=-1
export  gpiochip0  gpiochip504  unexport
spi0  spi3
```

So, the user should check the SPI bus number before loading the nrc7394 driver into the kernel.

If the SPI bus number is 3, the device information can be found in the /sys/class/spi_master.

$ cat /sys/class/spi_master/spi3/device/modalias

```
pi@raspberrypi:~/ch347-usb-spi $ cat /sys/class/spi_master/spi3/device/modalias
usb:v1A86p55DBd0441dc00dsc00dp00icFFisc00ip00in02
```

© Copyright Newracom 2025. All rights reserved.
Confidential

4.4 Loading the nrc7394 driver into the kernel.

Open the start.py file and set the variable “ch347_usb_spi”.

ch347_usb_spi	Module Parameter	Default Value
0 (Unused)	hif_speed	20,000,000 (Hz)
	spi_bus_num	0
	spi_cs_num	0
	spi_gpio_irq	5
	spi_polling_interval	0
1 (CSPI Registers Polling)	hif_speed	20,000,000 (Hz)
	spi_bus_num	3
	spi_cs_num	0
	spi_gpio_irq	-1
	spi_polling_interval	50 (msec)

Table 4.1 NRC7394 SPI related module parameters

$ cd ~/nrc_pkg/script

$ vim start.py

Set the ch347_usb_spi to 1.

```
################################################################################
# CSPI Conf. (Default)
spi_clock    = 20000000       # SPI Master Clock Frequency
spi_bus_num  = 0              # SPI Master Bus Number
spi_cs_num   = 0              # SPI Master Chipselect Number
spi_gpio_irq = 5              # NRC-CSPI EIRQ GPIO Number
                              # BBB is 60 recommanded.
spi_polling_interval = 0      # NRC-CSPI Polling Interval (msec)

#
# NOTE:
#  - NRC-CSPI EIRQ Input Interrupt: spi_gpio_irq >= 0 and spi_polling_interval <= 0
#  - NRC-CSPI EIRQ Input Polling  : spi_gpio_irq >= 0 and spi_polling_interval > 0
#  - NRC-CSPI Registers Polling   : spi_gpio_irq < 0 and spi_polling_interval > 0
#
#-------------------------------------------------------------------------------#
# ft232h usb-spi conf. (ft232h cspi conf)
ft232h_usb_spi = 0            # ftdi ft232h usb-spi bridge
                              # 0 : unused
                              # 1 : nrc-cspi_eirq input polling
                              # 2 : nrc-cspi registers polling
# ch347 usb-spi conf. (ch347 cspi conf)
ch347_usb_spi = 1             # wch ch347 usb-spi bridge
                              # 0 : unused
                              # 1 : nrc-cspi registers polling
################################################################################
```

© Copyright Newracom 2025. All rights reserved.
Confidential

Change the following parameters if necessary.

```
def ch347_usb():
    # Re-define SPI parameters for ch347_usb_spi
    # ch347_usb_spi
    global spi_clock, spi_bus_num, spi_gpio_irq, spi_cs_num, spi_polling_interval
    print("[*] use ch347_usb_spi")
    spi_bus_num = 3
    spi_gpio_irq = -1
    if int(spi_clock) > 20000000:
        spi_clock = 20000000
    if int(spi_cs_num) != 0:
        spi_cs_num = 0
    if int(spi_polling_interval) <= 0:
        spi_polling_interval = 50
```

- spi_bus_num
- spi_clock
- spi_polling_interval

The CH347 supports SPI clock frequencies up to 60MHz. However, the NRC7394 does not support SPI clock frequencies higher than 20MHz.

When running as an STA in open mode on US channel:

$ ./start.py 0 0 US

For more information, refer to the **UG-7394-001-EVK User Guide (Host Mode).pdf** file.

4.5 Removing the nrc7394 driver from the kernel.

$ cd ~/nrc_pkg/script

$ ./stop.py

4.6 Removing the spi-ch347 driver from the kernel.

$ cd ${CH347_USB_SPI_SRC_TOP}

$ ./Rmmod.sh

```
pi@raspberrypi:~/ch347-usb-spi $ ./Rmmod.sh
export  gpiochip0  gpiochip504  unexport
spi0
```

© Copyright Newracom 2025. All rights reserved.
Confidential

5 Iperf throughput

Below are the results of measuring data throughput between an AP and an STA using the CH347T. The results were measured by running iperf3.

Protocol	Data Throughput	
	STA to AP	STA from AP
TCP	5.20 Mbps	5.20 Mbps
UDP	6.32 Mbps	6.31 Mbps

5.1 Iperf server (AP)

```
pi@raspberrypi:~ $ iperf3 -s
-----------------------------------------------------------
Server listening on 5201
-----------------------------------------------------------
Accepted connection from 192.168.200.43, port 58544
[  5] local 192.168.200.1 port 5201 connected to 192.168.200.43 port 58546
[ ID] Interval           Transfer     Bitrate
[  5]   0.00-1.00   sec   546 KBytes  4.47 Mbits/sec
[  5]   1.00-2.00   sec   653 KBytes  5.35 Mbits/sec
[  5]   2.00-3.00   sec   631 KBytes  5.17 Mbits/sec
[  5]   3.00-4.00   sec   666 KBytes  5.46 Mbits/sec
[  5]   4.00-5.00   sec   632 KBytes  5.18 Mbits/sec
[  5]   5.00-6.00   sec   626 KBytes  5.13 Mbits/sec
[  5]   6.00-7.00   sec   663 KBytes  5.43 Mbits/sec
[  5]   7.00-8.00   sec   652 KBytes  5.34 Mbits/sec
[  5]   8.00-9.00   sec   649 KBytes  5.32 Mbits/sec
[  5]   9.00-10.00  sec   619 KBytes  5.07 Mbits/sec
[  5]  10.00-10.08  sec  52.3 KBytes  5.67 Mbits/sec
- - - - - - - - - - - - - - - - - - - - - - - - -
[ ID] Interval           Transfer     Bitrate
[  5]   0.00-10.08  sec  6.24 MBytes  5.20 Mbits/sec                  receiver
-----------------------------------------------------------
Server listening on 5201
-----------------------------------------------------------
Accepted connection from 192.168.200.43, port 58548
[  5] local 192.168.200.1 port 5201 connected to 192.168.200.43 port 58550
[ ID] Interval           Transfer     Bitrate         Retr  Cwnd
[  5]   0.00-1.00   sec   854 KBytes  7.00 Mbits/sec    0   83.4 KBytes
[  5]   1.00-2.00   sec   636 KBytes  5.21 Mbits/sec    0   91.9 KBytes
[  5]   2.00-3.00   sec   636 KBytes  5.21 Mbits/sec    0   96.2 KBytes
```

© Copyright Newracom 2025. All rights reserved.
Confidential

```
[  5]   3.00-4.00   sec   636 KBytes   5.21 Mbits/sec    0    96.2 KBytes
[  5]   4.00-5.00   sec   636 KBytes   5.21 Mbits/sec    0    96.2 KBytes
[  5]   5.00-6.00   sec   636 KBytes   5.21 Mbits/sec    0     117 KBytes
[  5]   6.00-7.00   sec   636 KBytes   5.21 Mbits/sec    0     117 KBytes
[  5]   7.00-8.00   sec   636 KBytes   5.21 Mbits/sec    0     117 KBytes
[  5]   8.00-9.00   sec   636 KBytes   5.21 Mbits/sec    0     117 KBytes
[  5]   9.00-10.00  sec   636 KBytes   5.21 Mbits/sec    0     117 KBytes
- - - - - - - - - - - - - - - - - - - - - - - - -
[ ID] Interval           Transfer     Bitrate         Retr
[  5]   0.00-10.04  sec  6.43 MBytes  5.37 Mbits/sec    0             sender
-----------------------------------------------------------
Server listening on 5201
-----------------------------------------------------------
Accepted connection from 192.168.200.43, port 58552
[  5] local 192.168.200.1 port 5201 connected to 192.168.200.43 port 58470
[ ID] Interval           Transfer     Bitrate         Jitter    Lost/Total Datagrams
[  5]   0.00-1.00   sec   711 KBytes   5.83 Mbits/sec   2.757 ms   0/503 (0%)
[  5]   1.00-2.00   sec   805 KBytes   6.59 Mbits/sec   3.811 ms   0/569 (0%)
[  5]   2.00-3.00   sec   779 KBytes   6.38 Mbits/sec   3.084 ms   0/551 (0%)
[  5]   3.00-4.00   sec   768 KBytes   6.29 Mbits/sec   2.883 ms   0/543 (0%)
[  5]   4.00-5.00   sec   707 KBytes   5.79 Mbits/sec   2.863 ms   0/500 (0%)
[  5]   5.00-6.00   sec   758 KBytes   6.21 Mbits/sec   3.196 ms   0/536 (0%)
[  5]   6.00-7.00   sec   812 KBytes   6.65 Mbits/sec   2.944 ms   0/574 (0%)
[  5]   7.00-8.00   sec   786 KBytes   6.44 Mbits/sec   3.278 ms   0/556 (0%)
[  5]   8.00-9.00   sec   773 KBytes   6.34 Mbits/sec   2.537 ms   0/547 (0%)
[  5]   9.00-10.00  sec   812 KBytes   6.65 Mbits/sec   3.209 ms   0/574 (0%)
[  5]  10.00-10.09  sec  72.1 KBytes   6.46 Mbits/sec   3.200 ms   0/51 (0%)
- - - - - - - - - - - - - - - - - - - - - - - - -
[ ID] Interval           Transfer     Bitrate         Jitter    Lost/Total Datagrams
[  5]   0.00-10.09  sec  7.60 MBytes   6.32 Mbits/sec   3.200 ms   0/5504 (0%)   receiver
-----------------------------------------------------------
Server listening on 5201
-----------------------------------------------------------
Accepted connection from 192.168.200.43, port 58554
[  5] local 192.168.200.1 port 5201 connected to 192.168.200.43 port 37062
[ ID] Interval           Transfer     Bitrate         Total Datagrams
[  5]   0.00-1.00   sec   848 KBytes   6.95 Mbits/sec   600
[  5]   1.00-2.00   sec   735 KBytes   6.02 Mbits/sec   520
[  5]   2.00-3.00   sec   721 KBytes   5.91 Mbits/sec   510
[  5]   3.00-4.00   sec   792 KBytes   6.49 Mbits/sec   560
[  5]   4.00-5.00   sec   806 KBytes   6.60 Mbits/sec   570
[  5]   5.00-6.00   sec   764 KBytes   6.26 Mbits/sec   540
[  5]   6.00-7.00   sec   820 KBytes   6.72 Mbits/sec   580
[  5]   7.00-8.00   sec   778 KBytes   6.37 Mbits/sec   550
[  5]   8.00-9.00   sec   764 KBytes   6.26 Mbits/sec   540
[  5]   9.00-10.00  sec   735 KBytes   6.02 Mbits/sec   520
[  5]  10.00-10.06  sec  56.6 KBytes   7.60 Mbits/sec   40
```

© Copyright Newracom 2025. All rights reserved.
Confidential

```
- - - - - - - - - - - - - - - - - - - - - - - - -
[ ID] Interval           Transfer     Bitrate         Jitter    Lost/Total Datagrams
[  5]   0.00-10.06  sec  7.64 MBytes  6.37 Mbits/sec  0.000 ms  0/5530 (0%)  sender
-----------------------------------------------------------
Server listening on 5201
-----------------------------------------------------------
```

5.2 Iperf client (STA)

```
pi@raspberrypi:~ $ iperf3 -c 192.168.200.1
Connecting to host 192.168.200.1, port 5201
[  5] local 192.168.200.43 port 58546 connected to 192.168.200.1 port 5201
[ ID] Interval           Transfer     Bitrate         Retr  Cwnd
[  5]   0.00-1.00   sec   741 KBytes  6.07 Mbits/sec    0   82.0 KBytes
[  5]   1.00-2.00   sec   764 KBytes  6.26 Mbits/sec    0   94.7 KBytes
[  5]   2.00-3.00   sec   636 KBytes  5.21 Mbits/sec    0   94.7 KBytes
[  5]   3.00-4.00   sec   636 KBytes  5.21 Mbits/sec    0    105 KBytes
[  5]   4.00-5.00   sec   636 KBytes  5.21 Mbits/sec    0    109 KBytes
[  5]   5.00-6.00   sec   636 KBytes  5.21 Mbits/sec    0    109 KBytes
[  5]   6.00-7.00   sec   636 KBytes  5.21 Mbits/sec    0    109 KBytes
[  5]   7.00-8.00   sec   636 KBytes  5.21 Mbits/sec    0    109 KBytes
[  5]   8.00-9.00   sec   636 KBytes  5.21 Mbits/sec    0    109 KBytes
[  5]   9.00-10.00  sec   636 KBytes  5.21 Mbits/sec    0    109 KBytes
- - - - - - - - - - - - - - - - - - - - - - - - -
[ ID] Interval           Transfer     Bitrate         Retr
[  5]   0.00-10.00  sec  6.44 MBytes  5.40 Mbits/sec    0             sender
[  5]   0.00-10.08  sec  6.24 MBytes  5.20 Mbits/sec                  receiver

iperf Done.
pi@raspberrypi:~ $ iperf3 -c 192.168.200.1 -R
Connecting to host 192.168.200.1, port 5201
Reverse mode, remote host 192.168.200.1 is sending
[  5] local 192.168.200.43 port 58550 connected to 192.168.200.1 port 5201
[ ID] Interval           Transfer     Bitrate
[  5]   0.00-1.00   sec   605 KBytes  4.96 Mbits/sec
[  5]   1.00-2.00   sec   641 KBytes  5.25 Mbits/sec
[  5]   2.00-3.00   sec   643 KBytes  5.27 Mbits/sec
[  5]   3.00-4.00   sec   590 KBytes  4.83 Mbits/sec
[  5]   4.00-5.00   sec   632 KBytes  5.18 Mbits/sec
[  5]   5.00-6.00   sec   653 KBytes  5.35 Mbits/sec
[  5]   6.00-7.00   sec   649 KBytes  5.32 Mbits/sec
[  5]   7.00-8.00   sec   638 KBytes  5.22 Mbits/sec
[  5]   8.00-9.00   sec   642 KBytes  5.26 Mbits/sec
[  5]   9.00-10.00  sec   649 KBytes  5.32 Mbits/sec
- - - - - - - - - - - - - - - - - - - - - - - - -
[ ID] Interval           Transfer     Bitrate         Retr
```

© Copyright Newracom 2025. All rights reserved.
Confidential

```
[  5]   0.00-10.04  sec  6.43 MBytes  5.37 Mbits/sec    0             sender
[  5]   0.00-10.00  sec  6.19 MBytes  5.20 Mbits/sec                  receiver

iperf Done.
pi@raspberrypi:~ $ iperf3 -c 192.168.200.1 -u -b M
Connecting to host 192.168.200.1, port 5201
[  5] local 192.168.200.43 port 58470 connected to 192.168.200.1 port 5201
[ ID] Interval           Transfer     Bitrate         Total Datagrams
[  5]   0.00-1.00   sec   834 KBytes  6.83 Mbits/sec  590
[  5]   1.00-2.00   sec   806 KBytes  6.60 Mbits/sec  570
[  5]   2.00-3.00   sec   764 KBytes  6.26 Mbits/sec  540
[  5]   3.00-4.00   sec   778 KBytes  6.37 Mbits/sec  550
[  5]   4.00-5.00   sec   693 KBytes  5.68 Mbits/sec  490
[  5]   5.00-6.00   sec   764 KBytes  6.26 Mbits/sec  540
[  5]   6.00-7.00   sec   806 KBytes  6.60 Mbits/sec  570
[  5]   7.00-8.00   sec   806 KBytes  6.60 Mbits/sec  570
[  5]   8.00-9.00   sec   778 KBytes  6.37 Mbits/sec  550
[  5]   9.00-10.00  sec   820 KBytes  6.72 Mbits/sec  580
- - - - - - - - - - - - - - - - - - - - - - - - -
[ ID] Interval           Transfer     Bitrate         Jitter    Lost/Total Datagrams
[  5]   0.00-10.00  sec  7.66 MBytes  6.43 Mbits/sec  0.000 ms  0/5550 (0%)  sender
[  5]   0.00-10.09  sec  7.60 MBytes  6.32 Mbits/sec  3.200 ms  0/5504 (0%)  receiver

iperf Done.
pi@raspberrypi:~ $ iperf3 -c 192.168.200.1 -u -b M -R
Connecting to host 192.168.200.1, port 5201
Reverse mode, remote host 192.168.200.1 is sending
[  5] local 192.168.200.43 port 37062 connected to 192.168.200.1 port 5201
[ ID] Interval           Transfer     Bitrate         Jitter    Lost/Total Datagrams
[  5]   0.00-1.00   sec   792 KBytes  6.49 Mbits/sec  2.706 ms  0/560 (0%)
[  5]   1.00-2.00   sec   740 KBytes  6.06 Mbits/sec  4.682 ms  0/523 (0%)
[  5]   2.00-3.00   sec   718 KBytes  5.88 Mbits/sec  3.552 ms  0/508 (0%)
[  5]   3.00-4.00   sec   788 KBytes  6.45 Mbits/sec  2.665 ms  0/557 (0%)
[  5]   4.00-5.00   sec   798 KBytes  6.53 Mbits/sec  3.163 ms  0/564 (0%)
[  5]   5.00-6.00   sec   779 KBytes  6.38 Mbits/sec  3.040 ms  0/551 (0%)
[  5]   6.00-7.00   sec   798 KBytes  6.53 Mbits/sec  2.479 ms  0/564 (0%)
[  5]   7.00-8.00   sec   800 KBytes  6.56 Mbits/sec  3.064 ms  0/566 (0%)
[  5]   8.00-9.00   sec   754 KBytes  6.17 Mbits/sec  2.405 ms  0/533 (0%)
[  5]   9.00-10.00  sec   737 KBytes  6.04 Mbits/sec  4.742 ms  0/521 (0%)
- - - - - - - - - - - - - - - - - - - - - - - - -
[ ID] Interval           Transfer     Bitrate         Jitter    Lost/Total Datagrams
[  5]   0.00-10.06  sec  7.64 MBytes  6.37 Mbits/sec  0.000 ms  0/5530 (0%)  sender
[  5]   0.00-10.00  sec  7.52 MBytes  6.31 Mbits/sec  4.742 ms  0/5447 (0%)  receiver

iperf Done.
```

© Copyright Newracom 2025. All rights reserved.
Confidential

6 Revision history

Revision No	Date	Comments
Ver 1.0	08/27/2025	Initial version
Ver 1.1	09/16/2025	In older versions of CH347, the maximum length of a bulk message is 510 bytes.

© Copyright Newracom 2025. All rights reserved.
Confidential