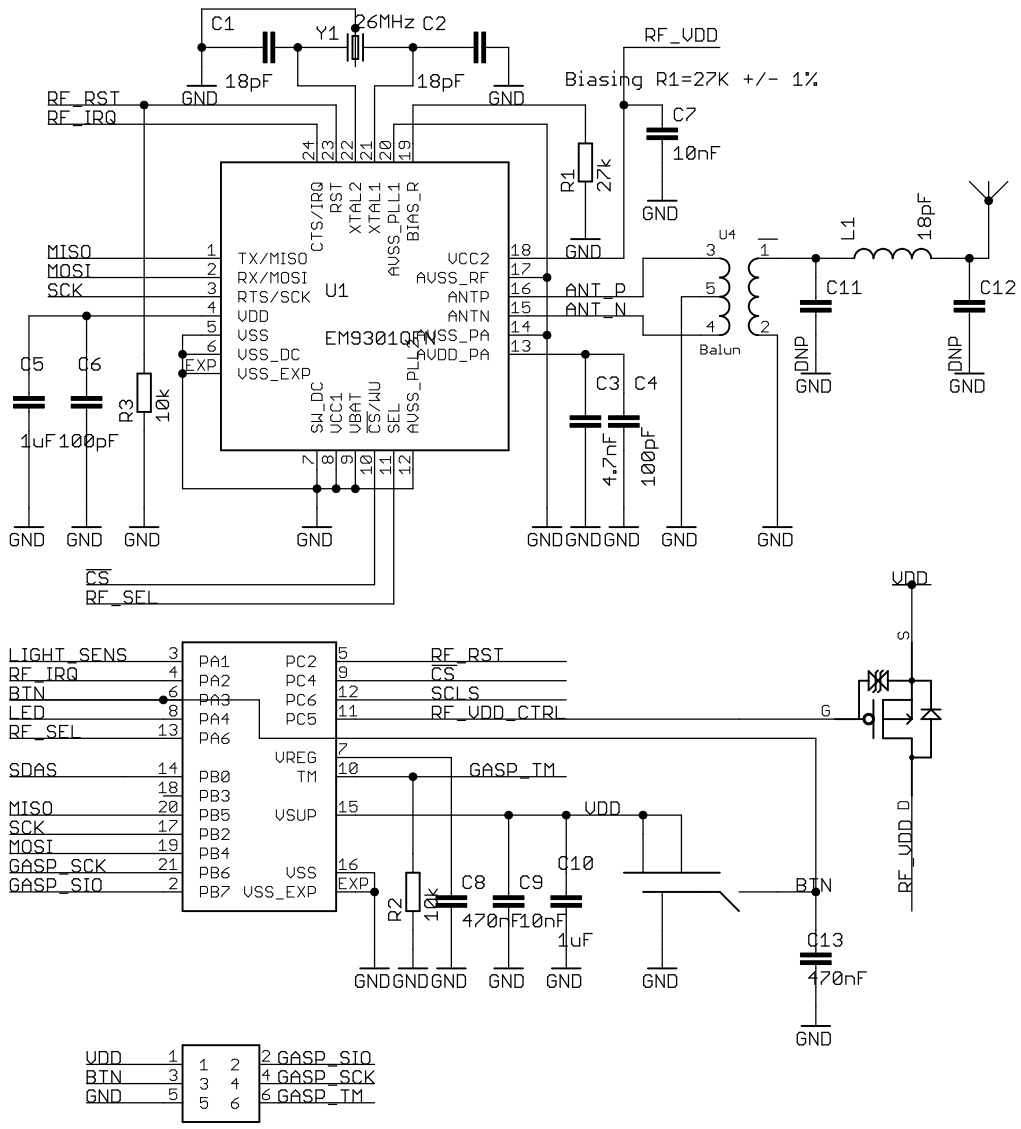

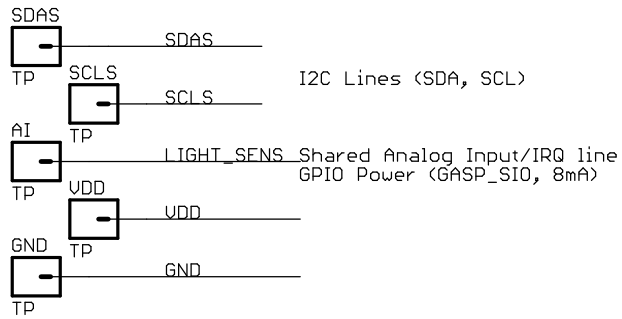

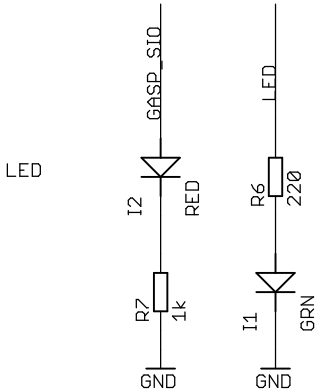

BASE EM BEACON

TITLE: emBeacon_rev04

Document Number:

REV:

Date: 7/30/2014 10:52:32 AM

Sheet: 1/1