Re-defining Architecture

BHARTI ENTERPRISES

Sales Office :
2-4-337/338, Office No.1, Vijaya Vishnu Residency, Ramgopalpet,
M.G. Road, Secunderabad - 03 T.S., India.

Ph : 98483 90107 | 98852 71152
E-mail : bhartienterprises72@gmail.com

GSTIN NO. 36AGWPB5456D1Z9

OYSTO®
PARTITIONS
Re-defining Architecture

MODULAR GLASS PARTITION
ARCHITECTURAL HARDWARE
ALUMINUM SKIRTING
CORNER GUARDS | DECORATIVE TRIMS

ABOUT US

OYSTO is among the pioneering suppliers of Architectural Products and Service for interior spaces. Our products are essential elements for modern, beautiful and functional interior environments. We assist Architects and Designers by providing a wide range of solutions for each individual project. OYSTO 'Modular Glass Partition Systems are a suitable solution for creating new commercial, hospital and industries space arrangements and separating work places, taking into consideration the changing needs of office premises. OYSTO systems have a modular design which makes it easy to install and if necessary re-arrange or move the partition. To give a consistent and furnished look to the workspace OYSTO also provides aluminum skirting,

interior accessories like corner guards, hat profiles, step nose, leveling profiles and also solid and glass door hardware which go hand in hand with our movable partition systems both aesthetically and quality-wise to provide a awless and elegant end product. Beside our existing systems we continuously research the market for any application or requirement which can set us apart and benet us as well as the end customers. OYSTO is also committed for the research and application of energy conservation, acoustics, environment protection & in creating a comfortable surrounding for all its clients.

APPLICATIONS

Modular Glass Partition Systems, Aluminum Skirting and other interior accessories and door hardware offered by OYSTO are widely used for optimization and compartmentalization of work-space across various, professional fields such as Corporate Offices, Bank, Research Laboratories . Educational Universities, Building Entrance Systems, Industrial Manufacturing Facilities, Conference/Convention Halls, Hospitals and Clinics. Besides these professional applications our products have also been applied in modern/smart home designs as home owners today are keen on non-convetional styles of home interior design.

Table Of Content

01 About Us

04 Sleek Series

06 Eco Series - 45

08 Side Glaze

10 Ultra Series - 80

12 Neon Series - 100

14 Wide Double Glaze (dual Track)

16 Style Door

18 Technical Panel

20 Glass Door Frames

22 Solid Door Frames

24-27 Architectural Hardware

28-31 **Aluminum Skirting / Corner Guards**
Hat Trims / Carpet Profiles / Accessories

SLEEK SERIES

OYSTO Sleek Series modular aluminum single glaze partition system offers a seamless look and lays more emphasis on the glass, it is recyclable and lightweight. It consists of a section dimension of 25mm x 25mm and is a clip on system for easy glass installation.

- Profile: 25mm x 25mm
- Silver/Black/other anodised finishes available
- Glass thickness supported: 10/ 12mm/ 11.5 laminated glass
- Single Glazing
- Acoustical Insulation: 32 dB
- Partition height upto 3000mm
- Curve profile available

SLEEK SERIES

ECO SERIES - 45

OYSTO ECO Series 45 Slim Glaze modular aluminum single glaze partition system offers a midway between a sleek and mechanically strong design while being very cost effective. It consists of a section dimension of 25x45mm, 25x42 mm and is a clip on system for easy glass installation.

- Profile: 25MM x 45MM, 25MM x 42MM
- Silver/Black/other anodised finishes available
- Can be used for door frame with cover or rebate profile
- Glass thickness supported: 8, 10 and 12 MM
- Single Glazing Acoustical Insulation: 32 dB
- Partition height upto 3000 MM
- Curve profile available

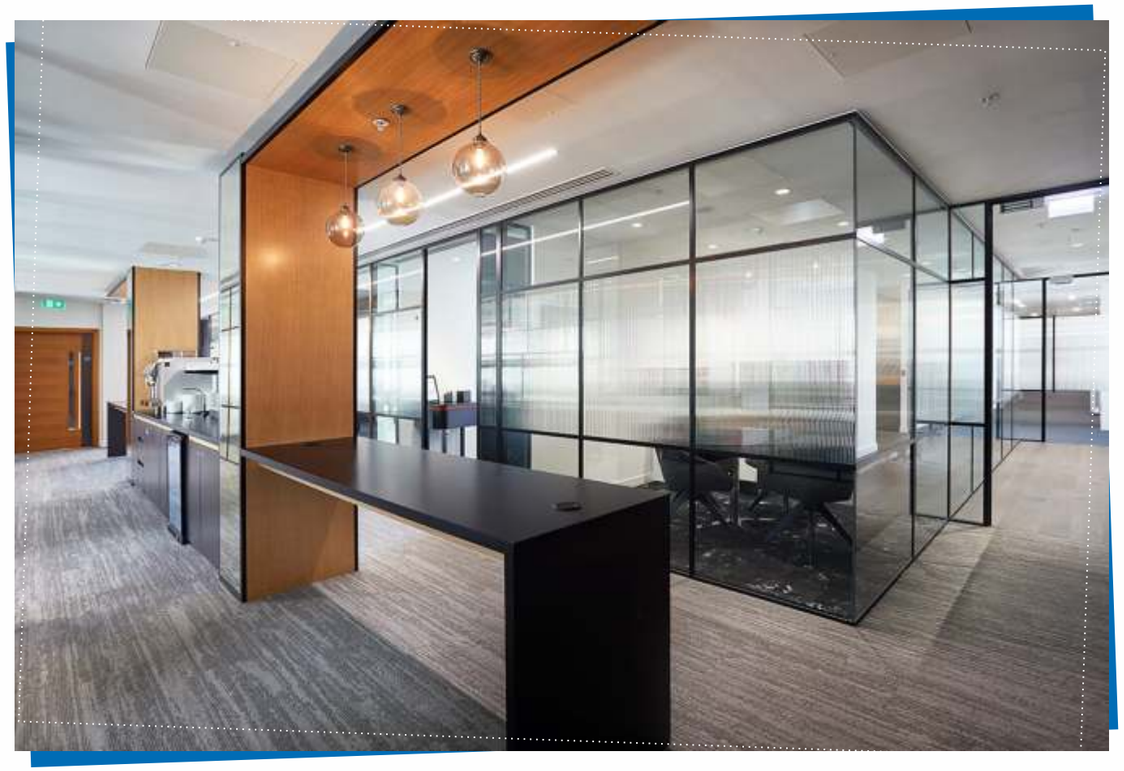

ECO SERIES - 45

SIDE GLAZE

OYSTO Side Glaze modular aluminum single glaze partition system is set apart from the rest as it is designed to place the partition glass at an offset from the centre which gives a seamless look from outside the cabin while offering good strength due to its width. It consists of a section dimension of 25x53 mm and is a clip on system for easy glass installation.

- Profile: 25x53 MM
- Silver/Black/other anodised finishes available
- Can be used for door frame with cover or rebate profile
- Glass thickness supported: 10 and 12 MM
- Single offset Glazing
- Acoustical Insulation: 32 dB
- Partition height upto 3000 MM

SIDE GLAZE

ULTRA SERIES - 80

OYSTO Ultra Series 80 modular aluminum single glaze partition system is designed to nullify any undulations that occur in gypsum partitions which are of 75mm width as an industry standard and tend to never be straight edged which steals from the aesthetics of the partition system. Due to its heavy prole the system offers brilliant rigidity. It consists of a section dimension of 25x80 mm and is a clip on system for easy glass installation.

- Profile: 25x80 MM
- Silver/Black/other anodised finishes available
- Can be used for door frame with cover or rebate profile
- Glass thickness supported: 8, 10 and 12 MM
- Single Glazing Acoustical Insulation: 32 dB
- Partition height upto 3000 MM

ULTRA SERIES - 80

NEON SERIES - 100

OYSTO Neon Series 100 modular aluminum single glaze partition system offers the best rigidity and strength due to its heavy profile. It is also aesthetically pleasing due to the glass to profile ratio. It consists of a section dimension of 25x100 mm and is a clip on system for easy glass installation.

- Profile: 25x100 MM
- Silver/Black/other anodised finishes available
- Can be used for door frame with cover or rebate profile
- Glass thickness supported: 8, 10 and 12 MM
- Single Glazing Acoustical Insulation: 32 dB
- Partition height upto 3000 MM

NEON SERIES - 100

WIDE DOUBLE GLAZE-Neon Series (Dual Track)

OYSTO Wide Double Glaze (Dual Track) modular aluminum single glaze partition system offers high strength and rigidity. However its main purpose is to provide the best sound insulation by adding an extra layer of glass and also an air gap between the two glass layers. It consists of a section dimension of 25x100 mm dual track and is a clip on system for easier glass installation.

- Profile: 25x100 MM (Dual track)
- Silver/Black/other anodised finishes available
- Can be used for door frame with cover or rebate profile
- Glass thickness supported: 10 and 12 MM
- Double Glazing Acoustical Insulation: 40 dB
- Partition height upto 3000 MM

WIDE DOUBLE GLAZE-Neon Series (Dual Track)

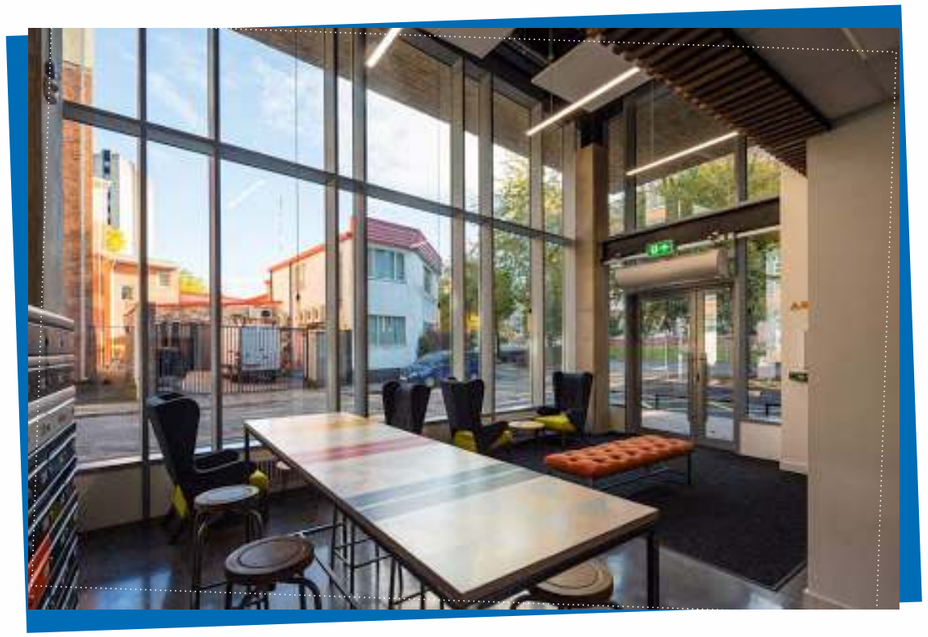

STYLE DOOR

OYSTO Style door frame is the new alternative for the aging solid wooden door with similar sound insulation abilities at a relatively better price point. It can be used as a swing as well as a sliding door. It consists of a 42x75 mm / 40x75 mm / 30x65 mm profile to be used as a four sided frame with a layer of glass within the frame.

- Profile: 42x75 mm / 40x75 mm / 30x65 mm
- Silver/Black/other anodised finishes available
- Single Glazed Door
- Glass thickness supported: 8 MM, 10 MM
- Acoustical Insulation: 30 dB
- Maximum single leaf dimensions: 3000(H) x 1000(W) MM

STYLE DOOR

TECHNICAL PANEL

OYSTO aluminum technical panel is used as a more aesthetic and cost effective alternate to traditional wooden and gypsum section. It is also used as an access control panel.

- Profile - 50 x 100 MM, 100 x 100 MM
- Silver/Black/other anodised finishes available
- Partition Height upto 3000 MM

TECHNICAL PANEL

GLASS DOOR FRAMES

OYSTO Ultra Series 80 modular aluminum single glaze partition system is designed to nullify any undulations that occur in gypsum partitions which are of 75mm width as an industry standard and tend to never be straight edged which steals from the aesthetics of the partition system. Due to its heavy prole the system offers brilliant rigidity. It consists of a section dimension of 82x44 mm.

- Profile: 82x44 MM
- Silver/Black/other anodised finishes available
- Partition height upto 3000 MM
- Use for Glass arch hinges doors

GLASS DOOR FRAMES

SOLID DOOR FRAMES

OYSTO Ultra Series 92 modular aluminum single glaze partition system is designed to nullify any undulations that occur in gypsum partitions which are of 100 mm width as an industry standard and tend to never be straight edged which steals from the aesthetics of the partition system. Due to its heavy prole the system offers brilliant rigidity. It consists of a section dimension of 92x44 mm.

- Profile: 92x44 MM
- Silver/Black/other anodised finishes available
- Can be used for only door frame/ style door with inbuilt rivet profile
- Partition height upto 3000 MM
- Use for solid flush doors up to 50 mm

SOLID DOOR FRAMES

ARCHITECTURAL HARDWARE

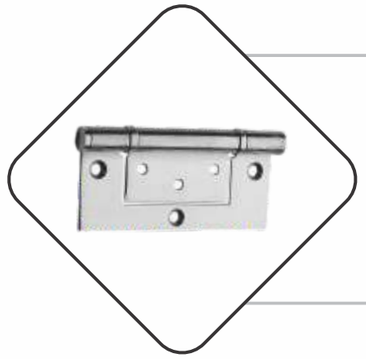

STAINLESS STEEL FLUSH HINGES

Material : Stainless Steel 304
Type : Ball Bearing
Size : 5 x 3 x 3
Finish : Stainless Steel / Black

STUDIO GLASS DOOR LOCK

Suitable for 10 / 12 MM glass
Material : Aluminum
Finish : Silver / Black Anodized

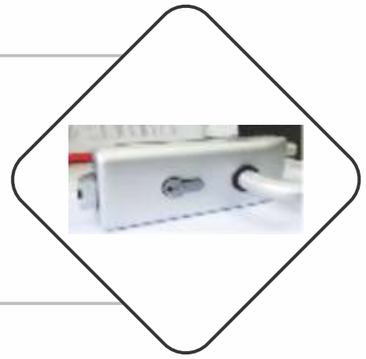

GLASS DOOR HINGES

Maximum door weight : 80kg
Maximum door size : 900 X 2400MM
Glass thickness : 10/12MM
Material : Aluminum
Finish : Silver Anodized/Black Color

GLASS PIVOT HINGES

Maximum door weight : 80kg
Maximum door size : 900 X 2400MM
Glass thickness : 10/12MM
Material : Aluminum
Finish : Silver Anodized/Black Color

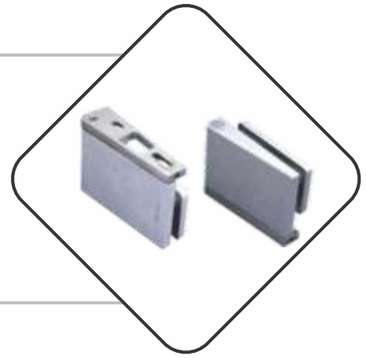

ARCHITECTURAL HARDWARE

OYSTO PARTITIONS

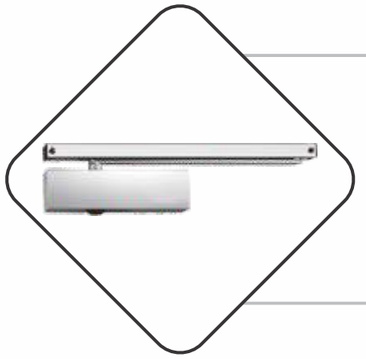

OVERHEAD DOOR CLOSER

Maximum door weight : 80kg
Maximum door size : 900 X 2400MM
Glass thickness : 10/12MM
Material : Aluminum
Finish : Silver Anodized/Black Color

SADDLE PLATE

Suitable for 10 / 12 MM glass
(Plate for mounting door closer on glass)
Material : Aluminum
Finish : Silver Anodized / Black Color

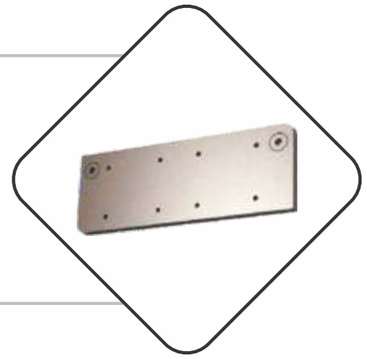

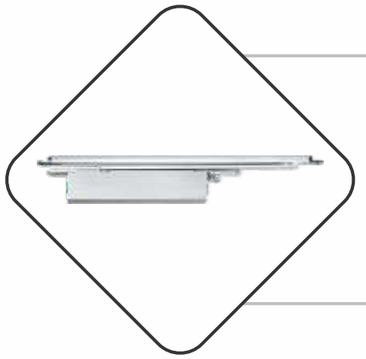

CONCEALED DOOR CLOSER

Maximum door weight : 80kg
Maximum door size : 900 X 2400MM
Glass thickness : 10/12MM
Material : Aluminum
Finish : Silver Anodized/Black Color

BOTTOM LOCK

Glass thickness : 10/12MM
Material : Stainless Steel
Finish : Satin Finish / Black Color

ARCHITECTURAL HARDWARE

NARROW STYLE MORTISE HANDLE

Material : Stainless Steel/Black Color
Finish : Satin Finish

NARROW STYLE MORTISE LOCK

Narrow style lock body for aluminum door with latch and double throw dead bolt

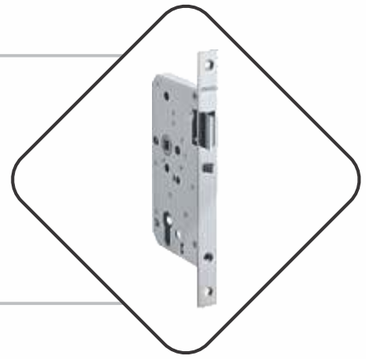

NARROW STYLE DEAD BOLT

Close body dead bolt for aluminum door/ wooden double throw dead bolt.
Finish : Silver Anodized/Black Color

CYLINDER

One side key one side knob with ultra key brass 60/70 MM

ARCHITECTURAL HARDWARE

OYSTO PARTITIONS

SLIDING ROLLER

Roller for glass and solid door.
Door weight upto 40 kgs.

OFFSET HANDLE

Material : Stainless Steel
Finish : Satin / Black Color
Length : 22 x 300 / 22x450 MM

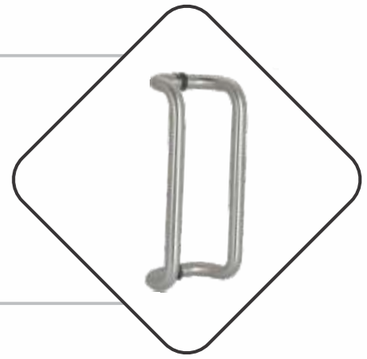

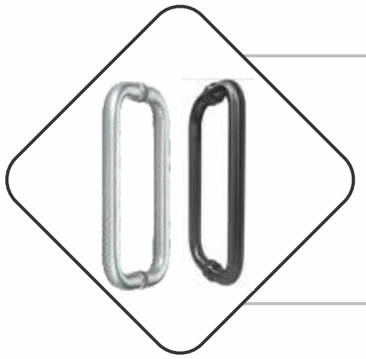

PULL HANDLE

Size : 25x300 / 25x450 MM
Material : Stainless Steel
Finish : Satin Finish / Black Color

PULL HANDLE

Size : 25x300 / 25x450 MM
Material : Stainless Steel
Finish : Satin Finish / Black Color

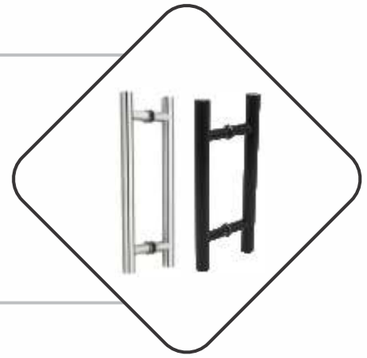

ALUMINUM SKIRTING

Finish : Silver / Black Anodized
Length : 3000 MM
Height : 50 MM / 75 MM /
100 MM / 150 MM

END CAP

Can be used with all types of corner
Finish : Grey / Black
Height : 100 MM

ALUMINUM TOE SKIRTING

Height : 60 MM / 80 MM
Length : 3000 MM
Finish : Silver Anodized

CLEAR L PROFILE

Suitable for L joining at a common point
3M tape to be use on profile for fixing glasses.
Finish : Transparent
Length : 3000 MM

ALUMINUM SKIRTING / CORNER GUARDS
HAT TRIMS / CARPET PROFILES / ACCESSORIES
OYSTO PARTITIONS

ALUMINUM I PROFILE

Suitable for joining two glasses (180) transparent tape to be use on profile for fixing glasses
Length : 3000 MM
Finish : Silver / Black Anodized

ALUMINUM T PROFILE

Suitable for joining three meeting at a common point, transparent tape to be use on profile for fixing glasses.
Finish : Silver / Black Anodized
Length : 3000 MM

ALUMINUM L PROFILE

Suitable for L joining at a common o point, (90) transparent tape to be use on profile for fixing glasses.
Finish : Silver / Black Anodized
Length : 3000 MM

ALUMINUM HAT PROFILE

Hat Aluminum profile are developed to make wall design visually attractive ideal for junction of 2 different materials
Length : 3000 MM
Width : 5 MM / 8 MM / 10 MM
Finish : Silver / Black Anodized

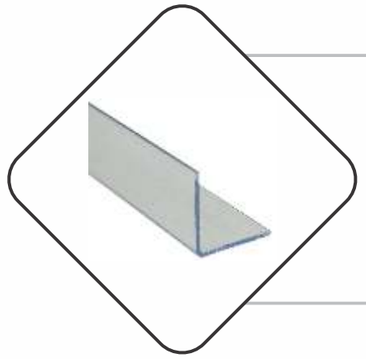

CLEAR L PROFILE

Suitable for L joining at a common point 3M tape to be use on profile for fixing glasses

CLEAR I PROFILE

Suitable for joining two glasses o (180) 3M tape to be use on profile for fixing glasses.

Length : 3000 MM

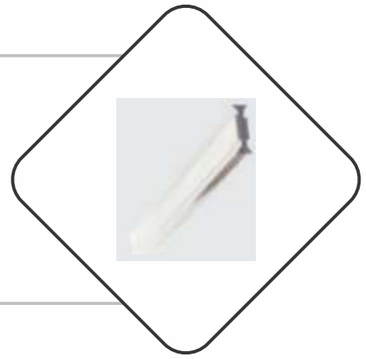

CLEAR T PROFILE

Suitable for joining three meeting at a common point, 3M tape to be use on profile for fixing glasses. CLEAR T PROFILE

Length : 3000 MM
Finish : Transparent

ALUMINUM CARPET PROFILE

Variable double sided profile which bend as per height of the flooring on either side.

Finish : Silver / Black Anodized
Length : 3000 MM Width : 28 MM

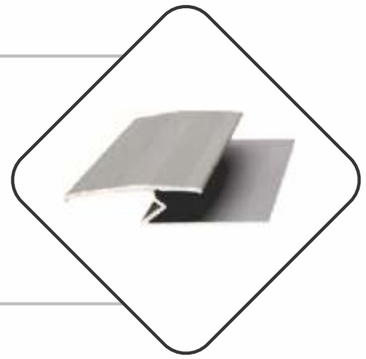

ALUMINUM SKIRTING / CORNER GUARDS
HAT TRIMS / CARPET PROFILES / ACCESSORIES
OYSTO PARTITIONS

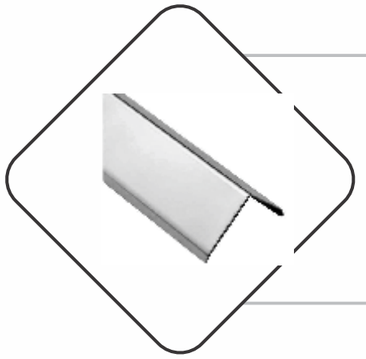

ALUMINUM L CORNER

Provide protection to edge of wall Corner. Economical option for edge of wall corners protection.

Finish : Silver / Black Anodized
Length : 3000 MM
Width :5x5/12x12/15x15/19x19/25x25/38x38

ALUMINUM CARPET EDGE PROFILE

Finish : Silver / Black Anodized
Length : 3000 MM
Size : 30 MM / 40 MM

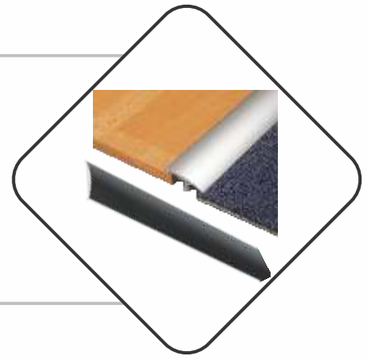

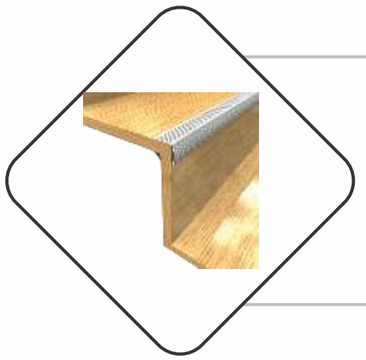

STAIR NOISE

Aluminum Profile Available in a range of Size 3000 MM 24 MM X 9 MM

ALUMINUM STAIR NOSE

Stair nose made for all types of staircase to prevent slipping and skirting

Finish : Silver Anodized/Color options
Length : 2700 MM
Size : 50 x 18 MM

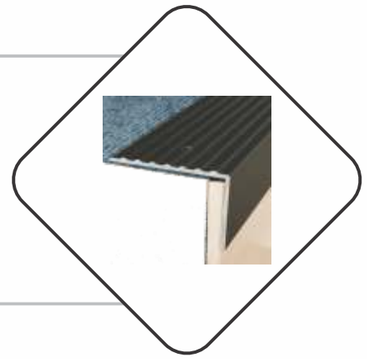

OYSTO®
PARTITIONS
Re-defining Architecture

Re-defining Architecture

Thank You