STANDARD CUTTING HEAD DESCRIPTION

3K — 030 240 U

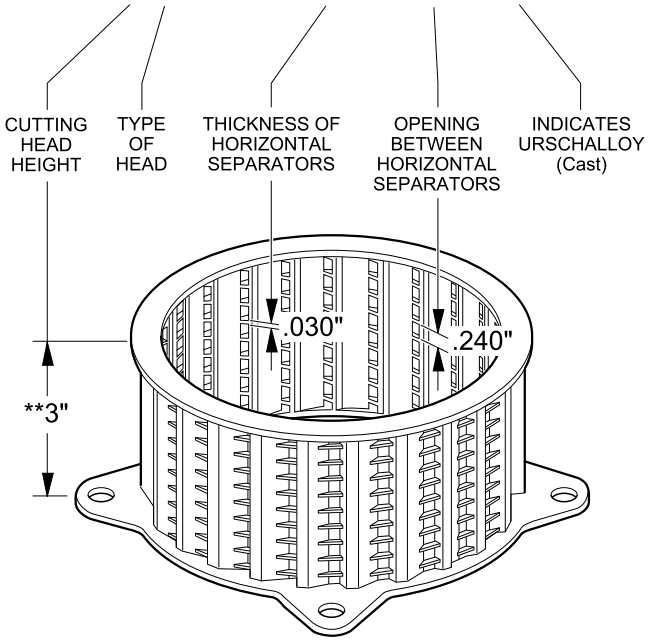

SPECIAL COLUMN CUTTING HEAD DESCRIPTION

3 — 000 2900 — 6 U

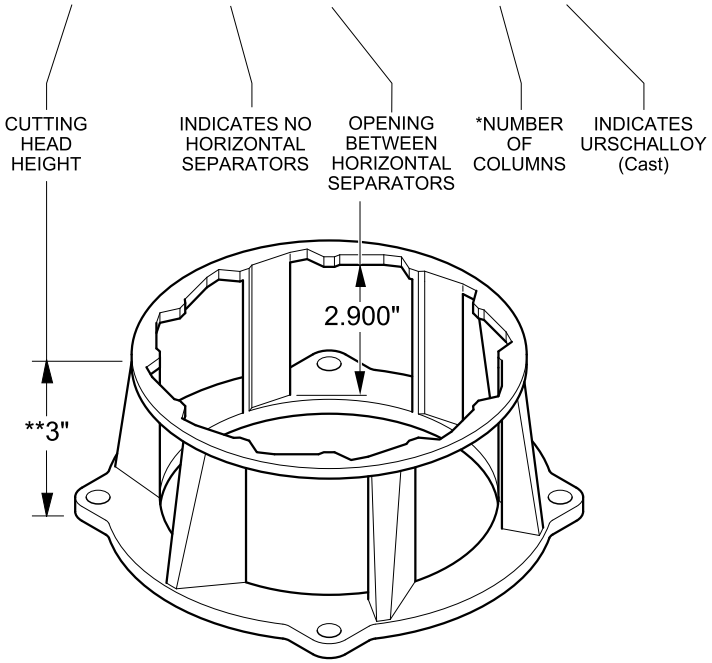

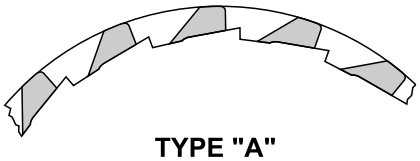

TYPE "A"
18 Column

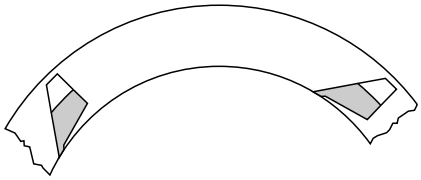

HEAVY DUTY
6 & 4 Column

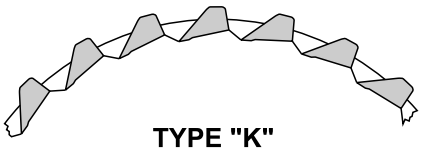

TYPE "K"
24 Column

* Description number with "P" after cutting head height indicates 12 columns (no column designation).

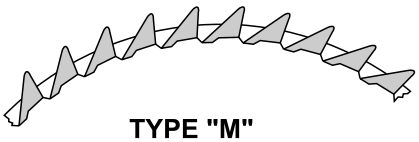

TYPE "M"
48 Column

** Actual dimension of cutting head is 3.390"

NOTE: *See page 23 for description of cutting head types. Use 5 digit part number when ordering. Consult Urschel Laboratories for specific cutting head applications.*

3" CUTTING HEADS URSCHALLOY	
3A-050080U	66855
3A-050100U	66856
3A-100100U	67061
3A-120120U	66753
3A-120360U	66824
3A-120840U	67065
3K-025040U	66844
3K-030060U	66774
3K-030090U	66770
3K-030120U	66754
3K-030165U	66765
3K-030180U	66750
3K-030210U	66784
3K-030240U	66755
3K-030270U	66948
3K-030300U	66756
3K-030340U	66938
3K-030400U	66828
3K-030500U	66795
3K-050750U	66819
3K-0501500U	66820
3M-025040U	66866
3M-030060U	66792
3M-030070U	66995
3M-030080U	66996
3M-030090U	66896
3M-030120U	66897
3M-030150U	66898
3M-030250U	66793
SPECIAL COLUMN	
3P-0901400U	66831
3-0002900-4U	66833
3-0002900-6U	66832

NOTE: *Cutting heads in the chart are listed by type and from the smallest opening between the horizontal separators to the largest opening.*

Feed Assembly, 3" Cutting Head (62659)

See the addendum for updated information

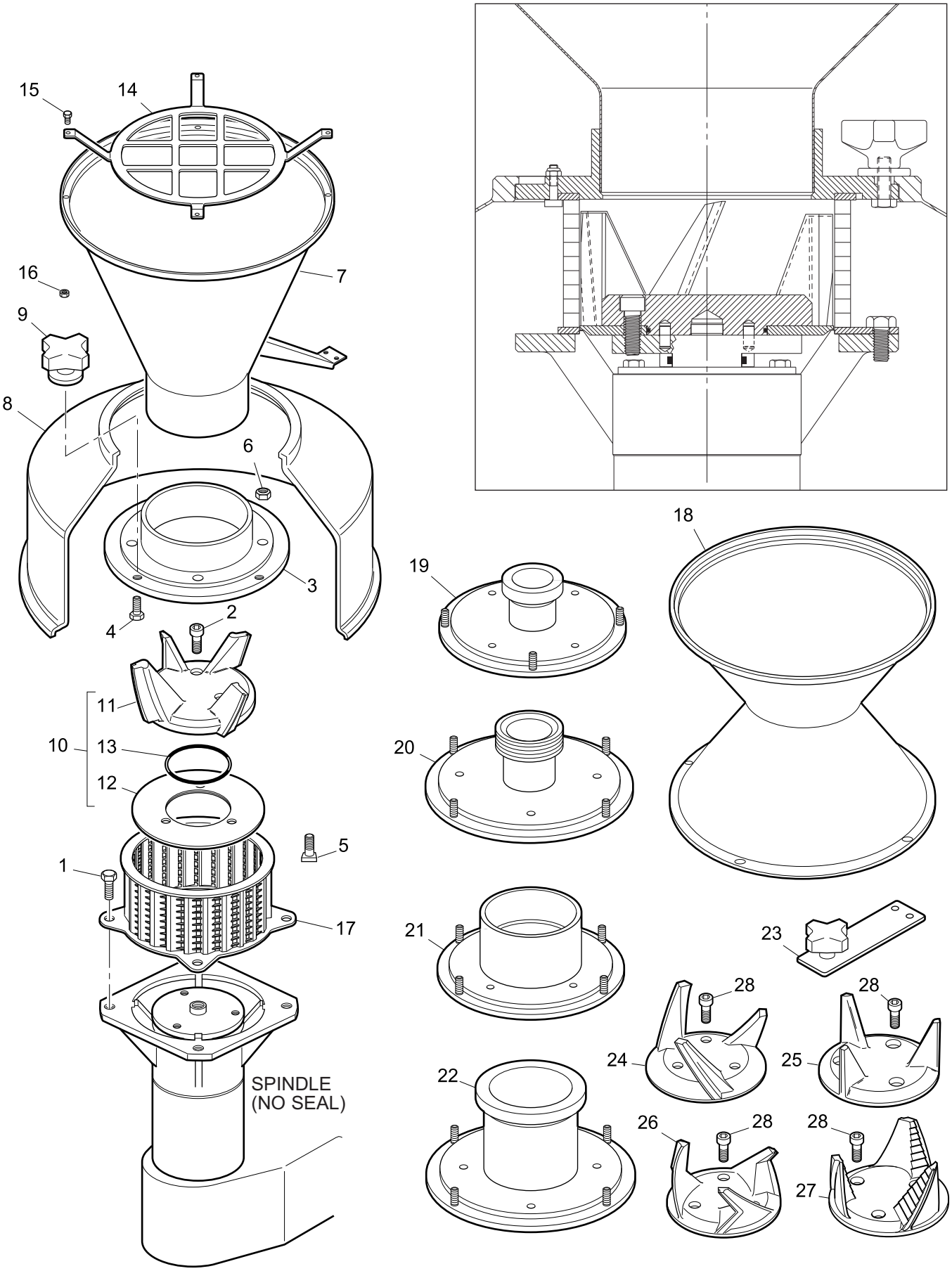

Feed Assembly, 3" Cutting Head (62659)

ITEM NO.	PART NO.	DESCRIPTION	QTY.
—	62659	**Feed Assembly,** *1700, 3" cutting head, (includes items 1–16)*	1
1	10057	**Hex Head Cap Screw,** *3/8-16 x 3/4", s.s.*	4
2	62425	**Socket Head Cap Screw,** *3/8-16 x 1"*	3
3	62630	**Feed Adapter,** *5.00" I.D. x 1.937"*, *(includes item 4)*	1
4	10047	**Hex Head Cap Screw,** *5/16-18 x 1", s.s.*	4
5	62166	**Clamp Screw**	4
6	10230	**Hex Nut,** *1/4-20, s.s., locking, thick*	4
7	63690	**Funnel Hopper**	1
8	62655	**Upper Enclosure,** *3" cutting head*	1
9	62287	**Hand Knob with Washer,** *5/16-18*	4
10	66862	**Impeller Assembly,** *(includes items 11-13)*	1
11	66860	**Impeller,** *4 paddle, Di-o-cut, 3"*	1
12	66861	**Impeller Plate**	1
13	71059	**"O" Ring,** *3/32 x 2-5/8 x 2-13/16"*	1
14	63450	**Hopper Grid**	1
15	10316	**Hex Head Cap Screw,** *10-24 x 1/2", s.s.*	4
16	10231	**Hex Nut,** *10-24, s.s., locking*	4
17	*	**Cutting Head,** *3"*	1
		ALTERNATE PARTS	
18	63691	**Conical Feed Hopper,** *(replaces hopper grid, item 14)*	1
19	67143	**Feed Adapter,** *2" Tri-Clamp*	1
20	62626	**Feed Adapter,** *3" threaded* **	1
21	62614	**Feed Adapter,** *4.05 I.D. x 4.094", (requires 63689 funnel hopper)*	1
22	62852	**Feed Adapter,** *4" Tri-Clamp*	1
23	63752	**Actuator Bracket,** *(use with alternate feed adapters that do not require the use of a funnel hopper; replaces one hand knob, item 9)*	1
24	66590	**Impeller,** *3 paddle, forward slant, 3", (replaces items 10–13)*	1
25	66214	**Impeller,** *3 paddle, straight, 3", (replaces items 10–13)*	1
26	66656	**Impeller,** *3 paddle, dog leg, 3", (replaces items 10–13)*	1
27	66589	**Impeller,** *3 paddle, back slant, 3", (replaces items 10–13)*	1
28	16050	**Socket Head Cap Screw,** *3/8-16 x 3/4", 17-4PH, (use with alternate impellers, items 24-27, replaces item 2)*	3

* See pages 128 & 131.

** Sanitary Acme thread, bevel seat fitting.

Feed Assembly, .650 Microcut (62781)

See the addendum for updated information

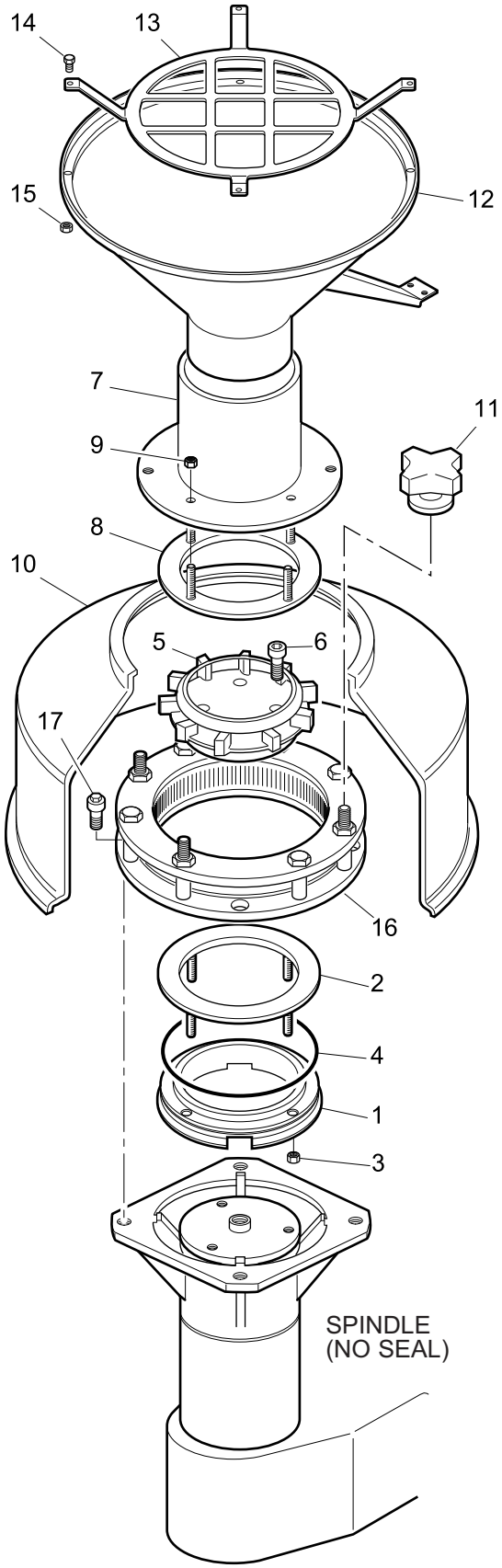

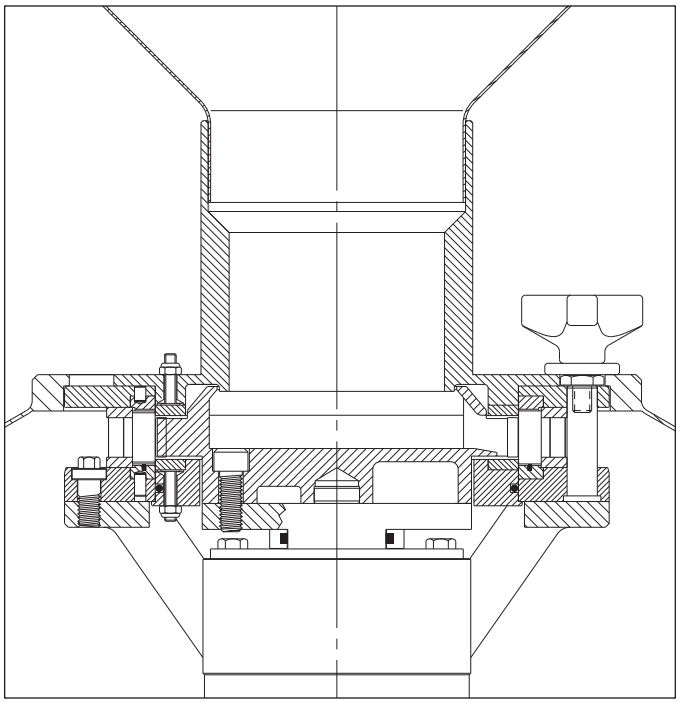

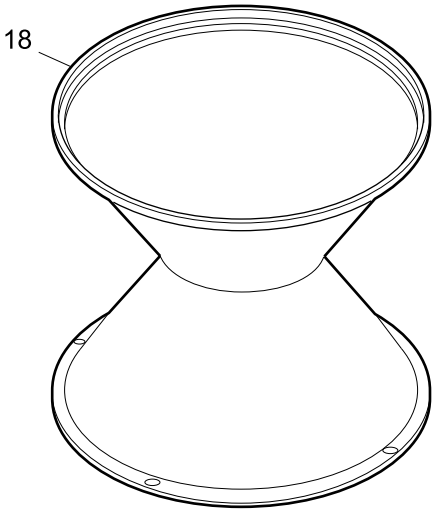

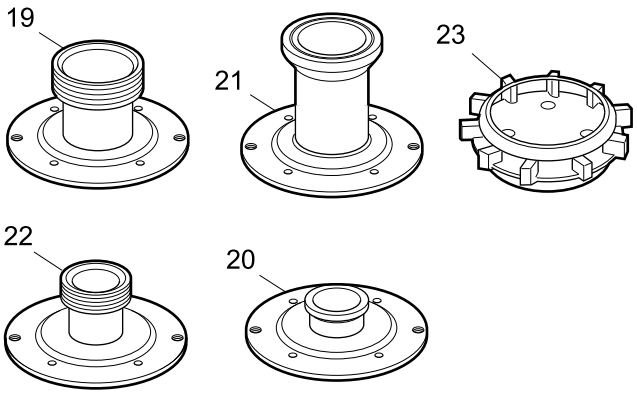

Feed Assembly, .650 Microcut (62781)

ITEM NO.	PART NO.	DESCRIPTION	QTY.
—	62781	**Feed Assembly,** *1700, veri-cut, (includes items 1–15)*	1
1	62698	**Lower Retaining Ring**	1
2	62175	**Wear Ring**	1
3	10258	**Hex Nut,** *10-32, s.s., locking*	4
4	62180	**"O" Ring,** *1/8 x 5-5/8 x 5-7/8"*	1
5	67004	**Impeller,** *9 paddle, .650 veri-cut*	1
6	10112	**Socket Head Cap Screw,** *3/8-16 x 1", s.s.*	3
7	62697	**Feed Adapter,** *veri-cut impeller*	1
8	62175	**Wear Ring**	1
9	10258	**Hex Nut,** *10-32, s.s., locking*	4
10	62652	**Upper Enclosure,** *microcut head*	1
11	62287	**Hand Knob with Washer,** *5/16-18*	4
12	63689	**Funnel Hopper**	1
13	63450	**Hopper Grid**	1
14	10316	**Hex Head Cap Screw,** *10-24 x 1/2", s.s.*	4
15	10231	**Hex Nut,** *10-24, s.s., locking*	4
16	*	**Microcut Head,** *(includes item 17)*	1
17	*	**Hex Head Cap Screw,** *special*	4
		ALTERNATE PARTS	
18	63691	**Conical Feed Hopper,** *(replaces hopper grid, item 13)*	1
19	62741	**Feed Adapter,** *3" threaded, veri-cut impeller***	1
20	63081	**Feed Adapter,** *2" Tri-Clamp, veri-cut impeller*	1
21	63506	**Feed Adapter,** *3" Tri-Clamp, veri-cut impeller*	1
22	63932	**Feed Adapter,** *2" threaded, veri-cut impeller***	1
23	67156	**Impeller,** *9 paddle, .650 veri-cut, heavy duty*	1

* See pages 132 & 134.
** Sanitary Acme thread, bevel seat fitting.

Manual Page Number	Revision

16–17

Safety, Safety Switch System Test: The electrical enclosure as currently supplied uses a safety monitor instead of an amplifier. The safety system test procedure is the same; refer to the entry on the previous page for information on the safety monitor. Perform the safety switch test **daily**.

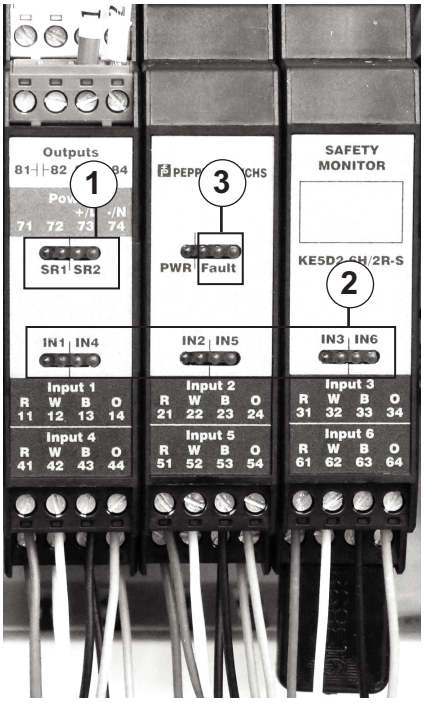

Locations of Sensor Leads on the Safety Monitor					
Switch Number	**1**	**2**	**3**	**4** (Grease Spindle Only)	**6** (Oil Mist Spindle Only)
Guard	Belt Guard	Upper Cutting Enclosure	Feed Hopper	Rear Guard	Oil Pressure and Level Switches
Switch Input	IN1	IN2	IN3	IN4	IN6

(1) Relay Status LEDs (SR1 - SR2)
(2) Switch Input LEDs (IN1 - IN6)
(3) Fault LEDs

31

Installation – Electrical Power:
add to Step 1: A machine with a hazard alert label with a ***"Y" (1)*** in the voltage designation contains mini circuit breakers (MCBs) and requires a Wye power supply. To check for a Wye power supply, first calculate the voltage to ground by multiplying the supply voltage by .577. Next, measure the voltage at each phase to ground and compare to the calculated value.

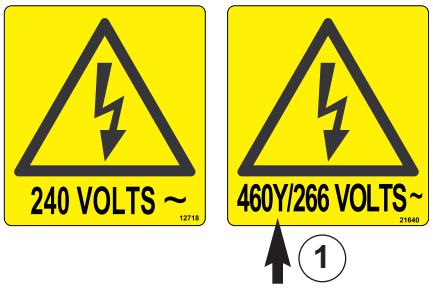

For example, at 400 volts, a Wye supply will measure approximately 230 volts from one phase to ground (400 x .577). One phase may read 0 volts, which is acceptable. A Delta supply at 400 volts will measure 400 volts from one phase to ground. If the machine is supplied with mini circuit breakers or the label designates a Wye power supply, and the voltage from one phase to ground exceeds 277 volts, contact an Urschel service representative.

33

Installation – Air Supply, **Proper spindle lubrication**: the second and third sentence in the first paragraph should read:
"The air supply should be 150 p.s.i. (10.34 bar) maximum and capable of supplying at least 68 c.f.h. (1.84 m^3/h). Connect the air supply to the air inlet (Figure 25, page 32)".

Manual Page Number	Revision
80–81	Maintenance, Electrical Assembly: The electrical assembly supplied on current machines has changed. The current system control conforms to ISO 13849, Performance Level d. Components are shown in the parts section of this addendum. Inspection information for the current assembly is below. **Inspection, Current Electrical Assemblies** **Safety monitor:** the function and operation of the monitor are described in the entry for page 15. When checking the terminal screws for tightness, torque to 5 inch-pounds or 0.56 newton meters. **Mini Circuit Breakers (MCB) and Fuses:** the electrical enclosure is supplied with fuses or mini circuit breakers. Mini circuit breakers (MCBs) are used with power supplies at 240 volts and lower. At 380 to 480 volts, a Wye power supply is necessary to use MCBs (Wye is the most common power supply worldwide). Delta supplies at 380-460 volts use fuses. Fuses are also used for both Delta and Wye 575 volt supplies. MCBs, when tripped, must be switched off and then on again to reset. If fuses fail or MCBs trip frequently, investigate the cause.
90	Parts, Video Tapes: the following video tapes 63588, 63595, 63596, 63634, 63637 and 63638 have been replaced by **401007** Model Comitrol Microcut Head Maintenance.
92–93	Parts, Tools: Items 1, 3 and 4 wrenches have been replaced by the following: **98207** Wrench, combination, 5/16", long **98133** Wrench, combination, 3/8", chrome plated **11010** Wrench, combination, 9/16", chrome plated **98129** Wrench, combination, 5/8", chrome plated **98132** Wrench, combination, 3/4", chrome plated **98130** Wrench, combination, 1/2", chrome plated **98131** Wrench, combination, 7/16", chrome plated **98163** Screwdriver, flat head, 1/4" flat x 6" 63409 Oil, DTE Light has been replaced by: **67282** Oil, Urschelube, FDA, ISO 22, 1 Gallon. This high performance synthetic oil is ISO Grade 22, NSF certified H-1 and meets FDA Title 21 Section 178.3620(b). The following is an optional tool: **64155** Seal Tool, adapter plate. This tool is used to remove and install the oil seal (part number 64086) in the adapter plate (part number 62154).

(continued on the following page)