STANDARD CUTTING HEAD DESCRIPTION

3K — 030 240 U

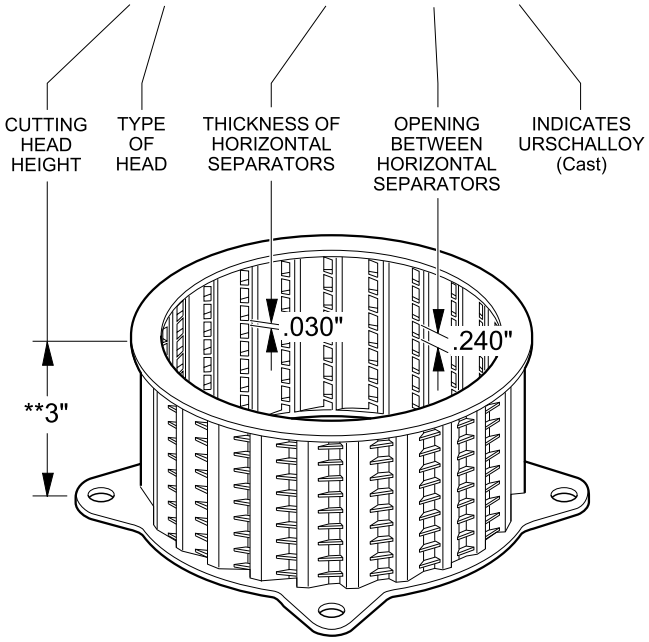

SPECIAL COLUMN CUTTING HEAD DESCRIPTION

3 — 000 2900 — 6 U

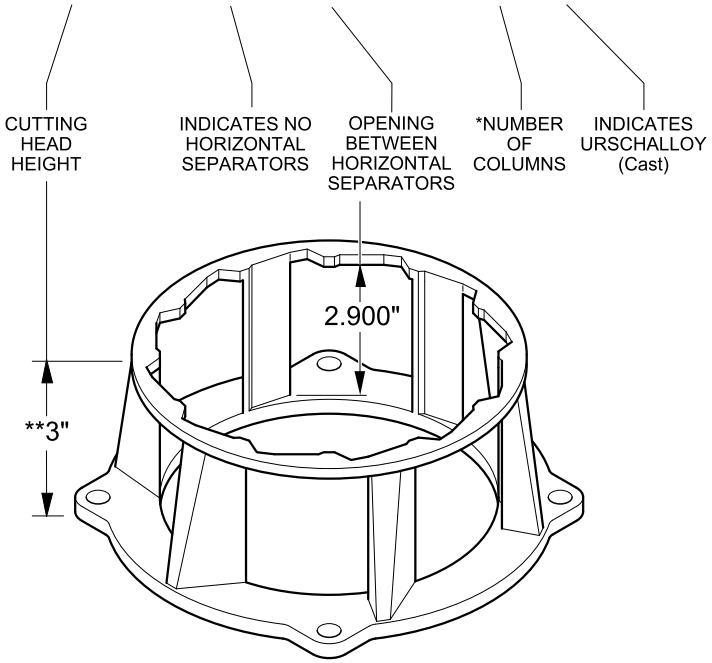

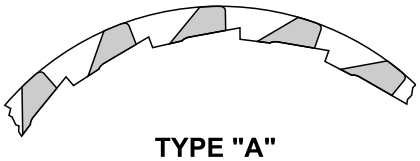

TYPE "A"
18 Column

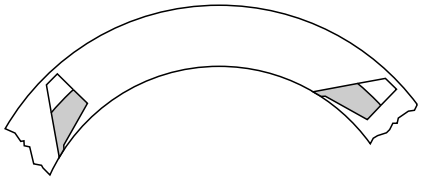

HEAVY DUTY
6 & 4 Column

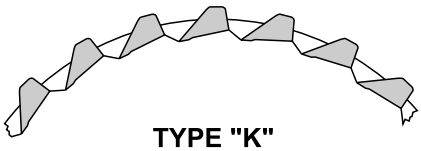

TYPE "K"
24 Column

* Description number with "P" after cutting head height indicates 12 columns (no column designation).

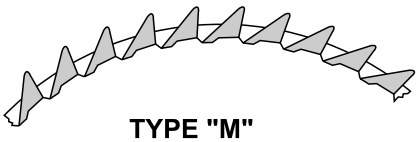

TYPE "M"
48 Column

** Actual dimension of cutting head is 3.390"

NOTE: *See page 23 for description of cutting head types. Use 5 digit part number when ordering. Consult Urschel Laboratories for specific cutting head applications.*

3" CUTTING HEADS URSCHALLOY	
3A-050080U	66855
3A-050100U	66856
3A-100100U	67061
3A-120120U	66753
3A-120360U	66824
3A-120840U	67065
3K-025040U	66844
3K-030060U	66774
3K-030090U	66770
3K-030120U	66754
3K-030165U	66765
3K-030180U	66750
3K-030210U	66784
3K-030240U	66755
3K-030270U	66948
3K-030300U	66756
3K-030340U	66938
3K-030400U	66828
3K-030500U	66795
3K-050750U	66819
3K-0501500U	66820
3M-025040U	66866
3M-030060U	66792
3M-030070U	66995
3M-030080U	66996
3M-030090U	66896
3M-030120U	66897
3M-030150U	66898
3M-030250U	66793
SPECIAL COLUMN	
3P-0901400U	66831
3-0002900-4U	66833
3-0002900-6U	66832

NOTE: *Cutting heads in the chart are listed by type and from the smallest opening between the horizontal separators to the largest opening.*

Feed Assembly, 3" Cutting Head (62659)

See the addendum for updated information

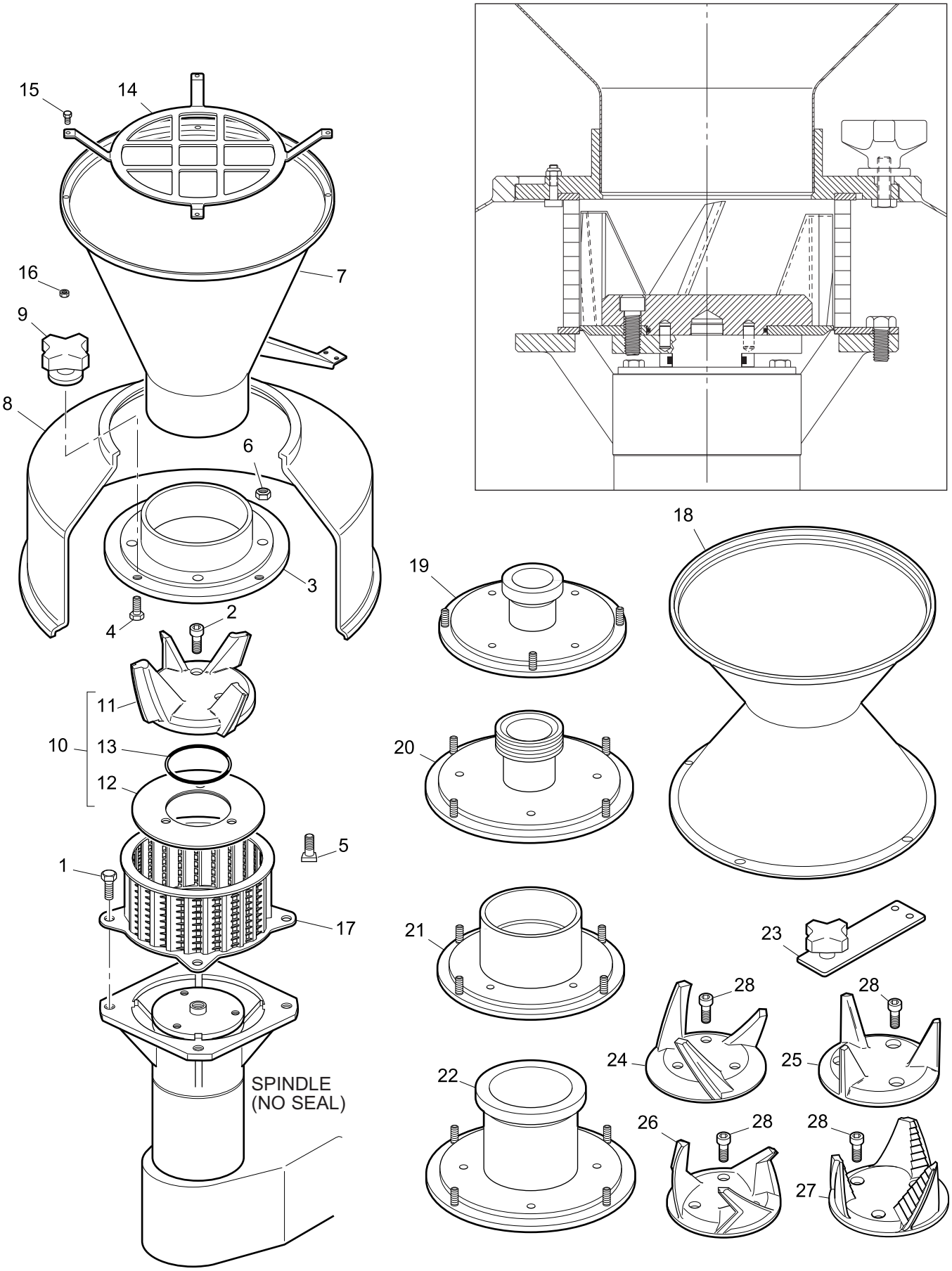

Feed Assembly, 3" Cutting Head (62659)

ITEM NO.	PART NO.	DESCRIPTION	QTY.
—	62659	**Feed Assembly,** *1700, 3" cutting head, (includes items 1–16)*	1
1	10057	**Hex Head Cap Screw,** *3/8-16 x 3/4", s.s.*	4
2	62425	**Socket Head Cap Screw,** *3/8-16 x 1"*	3
3	62630	**Feed Adapter,** *5.00" I.D. x 1.937"*, *(includes item 4)*	1
4	10047	**Hex Head Cap Screw,** *5/16-18 x 1", s.s.*	4
5	62166	**Clamp Screw**	4
6	10230	**Hex Nut,** *1/4-20, s.s., locking, thick*	4
7	63690	**Funnel Hopper**	1
8	62655	**Upper Enclosure,** *3" cutting head*	1
9	62287	**Hand Knob with Washer,** *5/16-18*	4
10	66862	**Impeller Assembly,** *(includes items 11-13)*	1
11	66860	**Impeller,** *4 paddle, Di-o-cut, 3"*	1
12	66861	**Impeller Plate**	1
13	71059	**"O" Ring,** *3/32 x 2-5/8 x 2-13/16"*	1
14	63450	**Hopper Grid**	1
15	10316	**Hex Head Cap Screw,** *10-24 x 1/2", s.s.*	4
16	10231	**Hex Nut,** *10-24, s.s., locking*	4
17	*	**Cutting Head,** *3"*	1
		ALTERNATE PARTS	
18	63691	**Conical Feed Hopper,** *(replaces hopper grid, item 14)*	1
19	67143	**Feed Adapter,** *2" Tri-Clamp*	1
20	62626	**Feed Adapter,** *3" threaded* **	1
21	62614	**Feed Adapter,** *4.05 I.D. x 4.094", (requires 63689 funnel hopper)*	1
22	62852	**Feed Adapter,** *4" Tri-Clamp*	1
23	63752	**Actuator Bracket,** *(use with alternate feed adapters that do not require the use of a funnel hopper; replaces one hand knob, item 9)*	1
24	66590	**Impeller,** *3 paddle, forward slant, 3", (replaces items 10–13)*	1
25	66214	**Impeller,** *3 paddle, straight, 3", (replaces items 10–13)*	1
26	66656	**Impeller,** *3 paddle, dog leg, 3", (replaces items 10–13)*	1
27	66589	**Impeller,** *3 paddle, back slant, 3", (replaces items 10–13)*	1
28	16050	**Socket Head Cap Screw,** *3/8-16 x 3/4", 17-4PH, (use with alternate impellers, items 24-27, replaces item 2)*	3

* See pages 128 & 131.

** Sanitary Acme thread, bevel seat fitting.

Feed Assembly, .650 Microcut (62781)

See the addendum for updated information

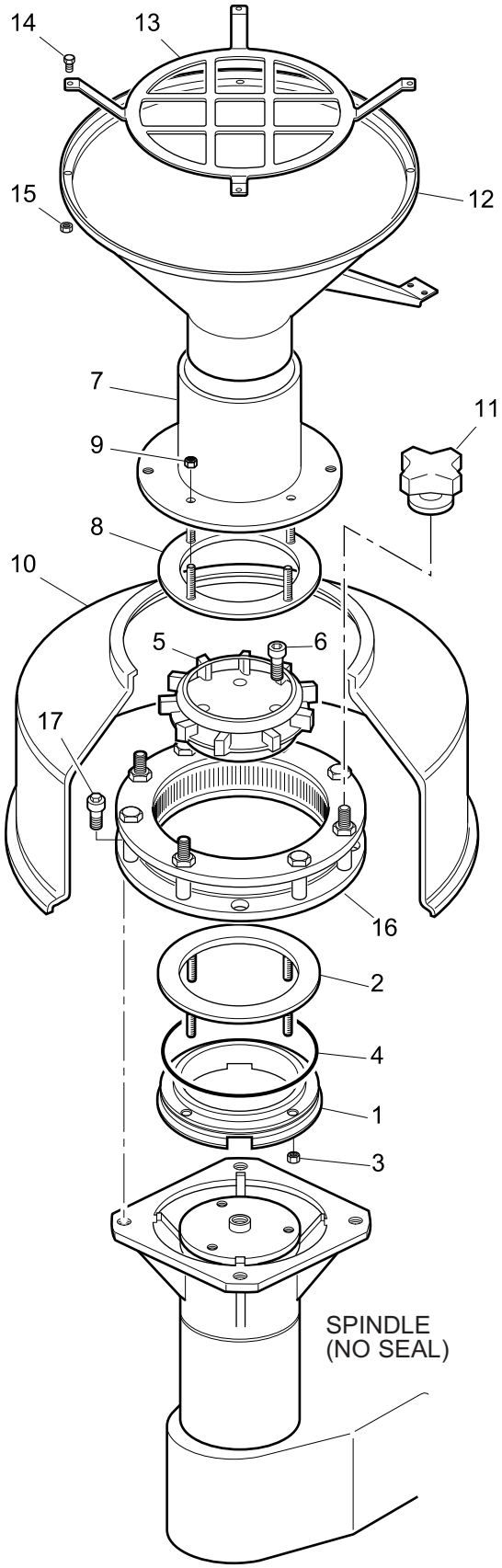

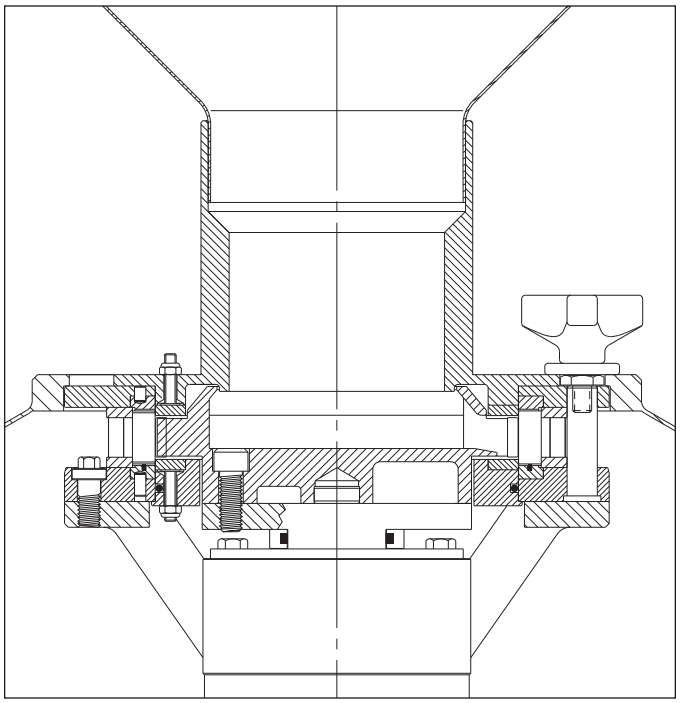

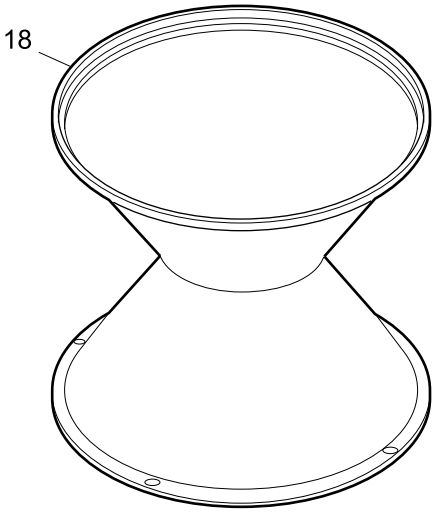

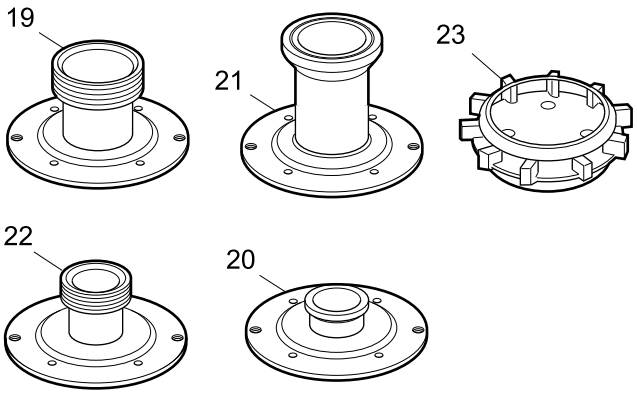

Feed Assembly, .650 Microcut (62781)

ITEM NO.	PART NO.	DESCRIPTION	QTY.
—	62781	**Feed Assembly,** *1700, veri-cut, (includes items 1–15)*	1
1	62698	**Lower Retaining Ring**	1
2	62175	**Wear Ring**	1
3	10258	**Hex Nut,** *10-32, s.s., locking*	4
4	62180	**"O" Ring,** *1/8 x 5-5/8 x 5-7/8"*	1
5	67004	**Impeller,** *9 paddle, .650 veri-cut*	1
6	10112	**Socket Head Cap Screw,** *3/8-16 x 1", s.s.*	3
7	62697	**Feed Adapter,** *veri-cut impeller*	1
8	62175	**Wear Ring**	1
9	10258	**Hex Nut,** *10-32, s.s., locking*	4
10	62652	**Upper Enclosure,** *microcut head*	1
11	62287	**Hand Knob with Washer,** *5/16-18*	4
12	63689	**Funnel Hopper**	1
13	63450	**Hopper Grid**	1
14	10316	**Hex Head Cap Screw,** *10-24 x 1/2", s.s.*	4
15	10231	**Hex Nut,** *10-24, s.s., locking*	4
16	*	**Microcut Head,** *(includes item 17)*	1
17	*	**Hex Head Cap Screw,** *special*	4
		ALTERNATE PARTS	
18	63691	**Conical Feed Hopper,** *(replaces hopper grid, item 13)*	1
19	62741	**Feed Adapter,** *3" threaded, veri-cut impeller***	1
20	63081	**Feed Adapter,** *2" Tri-Clamp, veri-cut impeller*	1
21	63506	**Feed Adapter,** *3" Tri-Clamp, veri-cut impeller*	1
22	63932	**Feed Adapter,** *2" threaded, veri-cut impeller***	1
23	67156	**Impeller,** *9 paddle, .650 veri-cut, heavy duty*	1

* See pages 132 & 134.
** Sanitary Acme thread, bevel seat fitting.

Manual Page Number	Revision

16–17

Safety, Safety Switch System Test: The electrical enclosure as currently supplied uses a safety monitor instead of an amplifier. The safety system test procedure is the same; refer to the entry on the previous page for information on the safety monitor. Perform the safety switch test **daily**.

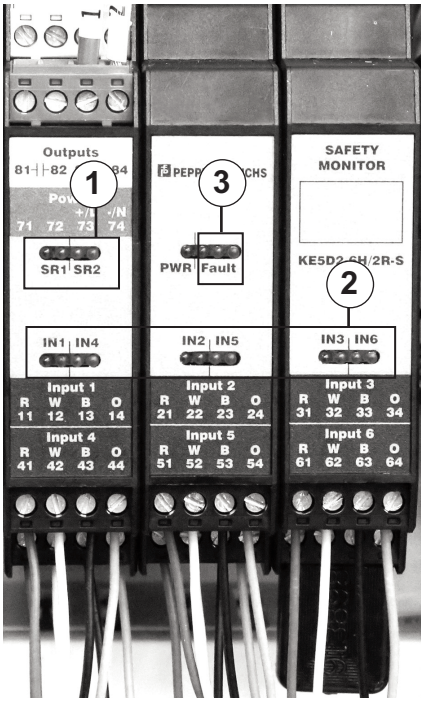

Locations of Sensor Leads on the Safety Monitor					
Switch Number	**1**	**2**	**3**	**4** (Grease Spindle Only)	**6** (Oil Mist Spindle Only)
Guard	Belt Guard	Upper Cutting Enclosure	Feed Hopper	Rear Guard	Oil Pressure and Level Switches
Switch Input	IN1	IN2	IN3	IN4	IN6

(1) Relay Status LEDs (SR1 - SR2)
(2) Switch Input LEDs (IN1 - IN6)
(3) Fault LEDs

31

Installation – Electrical Power:
add to Step 1: A machine with a hazard alert label with a ***"Y" (1)*** in the voltage designation contains mini circuit breakers (MCBs) and requires a Wye power supply. To check for a Wye power supply, first calculate the voltage to ground by multiplying the supply voltage by .577. Next, measure the voltage at each phase to ground and compare to the calculated value.

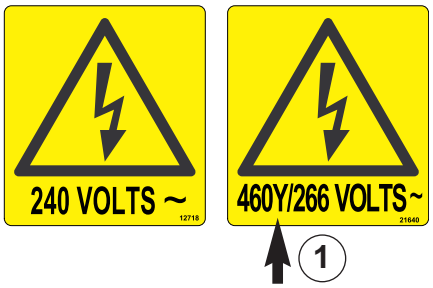

For example, at 400 volts, a Wye supply will measure approximately 230 volts from one phase to ground (400 x .577). One phase may read 0 volts, which is acceptable. A Delta supply at 400 volts will measure 400 volts from one phase to ground. If the machine is supplied with mini circuit breakers or the label designates a Wye power supply, and the voltage from one phase to ground exceeds 277 volts, contact an Urschel service representative.

33

Installation – Air Supply, **Proper spindle lubrication**: the second and third sentence in the first paragraph should read:
"The air supply should be 150 p.s.i. (10.34 bar) maximum and capable of supplying at least 68 c.f.h. (1.84 m^3/h). Connect the air supply to the air inlet (Figure 25, page 32)".

Manual Page Number	Revision
80–81	Maintenance, Electrical Assembly: The electrical assembly supplied on current machines has changed. The current system control conforms to ISO 13849, Performance Level d. Components are shown in the parts section of this addendum. Inspection information for the current assembly is below. **Inspection, Current Electrical Assemblies** **Safety monitor:** the function and operation of the monitor are described in the entry for page 15. When checking the terminal screws for tightness, torque to 5 inch-pounds or 0.56 newton meters. **Mini Circuit Breakers (MCB) and Fuses:** the electrical enclosure is supplied with fuses or mini circuit breakers. Mini circuit breakers (MCBs) are used with power supplies at 240 volts and lower. At 380 to 480 volts, a Wye power supply is necessary to use MCBs (Wye is the most common power supply worldwide). Delta supplies at 380-460 volts use fuses. Fuses are also used for both Delta and Wye 575 volt supplies. MCBs, when tripped, must be switched off and then on again to reset. If fuses fail or MCBs trip frequently, investigate the cause.
90	Parts, Video Tapes: the following video tapes 63588, 63595, 63596, 63634, 63637 and 63638 have been replaced by **401007** Model Comitrol Microcut Head Maintenance.
92–93	Parts, Tools: Items 1, 3 and 4 wrenches have been replaced by the following: **98207** Wrench, combination, 5/16", long **98133** Wrench, combination, 3/8", chrome plated **11010** Wrench, combination, 9/16", chrome plated **98129** Wrench, combination, 5/8", chrome plated **98132** Wrench, combination, 3/4", chrome plated **98130** Wrench, combination, 1/2", chrome plated **98131** Wrench, combination, 7/16", chrome plated **98163** Screwdriver, flat head, 1/4" flat x 6" 63409 Oil, DTE Light has been replaced by: **67282** Oil, Urschelube, FDA, ISO 22, 1 Gallon. This high performance synthetic oil is ISO Grade 22, NSF certified H-1 and meets FDA Title 21 Section 178.3620(b). The following is an optional tool: **64155** Seal Tool, adapter plate. This tool is used to remove and install the oil seal (part number 64086) in the adapter plate (part number 62154).

(continued on the following page)

3" CUTTING HEADS		3" CUTTING HEADS		3" CUTTING HEADS SPECIAL COLUMN	
3A-060090	66857	3K-010010	66852	3-060180-10	67009
3A-090090	66651	3K-015015	66412	3-060240-10	67008
3A-120150	66601	3K-010020	66752	3-060300-10	66837
3A-120210	67151	3K-020020	66738	3-060390-14	66708
3A-090270	66891	3K-015025	66413	3-060510-10	66994
3A-060510	66663	3K-015030	66530	3-060510-14	66816
		3K-030030	66627	3-060750-10	66677
3B-015015	66787	3K-020035	66878	3-060750-14	66658
3B-010020	66772	3K-020040	66517	3-0601000-7	67114
3B-020020	66786	3K-040040	66714	3-0601000-10	66825
3B-010025	66745	3K-020045	66899	3-0601500-7	66608
3B-015025	66271	3K-020050	66518	3-0601500-10	66717
3B-010030	66197	3K-030050	66636	3-0601500-14	66609
3B-020030	66272	3K-020060	66482		
3B-030030	66788	3K-030060	66531		
3B-015035	66782	3K-060060	66700		
3B-020035	66791	3K-020070	66519		
3B-010040	66198	3K-030080	66789		
3B-010050	66853	3K-030090	66604		
3B-010060	66945	3K-090090	66775		
3B-020060	66829	3K-020100	66483		
3B-020070	66830	3K-030110	66849		
3B-020080	66329	3K-020120	66785		
3B-020100	66285	3K-030120	66484		
3B-020140	66843	3K-120120	66773		
3B-010150	66854	3K-030150	66640		
		3K-030165	66671		
3J-030030	67086	3K-015180	66718		
3J-030060	67012	3K-030180	66485		
3J-030120	67011	3K-030195	66799		
3J-030180	66521	3K-030210	66562		
3J-030240	66522	3K-030240	66486		
3J-030300	66569	3K-060240	66411		
3J-030330	66781	3K-030270	66523		
3J-030390	66559	3K-030285	67129		
3J-030450	67010	3K-060300	66524		
3J-030510	66472	3K-030390	66605		
3J-030750	66573	3K-030510	66709		
3J-060750	66525	3K-030750	66822		
3J-0601000	66728	3K-0601500	66625		
3J-0601500	66592	3K-030120180	67107		
		3K-030150210	67108		
		3K-030100240	67110		
		3K-030120750	67109		
		3-030030, SPECIAL	66892		
		3K-030165, SPECIAL	66751		

NOTE: *Cutting heads in the chart are listed by type and from the smallest opening between the horizontal separators to the largest opening.*

PARTS

Microcut Head Assembly

See the addendum for updated information

ITEM NO.	PART NO.	DESCRIPTION	QTY.
—	*	**Microcut Head Assembly,** *(includes items 1–12)*	1
1	*	**Upper Blade Holding Ring**	1
2	*	Microcut **Blade**	*
3	*	**Lower Blade Holding Ring**	1
4	*	**Backing Ring**	1
—	66007	**Microcut Head Subassembly,** *(includes items 5–12)*	1
5	66008	**Lower Ring Assembly,** *microcut, (includes item 6)*	1
6	10222	**Dowel Pin,** *3/16" x 3/8", s.s.*	2
7	66017	**Hex Head Cap Screw,** *special*	4
8	66827	**Retaining Ring**	1
9	66015	**Upper Ring,** *microcut head, (includes item 10)*	1
10	10260	**Dowel Pin,** *3/16" x 1/4", s.s.*	2
11	66016	**Hex Head Cap Screw,** *special*	4
12	62286	**Special Hex Stud**	4
—	67025	‡ **Microcut Head Subassembly,** *316L, (includes items 13–20)*	1
13	67026	**Lower Ring Assembly,** *microcut head, 316L, (includes item 14)*	1
14	10385	**Dowel,** *3/16" x 3/8", 316 s.s.*	2
15	67042	**Hex Head Cap Screw,** *special, 316L, s.s.*	4
16	67069	**Retaining Ring,** *White EPDM*	1
17	67029	**Upper Ring,** *316L, (includes item 18)*	1
18	10386	**Dowel,** *3/16" x 1/4", 316 s.s.*	2
19	67046	**Hex Head Cap Screw,** *special, 316L, s.s.*	4
20	67047	**Special Hex Stud,** *316L*	4
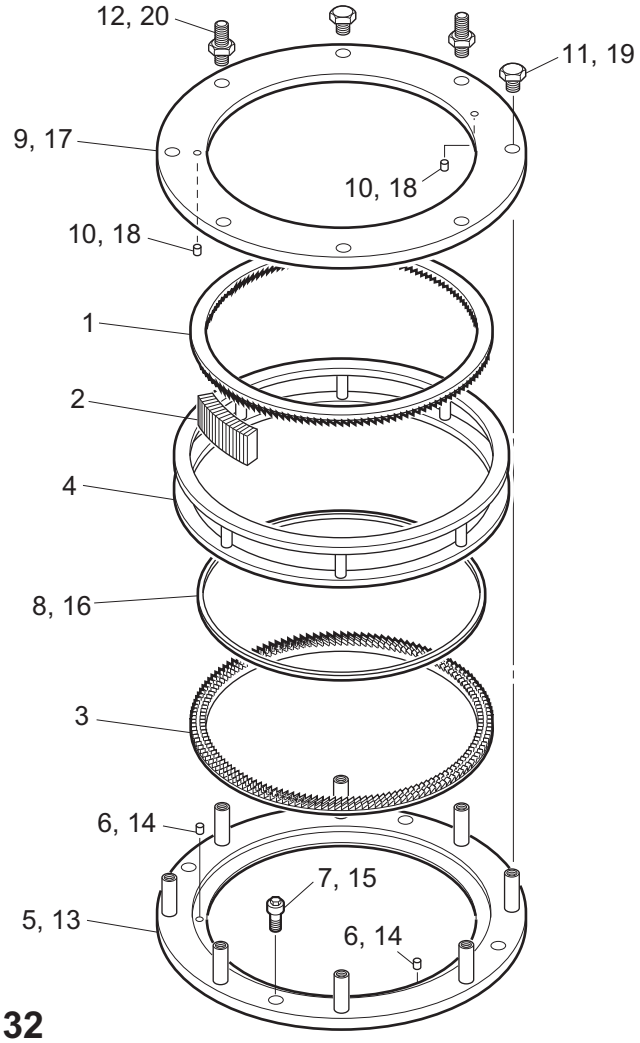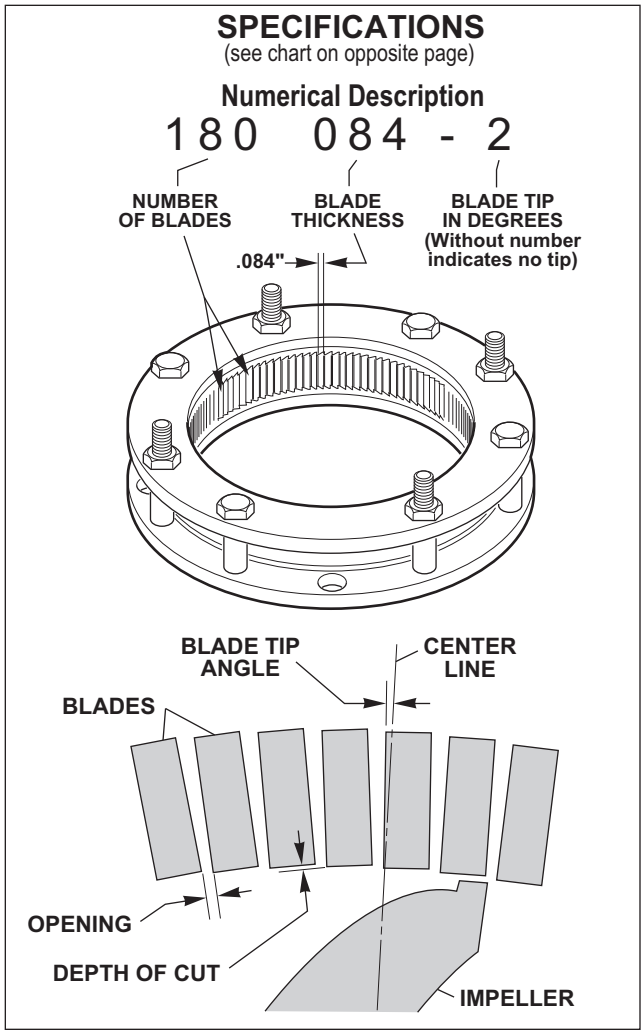
* See charts, pages 133 & 134.
‡ Optional subassembly in 316L stainless steel