Manual Page Number	Revision

10.54-10.55 Parts, Impeller Drive Assemblies: Sealed impeller drive assemblies are now available. See the entry for page 6.9 for more information.

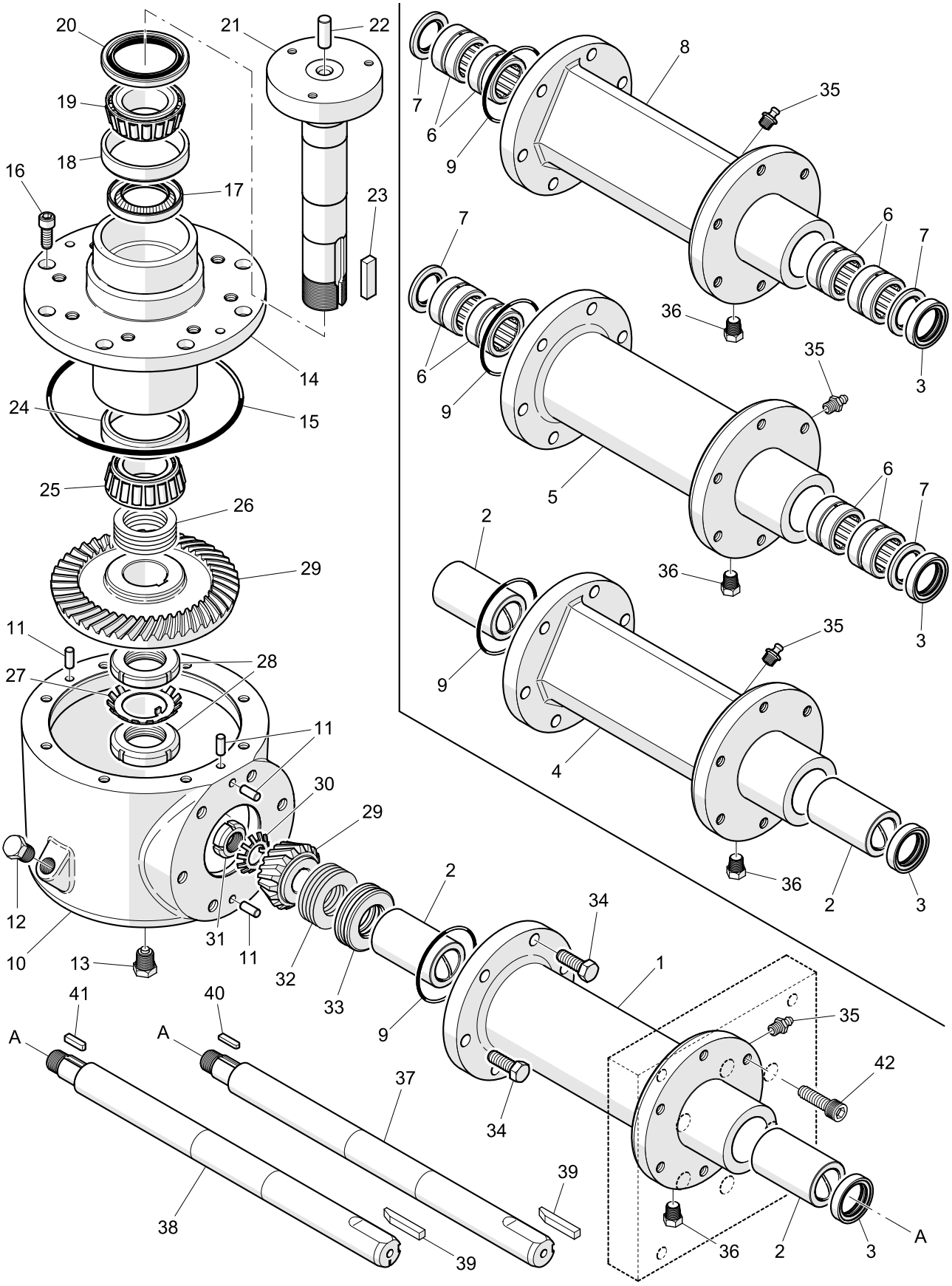

Impeller Drive Assembly	Bearing Housing			Bearings or Bushings			Seals		
Part Number and Description	Item	Qty.	Part Number and Description	Item	Qty.	Part No. and Descrip.	Item	Qty.	Part No.
25706 - Impeller Drive Assembly, s.s., round, with bushings, sealed	1	1	**25694** - Bearing Housing, s.s., round with bushings, o-ring	2	2	**22427** - Bushing, 1.00 x 1.50 x 2.50"	3	1	**22045**
25707 - Impeller Drive Assembly, s.s., angled, with bushings, sealed	4	1	**25712** - Bearing Housing, s.s., angled with bushings, o-ring	2	2	**22427** - Bushing, 1.00 x 1.50 x 2.50"	3	1	**22045**
25708 - Impeller Drive Assembly, s.s., round, roller bearings, sealed	5	1	**25695** - Bearing Housing, s.s., round with roller bearings, o-ring	6	4	**22399** - Roller Bearing	3 7	1 2	**22045** **23856**
25709 - Impeller Drive Assembly, s.s., angled, roller bearings, sealed	8	1	**25711** - Bearing Housing, s.s., angled with roller bearings, o-ring	6	4	**22399** - Roller Bearing	3 7	1 2	**22045** **23856**
25737 - Impeller Drive Assy., s.s., round, roller bearings, sealed, HD	5	1	**25695** - Bearing Housing, s.s., round with roller bearings, o-ring	6	4	**22399** - Roller Bearing	3 7	1 2	**22045** **23856**
25738 - Impeller Drive Assy., s.s., angled, roller bearings, sealed, HD	8	1	**25711** - Bearing Housing, s.s., angled with roller bearings, o-ring	6	4	**22399** - Roller Bearing	3 7	1 2	**22045** **23856**

Item	Quantity	Part Number and Description

All impeller drive assemblies include the following parts:

9	1	**25692** - O-ring, -036 series, Viton
10	1	**25713** - Gear Case, stainless steel, o-rings (includes item 11)
11	4	**37040** - Dowel Pin, 1/4" x 5/8", 416 s.s.
12	1	**22084** - Pipe Plug, 1/4", s.s.
13	1	**25714** - Pipe Plug, 1/4", s.s., magnetic
14	1	**25691** - Impeller Bearing Housing, o-ring, s.s.
15	1	**25693** - O-ring, -255 series, Viton
16	8	**10100** - Socket Head Cap Screw, 5/16-18 x 3/4", s.s.
17	1	**22036** - Oil Seal
–	1	**22037** - Roller Bearing (includes items 18–19)
18	1	**22183** - Roller Bearing Cup, 2-5/8" O.D.
19	1	**22184** - Roller Bearing Cone, 1-3/8" I.D.
20	1	**22044** - Seal
21	1	**22054** - Shaft, impeller (includes item 22)
22	1	**22081** - Dowel Pin, 3/8" x 31/32"
23	1	**22035** - Key
–	1	**22038** - Roller Bearing (includes items 24–25)
24	1	**22183** - Roller Bearing Cup, 2-5/8" O.D.
25	1	**22185** - Roller Bearing Cone, 1-5/16" I.D.
26	1	**22032** - Shims, set of 5, 1.322" I.D.
27	1	**22048** - Lock Washer
28	2	**22047** - Lock Nut
29	1	**22046** - Gears, 8P, 15 and 45 tooth, spiral bevel (matched set)
30	1	**22050** - Lock Washer
31	1	**22049** - Lock Nut
32	1	**22031** - Shims, set of 5, 1.01" I.D.
33	1	**22043** - Thrust Bearing
34	6	**10058** - Hex Head Cap Screw, 3/8-16 x 1", s.s.
35	1	**11401** - Grease Fitting, 1/8", straight, s.s.
36	1	**22564** - Pipe Plug, 1/8", s.s.
37	1	**23498** - Shaft, drive (includes item 39)
38	1	**25686** - Shaft, drive, heavy duty (heavy duty assemblies only; includes item 39)
39	1	**23499** - Key, 1/4" x 1/4" x 1-5/8"
40	1	**25685** - Key, 1/8" x 3/16" x 3/4", hardened
41	1	**17258** - Key, 3/16" x 3/16" x 3/4" (heavy duty assemblies only)
42	6	**10113** - Socket Head Cap Screw, 3/8-16 x 1-1/4", s.s.

Manual Page Number	Revision

10.54-10.55 Parts, Impeller Drive Assemblies: Sealed impeller drive assemblies are now available. See the entry for page 6.9 for more information.

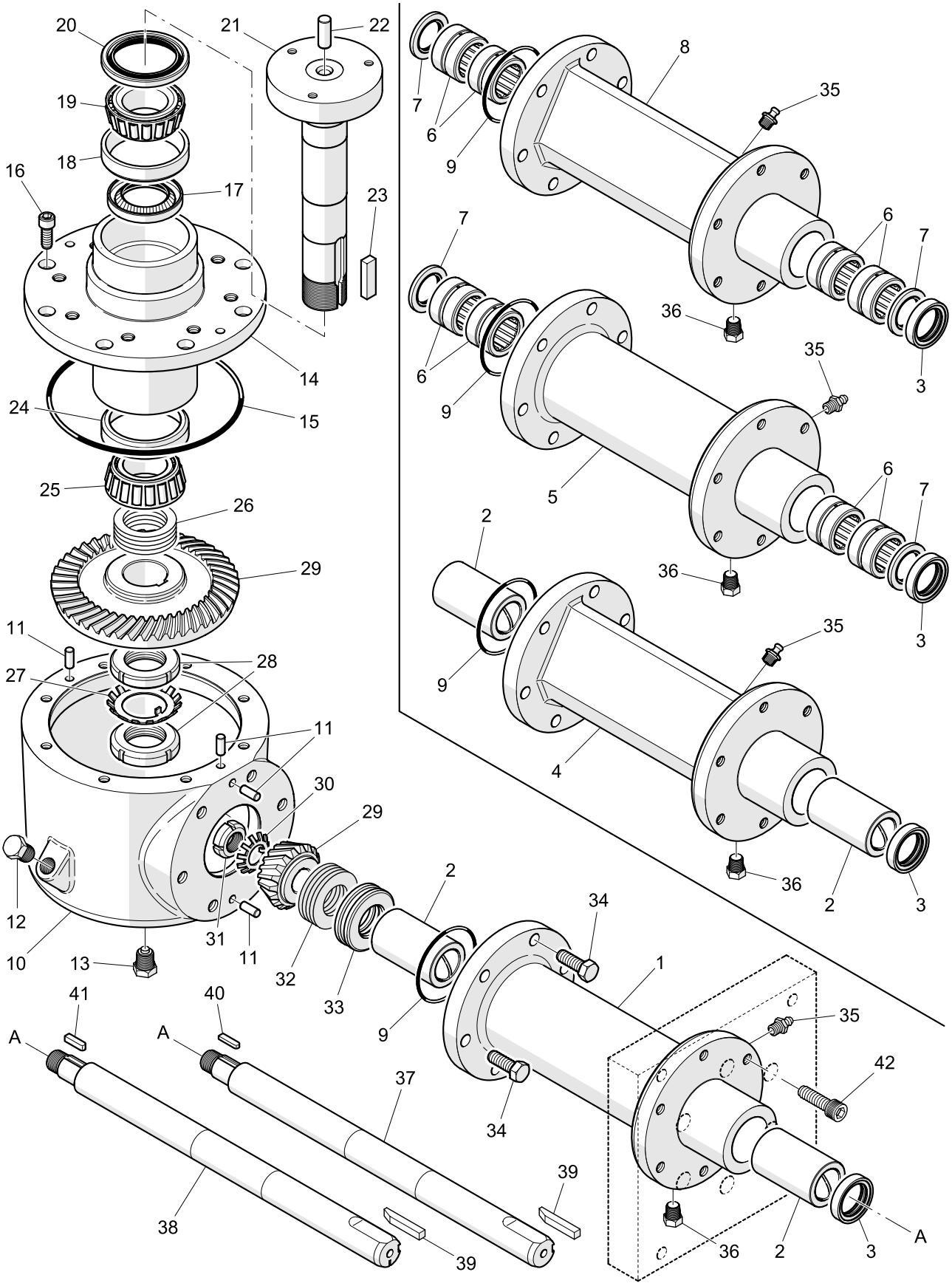

Impeller Drive Assembly	Bearing Housing			Bearings or Bushings			Seals		
Part Number and Description	Item	Qty.	Part Number and Description	Item	Qty.	Part No. and Descrip.	Item	Qty.	Part No.
25706 - Impeller Drive Assembly, s.s., round, with bushings, sealed	1	1	**25694** - Bearing Housing, s.s., round with bushings, o-ring	2	2	**22427** - Bushing, 1.00 x 1.50 x 2.50"	3	1	**22045**
25707 - Impeller Drive Assembly, s.s., angled, with bushings, sealed	4	1	**25712** - Bearing Housing, s.s., angled with bushings, o-ring	2	2	**22427** - Bushing, 1.00 x 1.50 x 2.50"	3	1	**22045**
25708 - Impeller Drive Assembly, s.s., round, roller bearings, sealed	5	1	**25695** - Bearing Housing, s.s., round with roller bearings, o-ring	6	4	**22399** - Roller Bearing	3 7	1 2	**22045** **23856**
25709 - Impeller Drive Assembly, s.s., angled, roller bearings, sealed	8	1	**25711** - Bearing Housing, s.s., angled with roller bearings, o-ring	6	4	**22399** - Roller Bearing	3 7	1 2	**22045** **23856**
25737 - Impeller Drive Assy., s.s., round, roller bearings, sealed, HD	5	1	**25695** - Bearing Housing, s.s., round with roller bearings, o-ring	6	4	**22399** - Roller Bearing	3 7	1 2	**22045** **23856**
25738 - Impeller Drive Assy., s.s., angled, roller bearings, sealed, HD	8	1	**25711** - Bearing Housing, s.s., angled with roller bearings, o-ring	6	4	**22399** - Roller Bearing	3 7	1 2	**22045** **23856**

Item	Quantity	Part Number and Description

All impeller drive assemblies include the following parts:

9	1	**25692** - O-ring, -036 series, Viton
10	1	**25713** - Gear Case, stainless steel, o-rings (includes item 11)
11	4	**37040** - Dowel Pin, 1/4" x 5/8", 416 s.s.
12	1	**22084** - Pipe Plug, 1/4", s.s.
13	1	**25714** - Pipe Plug, 1/4", s.s., magnetic
14	1	**25691** - Impeller Bearing Housing, o-ring, s.s.
15	1	**25693** - O-ring, -255 series, Viton
16	8	**10100** - Socket Head Cap Screw, 5/16-18 x 3/4", s.s.
17	1	**22036** - Oil Seal
–	1	**22037** - Roller Bearing (includes items 18–19)
18	1	**22183** - Roller Bearing Cup, 2-5/8" O.D.
19	1	**22184** - Roller Bearing Cone, 1-3/8" I.D.
20	1	**22044** - Seal
21	1	**22054** - Shaft, impeller (includes item 22)
22	1	**22081** - Dowel Pin, 3/8" x 31/32"
23	1	**22035** - Key
–	1	**22038** - Roller Bearing (includes items 24–25)
24	1	**22183** - Roller Bearing Cup, 2-5/8" O.D.
25	1	**22185** - Roller Bearing Cone, 1-5/16" I.D.
26	1	**22032** - Shims, set of 5, 1.322" I.D.
27	1	**22048** - Lock Washer
28	2	**22047** - Lock Nut
29	1	**22046** - Gears, 8P, 15 and 45 tooth, spiral bevel (matched set)
30	1	**22050** - Lock Washer
31	1	**22049** - Lock Nut
32	1	**22031** - Shims, set of 5, 1.01" I.D.
33	1	**22043** - Thrust Bearing
34	6	**10058** - Hex Head Cap Screw, 3/8-16 x 1", s.s.
35	1	**11401** - Grease Fitting, 1/8", straight, s.s.
36	1	**22564** - Pipe Plug, 1/8", s.s.
37	1	**23498** - Shaft, drive (includes item 39)
38	1	**25686** - Shaft, drive, heavy duty (heavy duty assemblies only; includes item 39)
39	1	**23499** - Key, 1/4" x 1/4" x 1-5/8"
40	1	**25685** - Key, 1/8" x 3/16" x 3/4", hardened
41	1	**17258** - Key, 3/16" x 3/16" x 3/4" (heavy duty assemblies only)
42	6	**10113** - Socket Head Cap Screw, 3/8-16 x 1-1/4", s.s.

Manual Page Number	Revision

10.54-10.55 Parts, Impeller Drive Assemblies: Sealed impeller drive assemblies are now available. See the entry for page 6.9 for more information.

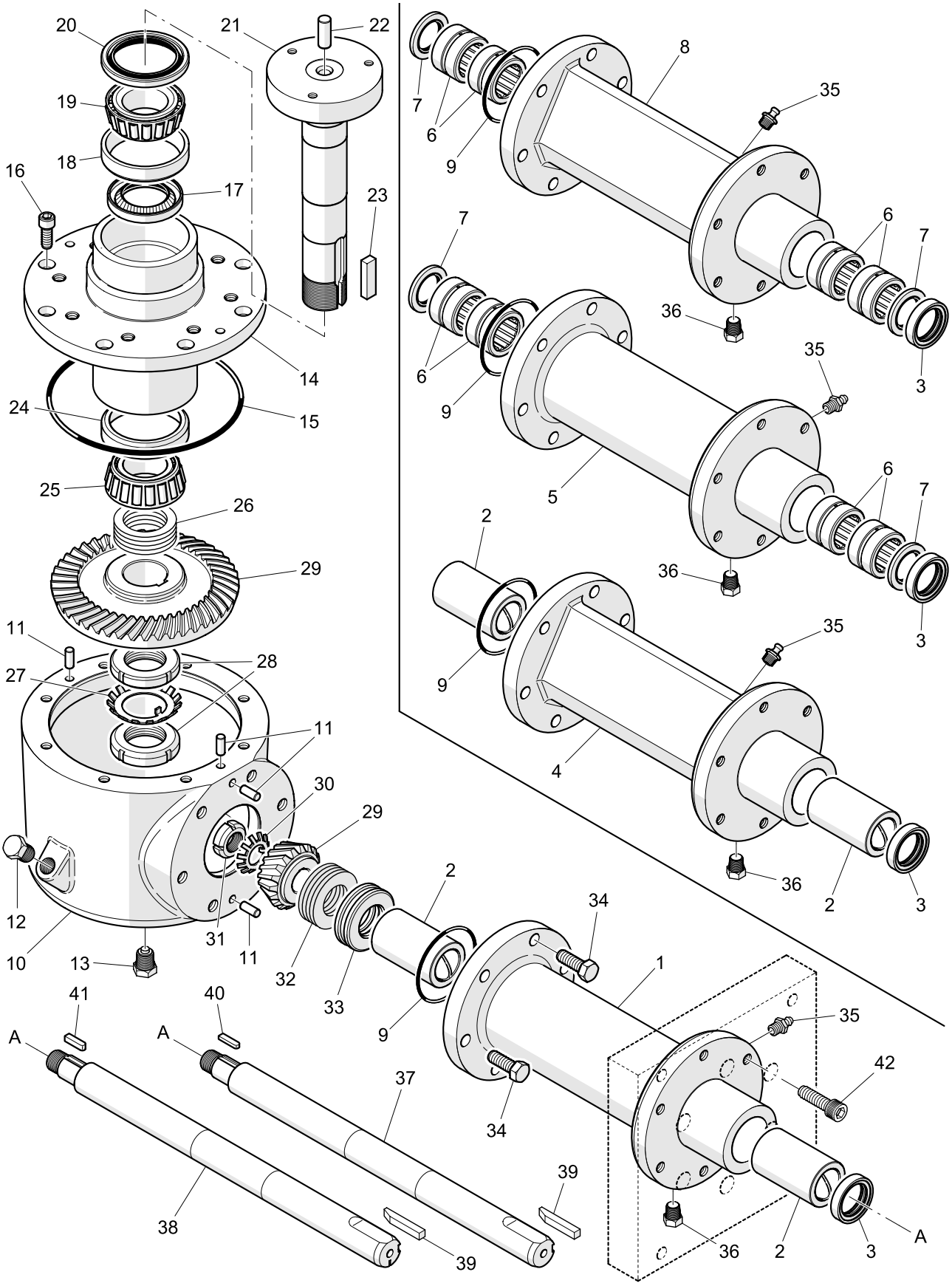

Impeller Drive Assembly	Bearing Housing			Bearings or Bushings			Seals		
Part Number and Description	Item	Qty.	Part Number and Description	Item	Qty.	Part No. and Descrip.	Item	Qty.	Part No.
25706 - Impeller Drive Assembly, s.s., round, with bushings, sealed	1	1	**25694** - Bearing Housing, s.s., round with bushings, o-ring	2	2	**22427** - Bushing, 1.00 x 1.50 x 2.50"	3	1	**22045**
25707 - Impeller Drive Assembly, s.s., angled, with bushings, sealed	4	1	**25712** - Bearing Housing, s.s., angled with bushings, o-ring	2	2	**22427** - Bushing, 1.00 x 1.50 x 2.50"	3	1	**22045**
25708 - Impeller Drive Assembly, s.s., round, roller bearings, sealed	5	1	**25695** - Bearing Housing, s.s., round with roller bearings, o-ring	6	4	**22399** - Roller Bearing	3 7	1 2	**22045** **23856**
25709 - Impeller Drive Assembly, s.s., angled, roller bearings, sealed	8	1	**25711** - Bearing Housing, s.s., angled with roller bearings, o-ring	6	4	**22399** - Roller Bearing	3 7	1 2	**22045** **23856**
25737 - Impeller Drive Assy., s.s., round, roller bearings, sealed, HD	5	1	**25695** - Bearing Housing, s.s., round with roller bearings, o-ring	6	4	**22399** - Roller Bearing	3 7	1 2	**22045** **23856**
25738 - Impeller Drive Assy., s.s., angled, roller bearings, sealed, HD	8	1	**25711** - Bearing Housing, s.s., angled with roller bearings, o-ring	6	4	**22399** - Roller Bearing	3 7	1 2	**22045** **23856**

Item	Quantity	Part Number and Description

All impeller drive assemblies include the following parts:

9	1	**25692** - O-ring, -036 series, Viton
10	1	**25713** - Gear Case, stainless steel, o-rings (includes item 11)
11	4	**37040** - Dowel Pin, 1/4" x 5/8", 416 s.s.
12	1	**22084** - Pipe Plug, 1/4", s.s.
13	1	**25714** - Pipe Plug, 1/4", s.s., magnetic
14	1	**25691** - Impeller Bearing Housing, o-ring, s.s.
15	1	**25693** - O-ring, -255 series, Viton
16	8	**10100** - Socket Head Cap Screw, 5/16-18 x 3/4", s.s.
17	1	**22036** - Oil Seal
–	1	**22037** - Roller Bearing (includes items 18–19)
18	1	**22183** - Roller Bearing Cup, 2-5/8" O.D.
19	1	**22184** - Roller Bearing Cone, 1-3/8" I.D.
20	1	**22044** - Seal
21	1	**22054** - Shaft, impeller (includes item 22)
22	1	**22081** - Dowel Pin, 3/8" x 31/32"
23	1	**22035** - Key
–	1	**22038** - Roller Bearing (includes items 24–25)
24	1	**22183** - Roller Bearing Cup, 2-5/8" O.D.
25	1	**22185** - Roller Bearing Cone, 1-5/16" I.D.
26	1	**22032** - Shims, set of 5, 1.322" I.D.
27	1	**22048** - Lock Washer
28	2	**22047** - Lock Nut
29	1	**22046** - Gears, 8P, 15 and 45 tooth, spiral bevel (matched set)
30	1	**22050** - Lock Washer
31	1	**22049** - Lock Nut
32	1	**22031** - Shims, set of 5, 1.01" I.D.
33	1	**22043** - Thrust Bearing
34	6	**10058** - Hex Head Cap Screw, 3/8-16 x 1", s.s.
35	1	**11401** - Grease Fitting, 1/8", straight, s.s.
36	1	**22564** - Pipe Plug, 1/8", s.s.
37	1	**23498** - Shaft, drive (includes item 39)
38	1	**25686** - Shaft, drive, heavy duty (heavy duty assemblies only; includes item 39)
39	1	**23499** - Key, 1/4" x 1/4" x 1-5/8"
40	1	**25685** - Key, 1/8" x 3/16" x 3/4", hardened
41	1	**17258** - Key, 3/16" x 3/16" x 3/4" (heavy duty assemblies only)
42	6	**10113** - Socket Head Cap Screw, 3/8-16 x 1-1/4", s.s.

A See the Addendum

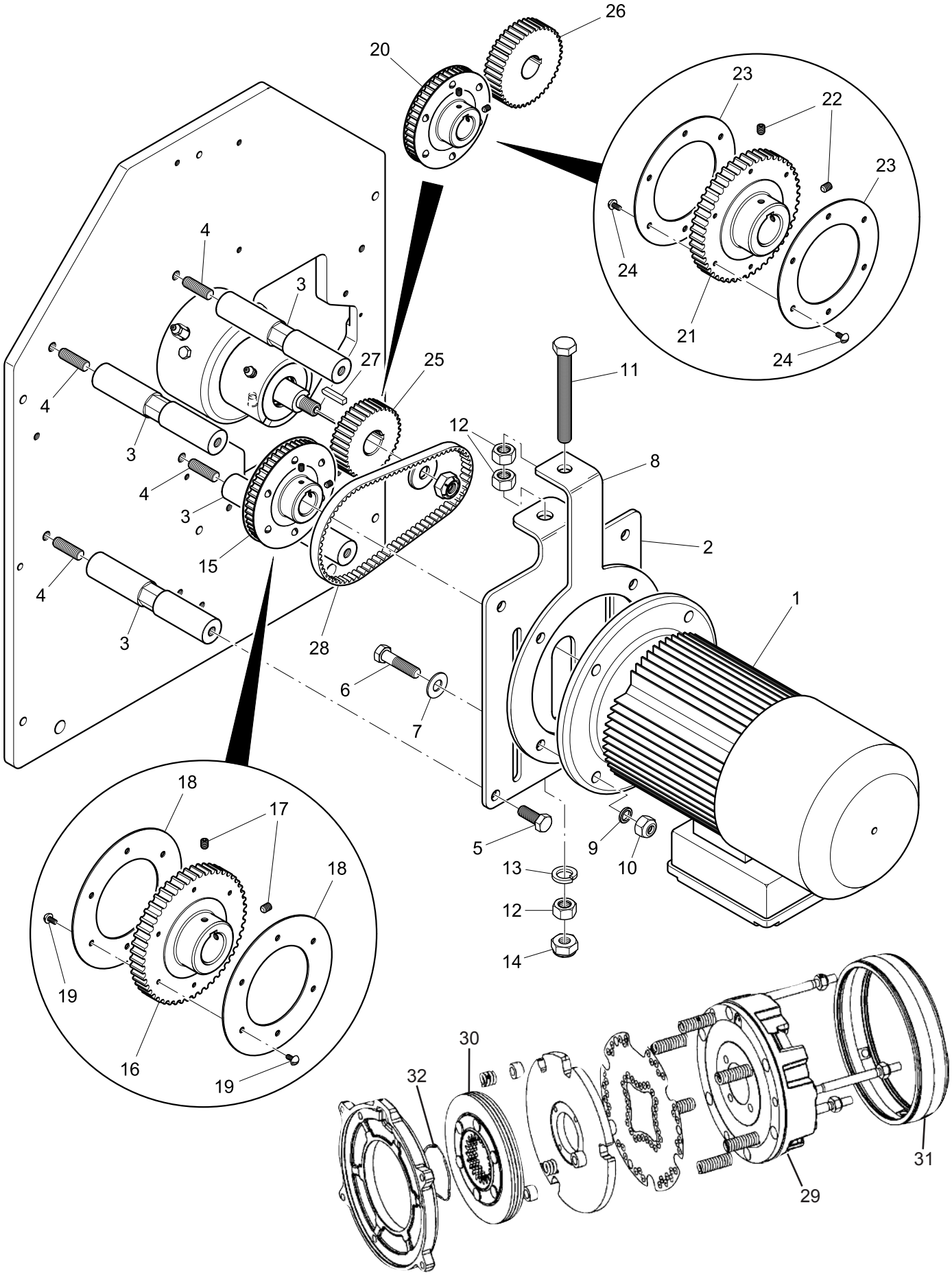

A See the Addendum

Item	Quantity	Part Number and Description
1	1	**58141** - Motor, ETRS, 3 H.P., 200 volt, 50 hertz, with brake
	1	**58116** - Motor, ETRS, 3 H.P., 230/400 volt, with brake
	1	**58115** - Motor, ETRS, 3 H.P., 200/208 volt, 60 hertz, with brake
	1	**58114** - Motor, ETRS, 3 H.P., 230/460 volt, with brake
	1	**58142** - Motor, ETRS, 3 H.P., 380 volt, 60 hertz, with brake
	1	**58117** - Motor, ETRS, 3 H.P., 575 volt, with brake
2	1	**58038** - Motor Mount, spindle
3	4	**58042** - Spacer, motor mount, spindle
4	4	**58131** - Stud, 1/2-13 x 1-1/2"
5	4	**10073** - Hex Head Cap Screw, 1/2-13 x 1-1/4", s.s.
6	4	**10076** - Hex Head Cap Screw, 1/2-13 x 2", s.s.
7	4	**10010** - Washer, flat, 1/2", s.s.
8	1	**58040** - Motor Tension Bracket, spindle
9	4	**53211** - Washer, .516" I.D. x .75" O.D. x .125"
10	4	**10321** - Hex Nut, 1/2-13, s.s., locking
11	1	**58111** - Hex Head Cap Screw, 5/8-11 x 5", full thread
12	3	**10028** - Hex Nut, 5/8-11, s.s.
13	1	**10017** - Lock Washer, 5/8", s.s.
14	1	**10284** - Hex Nut, 5/8-11, s.s., locking
15	1	**58065** - Pulley, timing, 51 teeth, Poly GT (for 50 hertz single speed, includes items 16–19)
16	1	**58063** - Timing Pulley Detail, 51 teeth, Poly GT
17	2	**10136** - Socket Set Screw, 1/4-20 x 5/16", cup point, s.s.
18	2	**58064** - Flange, 3.010" I.D. x 5.25" O.D.
19	12	**10276** - Round Head Machine Screw, 10-24 x 5/16", s.s.
20	1	**58140** - Pulley, timing, 48 teeth, Poly GT (for 50 and 60 hertz with VFD, and 60 hertz single speed, includes items 21–24)
21	1	**58135** - Timing Pulley Detail, 48 teeth, Poly GT
22	2	**10136** - Socket Set Screw, 1/4-20 x 5/16", cup point, s.s.
23	2	**58136** - Flange, 3.01" I.D. x 4.88" O.D.
24	12	**10276** - Round Head Machine Screw, 10-24 x 5/16", s.s.
25	1	**58066** - Pulley, timing, 36 teeth, Poly GT (for 50 hertz single speed)
26	1	**58134** - Pulley, timing, 41 teeth, Poly GT (for 50 and 60 hertz with VFD, and 60 hertz single speed)
27	1	**19029** - Key, 1/4" x 1/4" x 1-11/32"
28	1	**58054** - Timing Belt, Poly Chain GT, 8M-640-12

Repair parts for motor brake

–	1	**21705** - Brake Assembly, 30 lb/ft, SEW, 120 volt (complete brake assembly)
29	1	**21706** - Brake Coil, SEW, 120 VAC, 50/60 Hz
30	1	**21707** - Brake Disc, SEW, BE5 Series
–	1	**21708** - Brake Rectifier, SEW, BGE Series (located in the motor conduit box, not shown)
31	1	**21709** - Brake Sealing Collar, SEW, BE5 Series
32	1	**21710** - Brake Snap Ring, SEW, BE5 Series

Spindle Assembly, Impeller Shaft

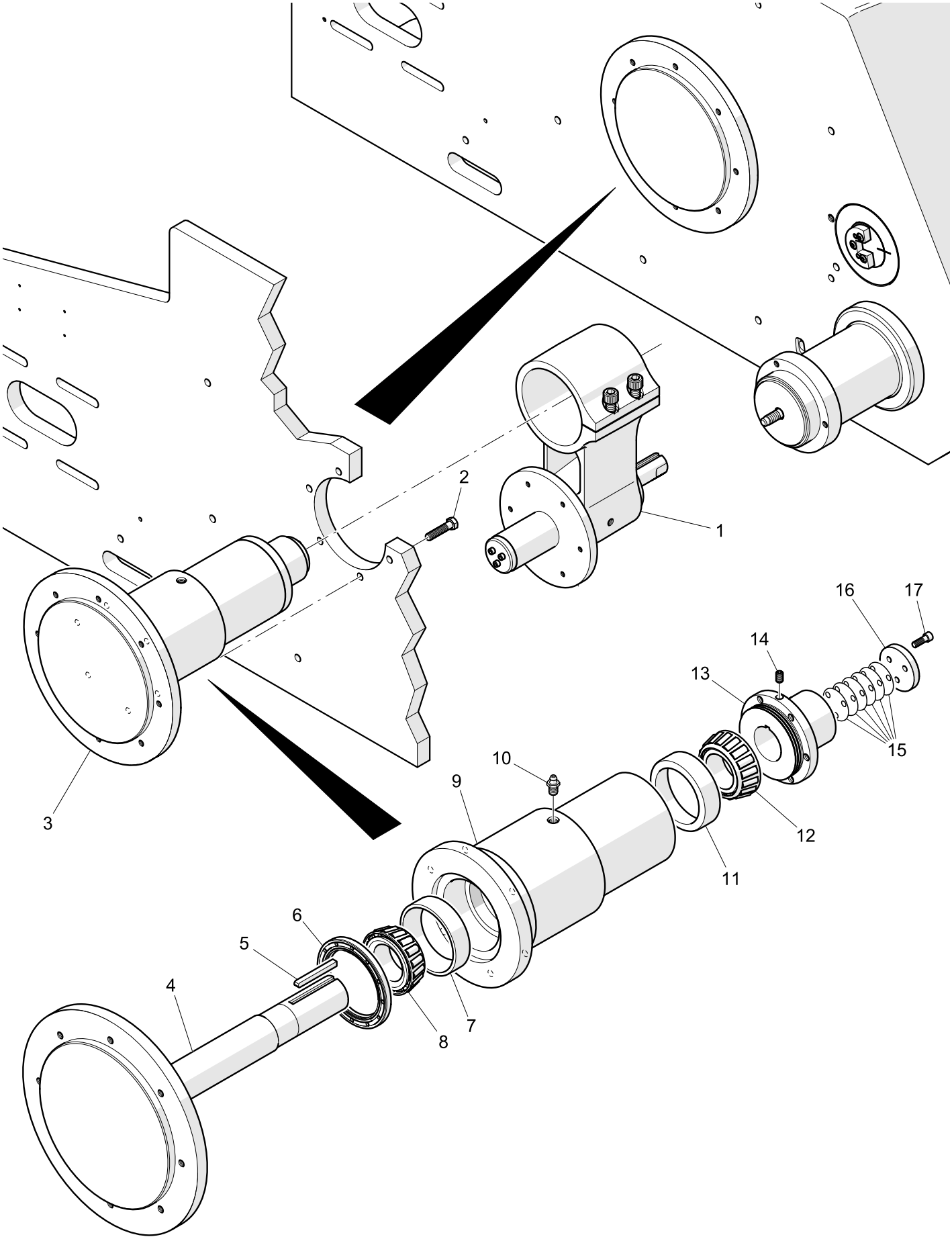

Spindle Assembly, Impeller Shaft

Item	Quantity	Part Number and Description
1	1	* - Spindle Assembly, jack shaft
2	6	**10430** - Hex Head Cap Screw, 3/8-16 x 1-3/8", s.s.
3	1	**43212** - Spindle Assembly, impeller shaft (includes items 4–17)
4	1	**43213** - Impeller Shaft
5	1	**19182** - Key, 1/4" x 1/4" x 2-3/8"
6	1	**43215** - Seal
–	1	**24053** - Roller Bearing (includes items 7–8)
7	1	**24054** - Roller Bearing Cup, 3-7/16" O.D.
8	1	**24058** - Roller Bearing Cone, 1-3/4" I.D.
9	1	**43214** - Bearing Housing, impeller shaft
10	1	**11401** - Grease fitting, 1/8", straight, s.s. (shipping only; remove when installing spindle)
–	1	**24052** - Roller Bearing (includes items 11–12)
11	1	**24054** - Roller Bearing Cup, 3-7/16" O.D.
12	1	**24056** - Roller Bearing Cone, 1-5/8" I.D.
13	1	**42677** - Hub, impeller shaft (includes item 14)
14	1	**10141** - Socket Set Screw, 5/16-18 x 1/2", Nylok, s.s.
15	1	**24140** - Shims, set of six
16	1	**24046** - End Cap
17	3	**10407** - Socket Head Cap Screw, 1/4-20 x 3/4", Nylok

* See Spindle Assembly, Jack Shaft