("Inspection", continued from page 49)

Amplifier: The amplifier and safety switches incorporate self-diagnostic features to help identify the source of problems. The LEDs on the amplifier (Figure 42) will indicate the status of the system:

⚠ **WARNING:** ***The amplifier must be properly wired to function correctly. If the amplifier or sensor is replaced, consult the manufacturer's literature for complete wiring instructions.***

Both green "relay condition" LEDs are illuminated: all circuits are closed and machine is ready for operation.

No LEDs are illuminated: verify power to terminals L1 and L2. If there is power and the LEDs are not illuminated, turn the power disconnect to "**O**" (OFF) and lock out power source. Remove fuses (see Figure 42) and check with ohmmeter. Replace faulty fuse. If problem continues, contact Urschel Laboratories.

Red "relay condition" LEDs and any of the red "switch output" LEDs are illuminated: the circuit for the sensor or resistor assigned to that location is open. If red "switch output" LEDs which correspond to a sensor are illuminated, disconnect and lock out the power source, and perform the safety switch inspection (see "Safety switches", page 49). If red "switch output" LEDs which correspond to a resistor are illuminated, disconnect and lock out the power source, verify the resistance value of the resistor and check the connection for tightness (40 inch ounces or .28 newton meters). Turn power disconnect to "**I**" (ON). If LEDs remain lit, contact Urschel Laboratories.

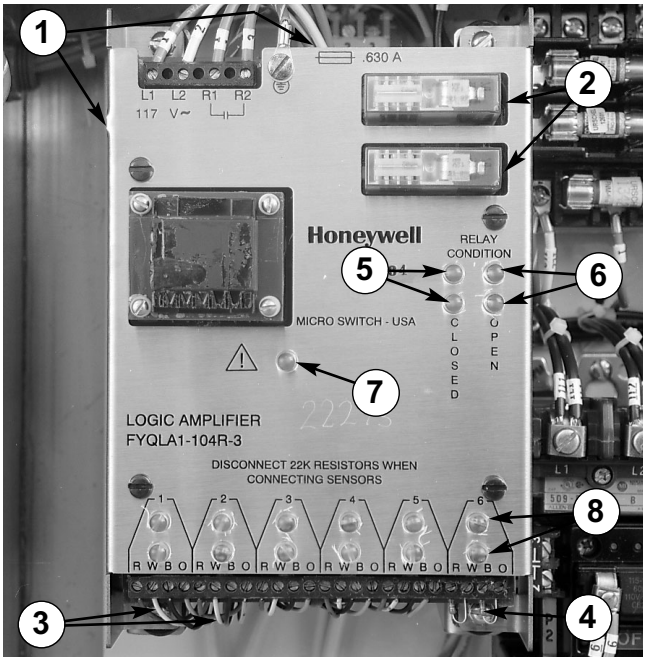

Figure 42 — Amplifier. (1) Fuses, (2) Relays, (3) Sensor Leads, (4) Resistor, (5) Green "Relay Condition" LEDs, (6) Red "Relay Condition" LEDs, (7) Red "Attention" LED, (8) Red "Switch Output" LEDs.

Both red "relay condition" LEDs are illuminated and the red "attention" LED is flashing: the amplifier has detected a fault. To reset the system, turn the power disconnect to "**O**" (OFF) and lock out power source. Perform safety switch inspection (see "Safety switches", page 49). Turn power disconnect to "**I**" (ON). If problem continues, contact Urschel Laboratories.

⚠ **WARNING:** ***Always perform the safety switch test before operating the machine. See "Safety Switch Test", page 24.***

NOTE: *An exchange program is available should the amplifier need replacement; contact Urschel Laboratories for complete information.*

KNIFE CARE GUIDELINES

Knives should be inspected and sharpened or replaced at regular intervals depending upon operating conditions, type of product and hours of operation. Follow these guidelines for best results:

1. **DO NOT attempt to remove all defects from the knife edge by sharpening.** This practice results in shortened knife life. Small defects will not affect knife performance.

2. **Maximum metal removal through sharpening should not exceed recommended limits** (see chart). If excessive metal is removed, knives become more blunt making sharpening difficult and reducing cutting efficiency. Some users may be able to continue sharpening knives longer if the quality of cuts remains acceptable.

3. **New knives should not be installed beside worn knives.** This arrangement may result in poor quality cuts. Keep all the knives from one spindle in a set and sharpen them together. Periodically check knife width or diameter to make sure all the knives in a set are the same size.

SHARPENING EQUIPMENT

Urschel Laboratories manufactures machines to quickly and efficiently sharpen knives. The Model CKG honing machine is used to place the best possible edge on circular knives. The Model WG honing machine is used to sharpen slicing and crosscut knives. See the “SHARP” bulletin or contact Urschel Laboratories for additional information.

RECOMMENDED MINIMUM DIMENSIONS

The following minimum dimensions are intended to give satisfactory results for most applications. However, each customer must look at the quality of cut on his product to determine at what point knives are resharpened beyond usefulness. The minimum dimensions stated are intended to give satisfactory results for most applications. Some customers may be able to get satisfactory results from knives ground smaller, but some may notice a deterioration in quality of cut before the minimum size is reached. Measure slicing and crosscut knives from the cutting edge to the back of the knife unless otherwise noted; measure the diameter of circular knives unless otherwise noted.

Type of Knife	Knife No.	Minimum Size
SLICING	18054 18068 18216	2.416" (61.37 mm) 2.416" (61.37 mm) 2.450" (62.23 mm)
CROSSCUT	18132 19264 48105 48115	*.125" (2.24 mm) 1.264" (32.11 mm) .938" (23.83 mm) 1.392" (35.36 mm)
CIRCULAR	18134 18135 18803	bottom of serrations 2.938" (74.63 mm) bottom of serrations

** .125" of primary bevel should remain after sharpening.*

(“Knife Care”, continued on page 52)

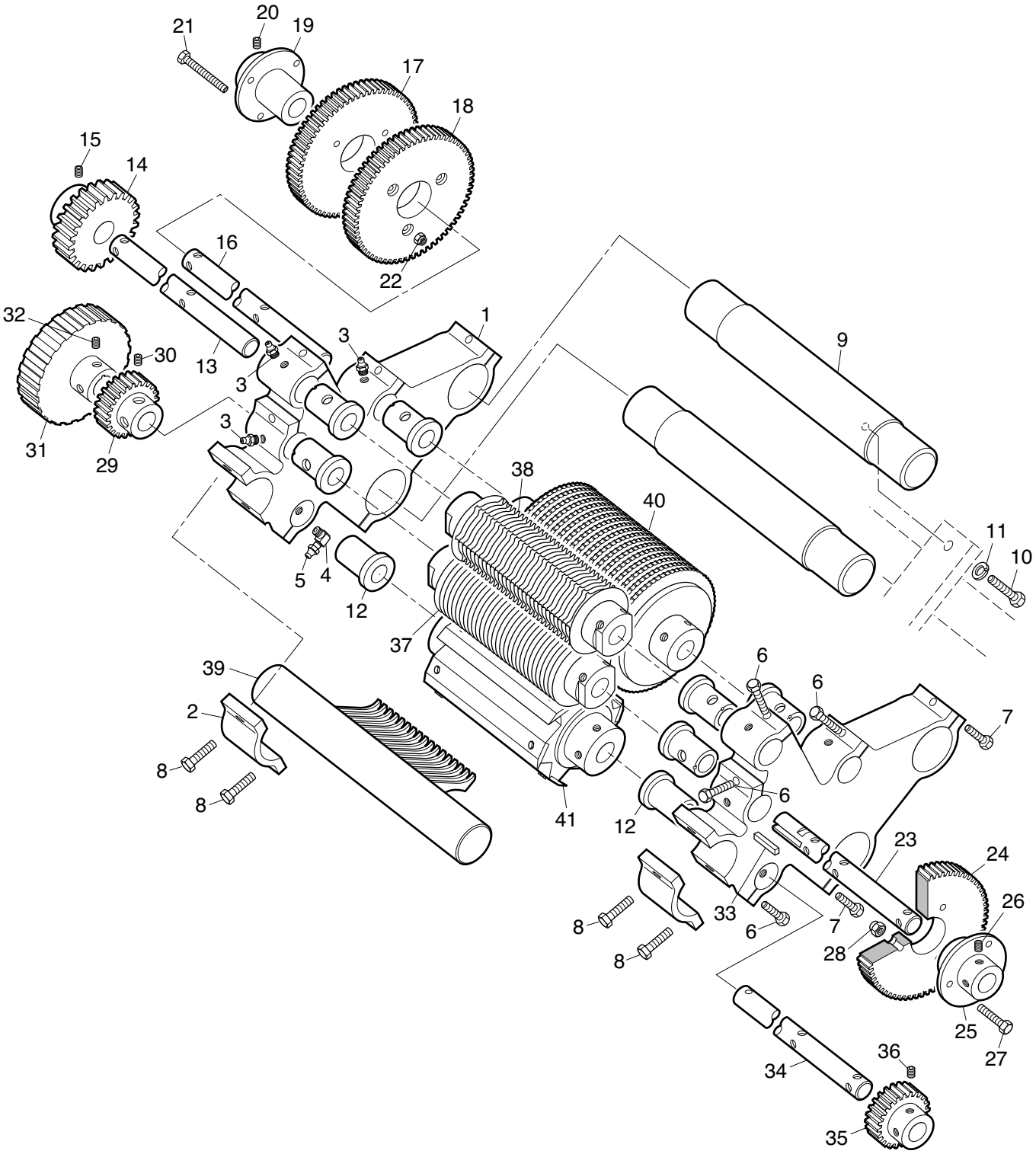
21
20
19
17
18
15
14
16
22
32
30
13
1
3
3
3
9
31
29
38
40
11
10
5
4
12
37
39
6
6
7
2
8
8
6
41
12
23
24
33
6
7
26
28
8
8
25
27
36
34
35

ITEM NO.	PART NO.	DESCRIPTION	QTY.
—	18001	**Side Frame Assembly,** *(includes items 1–8)*	2
1	—	**Side Frame,** *(not sold separately)*	1
2	18141	**Cap for Side Frame**	1
3	11401	**Grease Fitting,** *1/8", straight*	3
4	11410	**Elbow,** *1/8", 90°, male–female*	1
5	11435	**Grease Fitting,** *1/8", straight*	1
6	10047	**Hex Head Cap Screw,** *5/16-18 x 1", s.s.*	4
7	10048	**Hex Head Cap Screw,** *5/16-18 x 1-1/4", s.s.*	2
8	10049	**Hex Head Cap Screw,** *5/16-18 x 1-1/2", s.s.*	2
9	18029	**Spacer Bar**	2
10	10058	**Hex Head Cap Screw,** *3/8-16 x 1", s.s.*	4
11	10015	**Lock Washer,** *3/8", s.s.*	4
12	48041	**Bearing With Thrust Washer,** *3/4 x 1-1/8 x 2-9/16"*	8
13	18019	**Shaft,** *feed roll*	1
14	18026	**Gear,** *26 teeth, bronze, (includes item 15)*	1
15	19233	**Special Set Screw,** *locking*	2
16	18020	**Shaft,** *feed drum*	1
—	18022	**Gear Assembly,** *(includes items 17–22)*	1
17	18023	**Gear,** *49 teeth, nylon*	1
18	18024	**Gear,** *52 teeth, nylon*	1
19	18025	**Hub,** *(includes item 20)*	1
20	19233	**Special Set Screw,** *locking*	2
21	10041	**Hex Head Cap Screw,** *1/4-20 x 1-3/4", s.s.*	3
22	10230	**Hex Nut,** *locking, 1/4-20, s.s.*	3
23	18021	**Shaft,** *circular knife spindle*	1
—	48038	**Gear Assembly,** *(includes items 24–28)*	1
24	48099	**Gear,** *52 teeth, nylon*	1
25	48098	**Hub,** *(includes item 26)*	1
26	19233	**Special Set Screw,** *locking*	2
27	10040	**Hex Head Cap Screw,** *1/4-20 x 1-1/4", s.s.*	3
28	10230	**Hex Nut,** *locking, 1/4-20, s.s.*	3
29	18027	**Gear,** *21 teeth, bronze, (includes item 30)*	1
30	19233	**Special Set Screw,** *locking*	2
31	19007	**Pulley,** *timing belt, 38 teeth, (includes item 32)*	1
32	10140	**Socket Set Screw,** *5/16-18 x 3/8", Nylok*	2
33	18067	**Key**	1
34	48049	**Shaft,** *knife spindle*	1
35	48040	**Gear,** *19 teeth, s.s., (includes item 36)*	1
36	19233	**Special Set Screw,** *locking*	2
37	*	**Circular Knife Spindle Assembly**	1
38	*	**Feed Spindle Assembly**	1
39	*	**Shear Plate**	1
40	*	**Feed Drum**	1
41	*	**Crosscut Knife Spindle Assembly**	1

* See pages 70 thru 79.

NOTE: *s.s. denotes stainless steel*

The addendum is placed in the front of the manual to alert the user to revisions in the manual's contents. Addendum page numbers have an "A" prefix.

Models RA, RA-A Dicers
Addendum to Manual L1635 MAR 97
L2083 OCT 06 (supersedes L1933)

The following revisions apply to this manual:

Page 14 **Specifications, Model RA-A:** In January 1998 the United States Department of Agriculture discontinued its Equipment Acceptance Program in lieu of a processor based Hazard Analysis & Critical Control Point system. By ruling, all U.S.D.A., Meat & Poultry Division approvals of equipment, including those of Urschel® machines, have been eliminated.

Page 16 Under **SIZES OF CUTS**, **Crosscut knives:** the first line should read **.05"**–3" (**1.3mm**–76.2 mm)

Page 50 "NOTE" at the end of the page pertaining to the amplifier exchange program is now deleted. **63737 Amplfier Warranty**: Urschel Laboratories no longer offers an exchange program for the 63737 amplifiers. As of July 1, 2002, there is a warranty on the amplifier of two years from the date the unit is shipped to the customer. An amplifier that fails in the warranty period must be returned to Urschel Laboratories to receive a replacement.
Bottom paragraph on left: (40 inch ounces or .28 newton meters). should read **5.0 inch pounds (80 inch ounces) or 0.56 newton-meters.**

Page 65 **Slicing Unit:** add under item 10, **18301 Knife, slicing, scalloped.** This knife is used for bread and other products with skin or a tough outer layer.

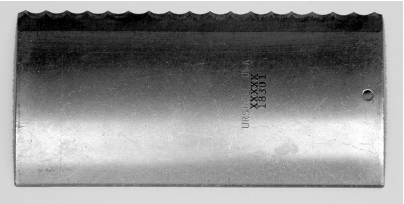

Page 71 **Circular Knife Spindle Assembly:** Item 1 - **48075 Spindle,** *bronze* is now obsolete and replaced by **48280 Spindle,** *stainless steel.* All bronze circular knife spindle assemblies are also obsolete and replaced by the stainless steel assemblies listed in the chart.

Page 73 **Feed Spindle Assembly:** Item 1 - **48075 Spindle,** *bronze* is now obsolete and replaced by **48280 Spindle,** *stainless steel.* All bronze feed spindle assemblies are also obsolete and replaced by the stainless steel assemblies listed in the chart.
Feed Spindle Assemblies, Note in second section of Heavy Duty Parts, the **3/8" size of cut** should read **(9.5 mm)**.

Page 77 **Crosscut Knife Spindle Assembly:** add the following to the chart below the 3/16" (4.8 mm) size of cut:

7/32" (5.6 mm)	—	19666	18133	19667	14

(continued)

Urschel Laboratories, Inc.
2503 Calumet Ave. P.O. Box 2200, Valparaiso, IN 46384
219-464-4811, fax: 219-462-3879

Pages 80–89 **Electrical Assembly:** see pages A4 & A5 for the Electrical Assembly currently in use. Earlier assemblies are shown on pages A6–A9. Repair parts are available for earlier assemblies except as noted below.
Pages 84 & 85:
Item 18 12774 Disconnect Switch Handle is replaced by **21276 or 21280 Disconnect Switch Handle Retrofit Assembly**.
Item 19 12775 Disconnect Switch is replaced by **12985 Disconnect Switch Retrofit Assembly**. Consult the factory for retrofit information.

Page 91 **Motor With Drive Parts:** Item 1, Motor - add the following part numbers:
19412, Motor, 5 H.P., *200-208 volts*
19410, Motor, 5 H.P., *220/380-240/415 volts*
19409, Motor, 5 H.P., *230/460 volts*
19411, Motor, 5 H.P., *575 volts*
55423, Motor, 5 H.P., *200–208 volts, stainless steel*
55422, Motor, 5 H.P., *220–240/380–415 volts, stainless steel*
55408, Motor, 5 H.P., *230/460 volts, stainless steel*
55421, Motor, 5 H.P., *575 volt, stainless steel*

The tabs on the machine frame for attaching the motor base have been changed (see the figure at the right). Items 3, 6 & 7 have been replaced by:
19488, Motor Base, *184T frame*
10059, Hex Head Cap Screw, *3/8-16 x 1-1/4", s.s.*
10249, Hex Nut, *3/8-16, s.s., locking, thin.*
Items 3, 6 & 7 listed on page 91 are available for repair.

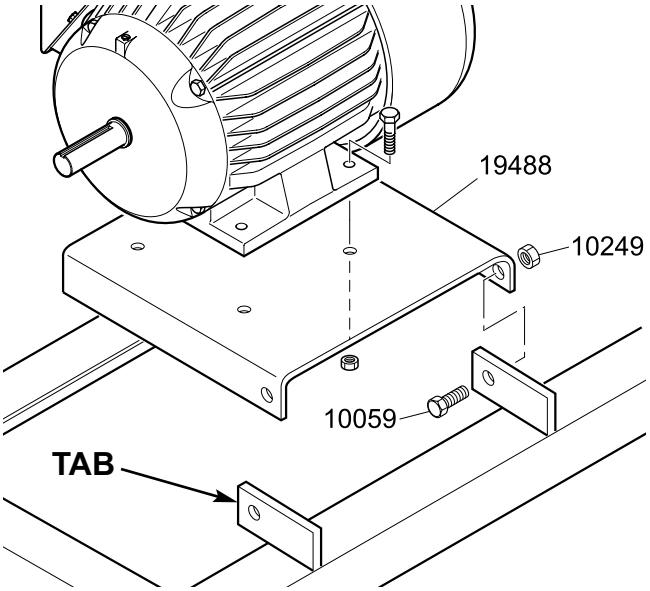

Page 95 **Optional Parts**: Item 1, 19392 is no longer sold as an assembly. Individual parts are available as listed.
Item 6 should read: **10041** Hex Head Cap Screw, 1/4-20 x **1-3/4"**, s.s.
Item 19 should read: **10114** Socket Head Cap Screw, 1/4-20 x **1-1/2"**, s.s.

Add **19400 Spindle Assembly, slicing only**, includes items listed below:
18033, Spacer, *3/4", 2" O.D., .025 thk knife*, quantity: 8
48280, Spindle, *circular knife, s.s.*, quantity: 1
19233, Socket Set Srew, *3/8-24 x .55, Nylok, s.s.*, quantity: 2
48281, Spindle Nut, *s.s.*, quantity: 1

Add **18865 Knife,** *circular, 3", plain, double bevel, .058" thick* (optional knife for 18803).

Urschel Laboratories, Inc.
2503 Calumet Ave. P.O. Box 2200, Valparaiso, IN 46384
219-464-4811, fax: 219-462-3879

Manual Page Number	Revision

10.54-10.55 Parts, Impeller Drive Assemblies: Sealed impeller drive assemblies are now available. See the entry for page 6.9 for more information.

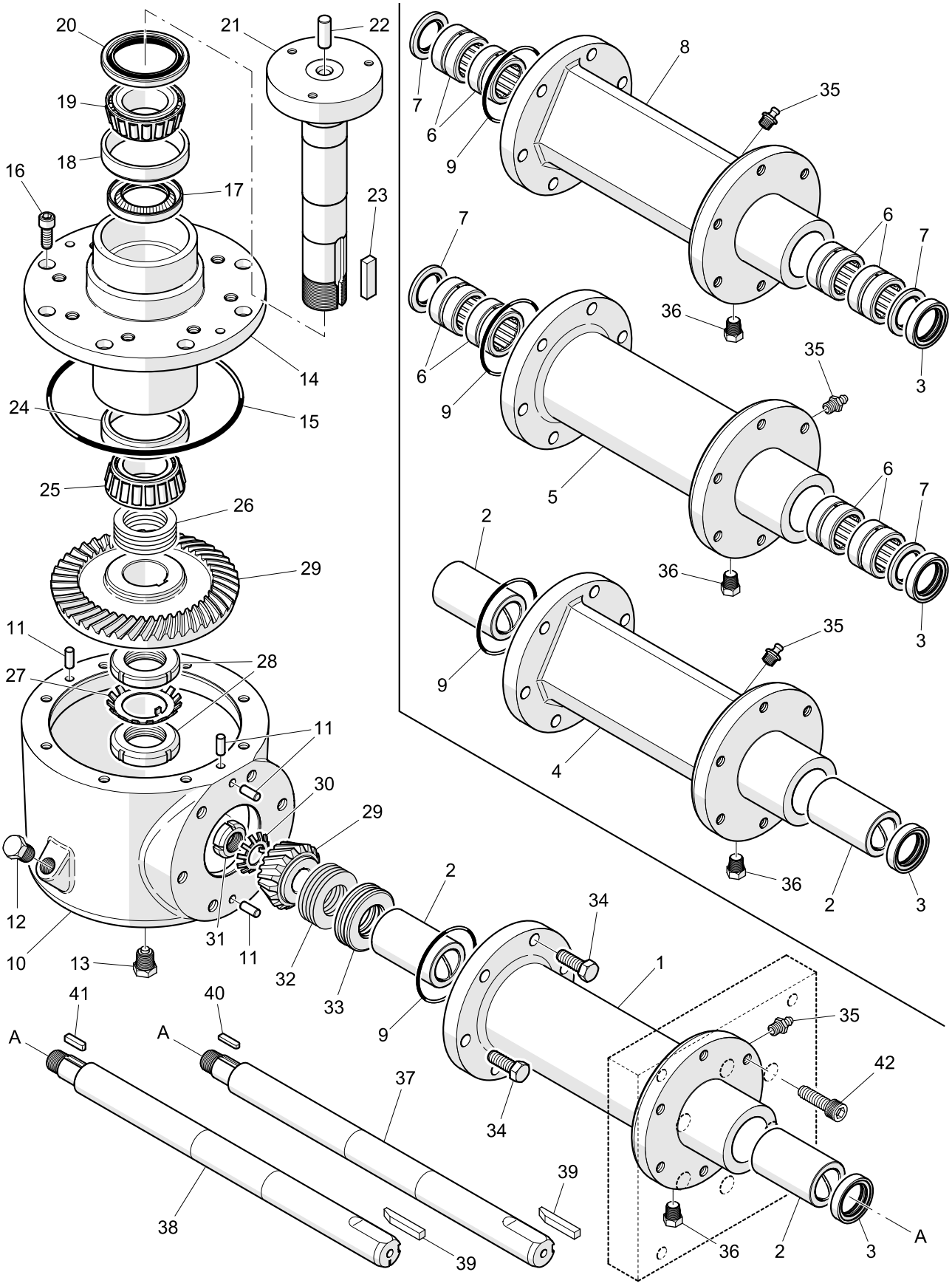

Impeller Drive Assembly	Bearing Housing			Bearings or Bushings			Seals		
Part Number and Description	Item	Qty.	Part Number and Description	Item	Qty.	Part No. and Descrip.	Item	Qty.	Part No.
25706 - Impeller Drive Assembly, s.s., round, with bushings, sealed	1	1	**25694** - Bearing Housing, s.s., round with bushings, o-ring	2	2	**22427** - Bushing, 1.00 x 1.50 x 2.50"	3	1	**22045**
25707 - Impeller Drive Assembly, s.s., angled, with bushings, sealed	4	1	**25712** - Bearing Housing, s.s., angled with bushings, o-ring	2	2	**22427** - Bushing, 1.00 x 1.50 x 2.50"	3	1	**22045**
25708 - Impeller Drive Assembly, s.s., round, roller bearings, sealed	5	1	**25695** - Bearing Housing, s.s., round with roller bearings, o-ring	6	4	**22399** - Roller Bearing	3 7	1 2	**22045** **23856**
25709 - Impeller Drive Assembly, s.s., angled, roller bearings, sealed	8	1	**25711** - Bearing Housing, s.s., angled with roller bearings, o-ring	6	4	**22399** - Roller Bearing	3 7	1 2	**22045** **23856**
25737 - Impeller Drive Assy., s.s., round, roller bearings, sealed, HD	5	1	**25695** - Bearing Housing, s.s., round with roller bearings, o-ring	6	4	**22399** - Roller Bearing	3 7	1 2	**22045** **23856**
25738 - Impeller Drive Assy., s.s., angled, roller bearings, sealed, HD	8	1	**25711** - Bearing Housing, s.s., angled with roller bearings, o-ring	6	4	**22399** - Roller Bearing	3 7	1 2	**22045** **23856**

Item	Quantity	Part Number and Description

All impeller drive assemblies include the following parts:

9	1	**25692** - O-ring, -036 series, Viton
10	1	**25713** - Gear Case, stainless steel, o-rings (includes item 11)
11	4	**37040** - Dowel Pin, 1/4" x 5/8", 416 s.s.
12	1	**22084** - Pipe Plug, 1/4", s.s.
13	1	**25714** - Pipe Plug, 1/4", s.s., magnetic
14	1	**25691** - Impeller Bearing Housing, o-ring, s.s.
15	1	**25693** - O-ring, -255 series, Viton
16	8	**10100** - Socket Head Cap Screw, 5/16-18 x 3/4", s.s.
17	1	**22036** - Oil Seal
–	1	**22037** - Roller Bearing (includes items 18–19)
18	1	**22183** - Roller Bearing Cup, 2-5/8" O.D.
19	1	**22184** - Roller Bearing Cone, 1-3/8" I.D.
20	1	**22044** - Seal
21	1	**22054** - Shaft, impeller (includes item 22)
22	1	**22081** - Dowel Pin, 3/8" x 31/32"
23	1	**22035** - Key
–	1	**22038** - Roller Bearing (includes items 24–25)
24	1	**22183** - Roller Bearing Cup, 2-5/8" O.D.
25	1	**22185** - Roller Bearing Cone, 1-5/16" I.D.
26	1	**22032** - Shims, set of 5, 1.322" I.D.
27	1	**22048** - Lock Washer
28	2	**22047** - Lock Nut
29	1	**22046** - Gears, 8P, 15 and 45 tooth, spiral bevel (matched set)
30	1	**22050** - Lock Washer
31	1	**22049** - Lock Nut
32	1	**22031** - Shims, set of 5, 1.01" I.D.
33	1	**22043** - Thrust Bearing
34	6	**10058** - Hex Head Cap Screw, 3/8-16 x 1", s.s.
35	1	**11401** - Grease Fitting, 1/8", straight, s.s.
36	1	**22564** - Pipe Plug, 1/8", s.s.
37	1	**23498** - Shaft, drive (includes item 39)
38	1	**25686** - Shaft, drive, heavy duty (heavy duty assemblies only; includes item 39)
39	1	**23499** - Key, 1/4" x 1/4" x 1-5/8"
40	1	**25685** - Key, 1/8" x 3/16" x 3/4", hardened
41	1	**17258** - Key, 3/16" x 3/16" x 3/4" (heavy duty assemblies only)
42	6	**10113** - Socket Head Cap Screw, 3/8-16 x 1-1/4", s.s.

Manual Page Number	Revision

10.54-10.55 Parts, Impeller Drive Assemblies: Sealed impeller drive assemblies are now available. See the entry for page 6.9 for more information.

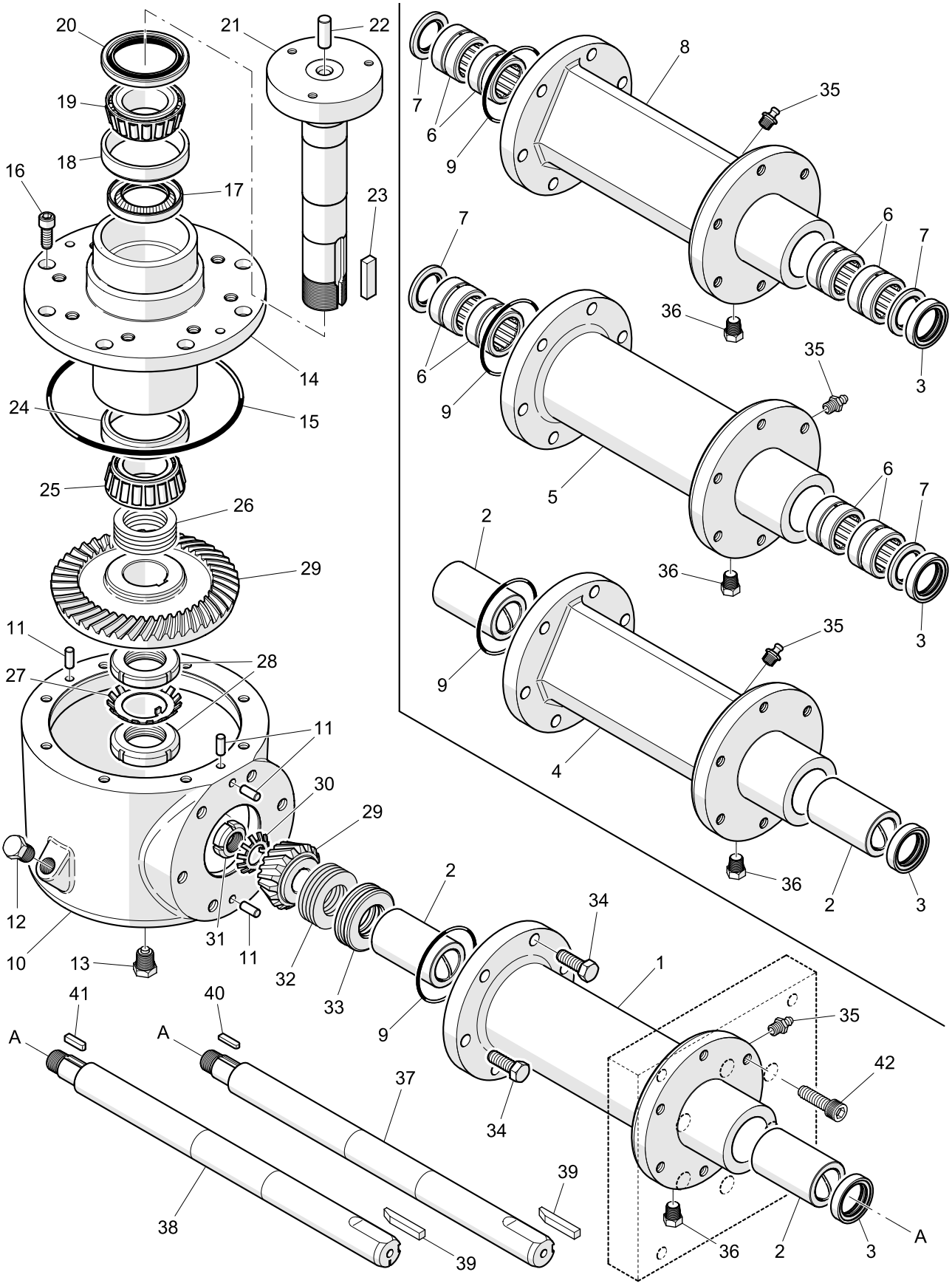

Impeller Drive Assembly	Bearing Housing			Bearings or Bushings			Seals		
Part Number and Description	Item	Qty.	Part Number and Description	Item	Qty.	Part No. and Descrip.	Item	Qty.	Part No.
25706 - Impeller Drive Assembly, s.s., round, with bushings, sealed	1	1	**25694** - Bearing Housing, s.s., round with bushings, o-ring	2	2	**22427** - Bushing, 1.00 x 1.50 x 2.50"	3	1	**22045**
25707 - Impeller Drive Assembly, s.s., angled, with bushings, sealed	4	1	**25712** - Bearing Housing, s.s., angled with bushings, o-ring	2	2	**22427** - Bushing, 1.00 x 1.50 x 2.50"	3	1	**22045**
25708 - Impeller Drive Assembly, s.s., round, roller bearings, sealed	5	1	**25695** - Bearing Housing, s.s., round with roller bearings, o-ring	6	4	**22399** - Roller Bearing	3 7	1 2	**22045** **23856**
25709 - Impeller Drive Assembly, s.s., angled, roller bearings, sealed	8	1	**25711** - Bearing Housing, s.s., angled with roller bearings, o-ring	6	4	**22399** - Roller Bearing	3 7	1 2	**22045** **23856**
25737 - Impeller Drive Assy., s.s., round, roller bearings, sealed, HD	5	1	**25695** - Bearing Housing, s.s., round with roller bearings, o-ring	6	4	**22399** - Roller Bearing	3 7	1 2	**22045** **23856**
25738 - Impeller Drive Assy., s.s., angled, roller bearings, sealed, HD	8	1	**25711** - Bearing Housing, s.s., angled with roller bearings, o-ring	6	4	**22399** - Roller Bearing	3 7	1 2	**22045** **23856**

Item	Quantity	Part Number and Description

All impeller drive assemblies include the following parts:

9	1	**25692** - O-ring, -036 series, Viton
10	1	**25713** - Gear Case, stainless steel, o-rings (includes item 11)
11	4	**37040** - Dowel Pin, 1/4" x 5/8", 416 s.s.
12	1	**22084** - Pipe Plug, 1/4", s.s.
13	1	**25714** - Pipe Plug, 1/4", s.s., magnetic
14	1	**25691** - Impeller Bearing Housing, o-ring, s.s.
15	1	**25693** - O-ring, -255 series, Viton
16	8	**10100** - Socket Head Cap Screw, 5/16-18 x 3/4", s.s.
17	1	**22036** - Oil Seal
–	1	**22037** - Roller Bearing (includes items 18–19)
18	1	**22183** - Roller Bearing Cup, 2-5/8" O.D.
19	1	**22184** - Roller Bearing Cone, 1-3/8" I.D.
20	1	**22044** - Seal
21	1	**22054** - Shaft, impeller (includes item 22)
22	1	**22081** - Dowel Pin, 3/8" x 31/32"
23	1	**22035** - Key
–	1	**22038** - Roller Bearing (includes items 24–25)
24	1	**22183** - Roller Bearing Cup, 2-5/8" O.D.
25	1	**22185** - Roller Bearing Cone, 1-5/16" I.D.
26	1	**22032** - Shims, set of 5, 1.322" I.D.
27	1	**22048** - Lock Washer
28	2	**22047** - Lock Nut
29	1	**22046** - Gears, 8P, 15 and 45 tooth, spiral bevel (matched set)
30	1	**22050** - Lock Washer
31	1	**22049** - Lock Nut
32	1	**22031** - Shims, set of 5, 1.01" I.D.
33	1	**22043** - Thrust Bearing
34	6	**10058** - Hex Head Cap Screw, 3/8-16 x 1", s.s.
35	1	**11401** - Grease Fitting, 1/8", straight, s.s.
36	1	**22564** - Pipe Plug, 1/8", s.s.
37	1	**23498** - Shaft, drive (includes item 39)
38	1	**25686** - Shaft, drive, heavy duty (heavy duty assemblies only; includes item 39)
39	1	**23499** - Key, 1/4" x 1/4" x 1-5/8"
40	1	**25685** - Key, 1/8" x 3/16" x 3/4", hardened
41	1	**17258** - Key, 3/16" x 3/16" x 3/4" (heavy duty assemblies only)
42	6	**10113** - Socket Head Cap Screw, 3/8-16 x 1-1/4", s.s.

Manual Page Number	Revision

10.54-10.55 Parts, Impeller Drive Assemblies: Sealed impeller drive assemblies are now available. See the entry for page 6.9 for more information.

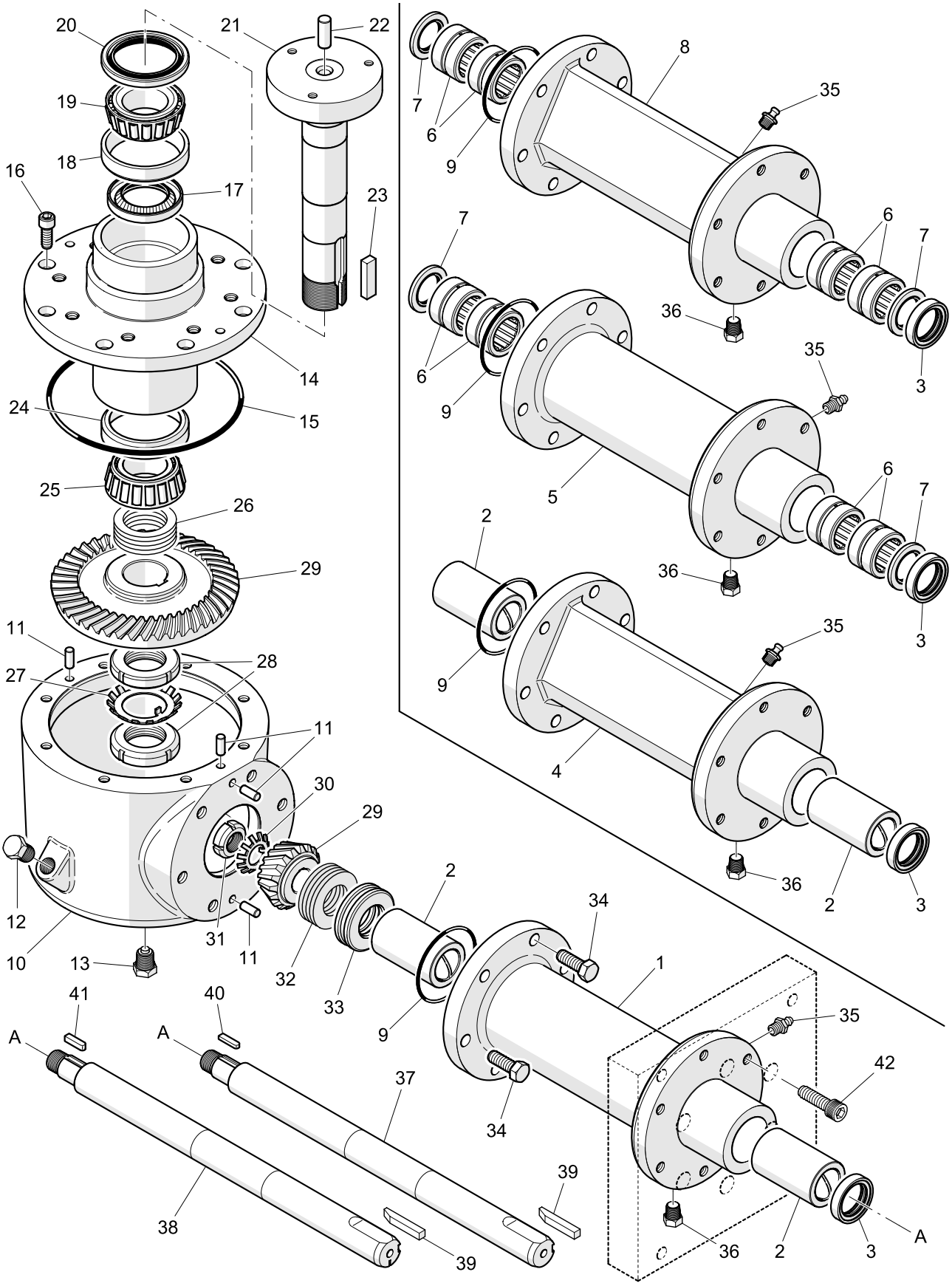

Impeller Drive Assembly	Bearing Housing			Bearings or Bushings			Seals		
Part Number and Description	Item	Qty.	Part Number and Description	Item	Qty.	Part No. and Descrip.	Item	Qty.	Part No.
25706 - Impeller Drive Assembly, s.s., round, with bushings, sealed	1	1	**25694** - Bearing Housing, s.s., round with bushings, o-ring	2	2	**22427** - Bushing, 1.00 x 1.50 x 2.50"	3	1	**22045**
25707 - Impeller Drive Assembly, s.s., angled, with bushings, sealed	4	1	**25712** - Bearing Housing, s.s., angled with bushings, o-ring	2	2	**22427** - Bushing, 1.00 x 1.50 x 2.50"	3	1	**22045**
25708 - Impeller Drive Assembly, s.s., round, roller bearings, sealed	5	1	**25695** - Bearing Housing, s.s., round with roller bearings, o-ring	6	4	**22399** - Roller Bearing	3 7	1 2	**22045** **23856**
25709 - Impeller Drive Assembly, s.s., angled, roller bearings, sealed	8	1	**25711** - Bearing Housing, s.s., angled with roller bearings, o-ring	6	4	**22399** - Roller Bearing	3 7	1 2	**22045** **23856**
25737 - Impeller Drive Assy., s.s., round, roller bearings, sealed, HD	5	1	**25695** - Bearing Housing, s.s., round with roller bearings, o-ring	6	4	**22399** - Roller Bearing	3 7	1 2	**22045** **23856**
25738 - Impeller Drive Assy., s.s., angled, roller bearings, sealed, HD	8	1	**25711** - Bearing Housing, s.s., angled with roller bearings, o-ring	6	4	**22399** - Roller Bearing	3 7	1 2	**22045** **23856**

Item	Quantity	Part Number and Description

All impeller drive assemblies include the following parts:

9	1	**25692** - O-ring, -036 series, Viton
10	1	**25713** - Gear Case, stainless steel, o-rings (includes item 11)
11	4	**37040** - Dowel Pin, 1/4" x 5/8", 416 s.s.
12	1	**22084** - Pipe Plug, 1/4", s.s.
13	1	**25714** - Pipe Plug, 1/4", s.s., magnetic
14	1	**25691** - Impeller Bearing Housing, o-ring, s.s.
15	1	**25693** - O-ring, -255 series, Viton
16	8	**10100** - Socket Head Cap Screw, 5/16-18 x 3/4", s.s.
17	1	**22036** - Oil Seal
–	1	**22037** - Roller Bearing (includes items 18–19)
18	1	**22183** - Roller Bearing Cup, 2-5/8" O.D.
19	1	**22184** - Roller Bearing Cone, 1-3/8" I.D.
20	1	**22044** - Seal
21	1	**22054** - Shaft, impeller (includes item 22)
22	1	**22081** - Dowel Pin, 3/8" x 31/32"
23	1	**22035** - Key
–	1	**22038** - Roller Bearing (includes items 24–25)
24	1	**22183** - Roller Bearing Cup, 2-5/8" O.D.
25	1	**22185** - Roller Bearing Cone, 1-5/16" I.D.
26	1	**22032** - Shims, set of 5, 1.322" I.D.
27	1	**22048** - Lock Washer
28	2	**22047** - Lock Nut
29	1	**22046** - Gears, 8P, 15 and 45 tooth, spiral bevel (matched set)
30	1	**22050** - Lock Washer
31	1	**22049** - Lock Nut
32	1	**22031** - Shims, set of 5, 1.01" I.D.
33	1	**22043** - Thrust Bearing
34	6	**10058** - Hex Head Cap Screw, 3/8-16 x 1", s.s.
35	1	**11401** - Grease Fitting, 1/8", straight, s.s.
36	1	**22564** - Pipe Plug, 1/8", s.s.
37	1	**23498** - Shaft, drive (includes item 39)
38	1	**25686** - Shaft, drive, heavy duty (heavy duty assemblies only; includes item 39)
39	1	**23499** - Key, 1/4" x 1/4" x 1-5/8"
40	1	**25685** - Key, 1/8" x 3/16" x 3/4", hardened
41	1	**17258** - Key, 3/16" x 3/16" x 3/4" (heavy duty assemblies only)
42	6	**10113** - Socket Head Cap Screw, 3/8-16 x 1-1/4", s.s.

A See the Addendum

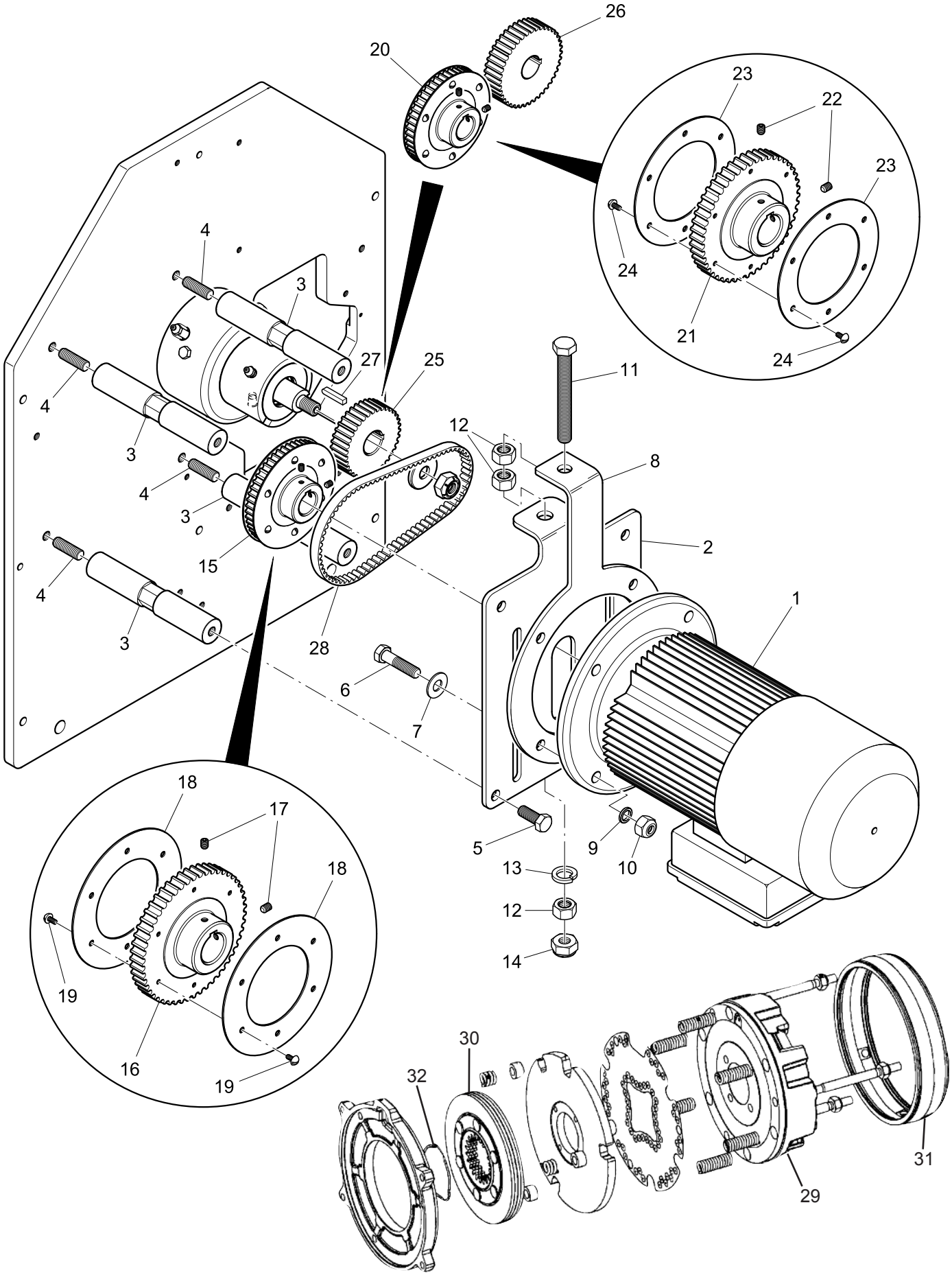

A See the Addendum

Item	Quantity	Part Number and Description
1	1	**58141** - Motor, ETRS, 3 H.P., 200 volt, 50 hertz, with brake
	1	**58116** - Motor, ETRS, 3 H.P., 230/400 volt, with brake
	1	**58115** - Motor, ETRS, 3 H.P., 200/208 volt, 60 hertz, with brake
	1	**58114** - Motor, ETRS, 3 H.P., 230/460 volt, with brake
	1	**58142** - Motor, ETRS, 3 H.P., 380 volt, 60 hertz, with brake
	1	**58117** - Motor, ETRS, 3 H.P., 575 volt, with brake
2	1	**58038** - Motor Mount, spindle
3	4	**58042** - Spacer, motor mount, spindle
4	4	**58131** - Stud, 1/2-13 x 1-1/2"
5	4	**10073** - Hex Head Cap Screw, 1/2-13 x 1-1/4", s.s.
6	4	**10076** - Hex Head Cap Screw, 1/2-13 x 2", s.s.
7	4	**10010** - Washer, flat, 1/2", s.s.
8	1	**58040** - Motor Tension Bracket, spindle
9	4	**53211** - Washer, .516" I.D. x .75" O.D. x .125"
10	4	**10321** - Hex Nut, 1/2-13, s.s., locking
11	1	**58111** - Hex Head Cap Screw, 5/8-11 x 5", full thread
12	3	**10028** - Hex Nut, 5/8-11, s.s.
13	1	**10017** - Lock Washer, 5/8", s.s.
14	1	**10284** - Hex Nut, 5/8-11, s.s., locking
15	1	**58065** - Pulley, timing, 51 teeth, Poly GT (for 50 hertz single speed, includes items 16–19)
16	1	**58063** - Timing Pulley Detail, 51 teeth, Poly GT
17	2	**10136** - Socket Set Screw, 1/4-20 x 5/16", cup point, s.s.
18	2	**58064** - Flange, 3.010" I.D. x 5.25" O.D.
19	12	**10276** - Round Head Machine Screw, 10-24 x 5/16", s.s.
20	1	**58140** - Pulley, timing, 48 teeth, Poly GT (for 50 and 60 hertz with VFD, and 60 hertz single speed, includes items 21–24)
21	1	**58135** - Timing Pulley Detail, 48 teeth, Poly GT
22	2	**10136** - Socket Set Screw, 1/4-20 x 5/16", cup point, s.s.
23	2	**58136** - Flange, 3.01" I.D. x 4.88" O.D.
24	12	**10276** - Round Head Machine Screw, 10-24 x 5/16", s.s.
25	1	**58066** - Pulley, timing, 36 teeth, Poly GT (for 50 hertz single speed)
26	1	**58134** - Pulley, timing, 41 teeth, Poly GT (for 50 and 60 hertz with VFD, and 60 hertz single speed)
27	1	**19029** - Key, 1/4" x 1/4" x 1-11/32"
28	1	**58054** - Timing Belt, Poly Chain GT, 8M-640-12

Repair parts for motor brake

–	1	**21705** - Brake Assembly, 30 lb/ft, SEW, 120 volt (complete brake assembly)
29	1	**21706** - Brake Coil, SEW, 120 VAC, 50/60 Hz
30	1	**21707** - Brake Disc, SEW, BE5 Series
–	1	**21708** - Brake Rectifier, SEW, BGE Series (located in the motor conduit box, not shown)
31	1	**21709** - Brake Sealing Collar, SEW, BE5 Series
32	1	**21710** - Brake Snap Ring, SEW, BE5 Series

Spindle Assembly, Impeller Shaft

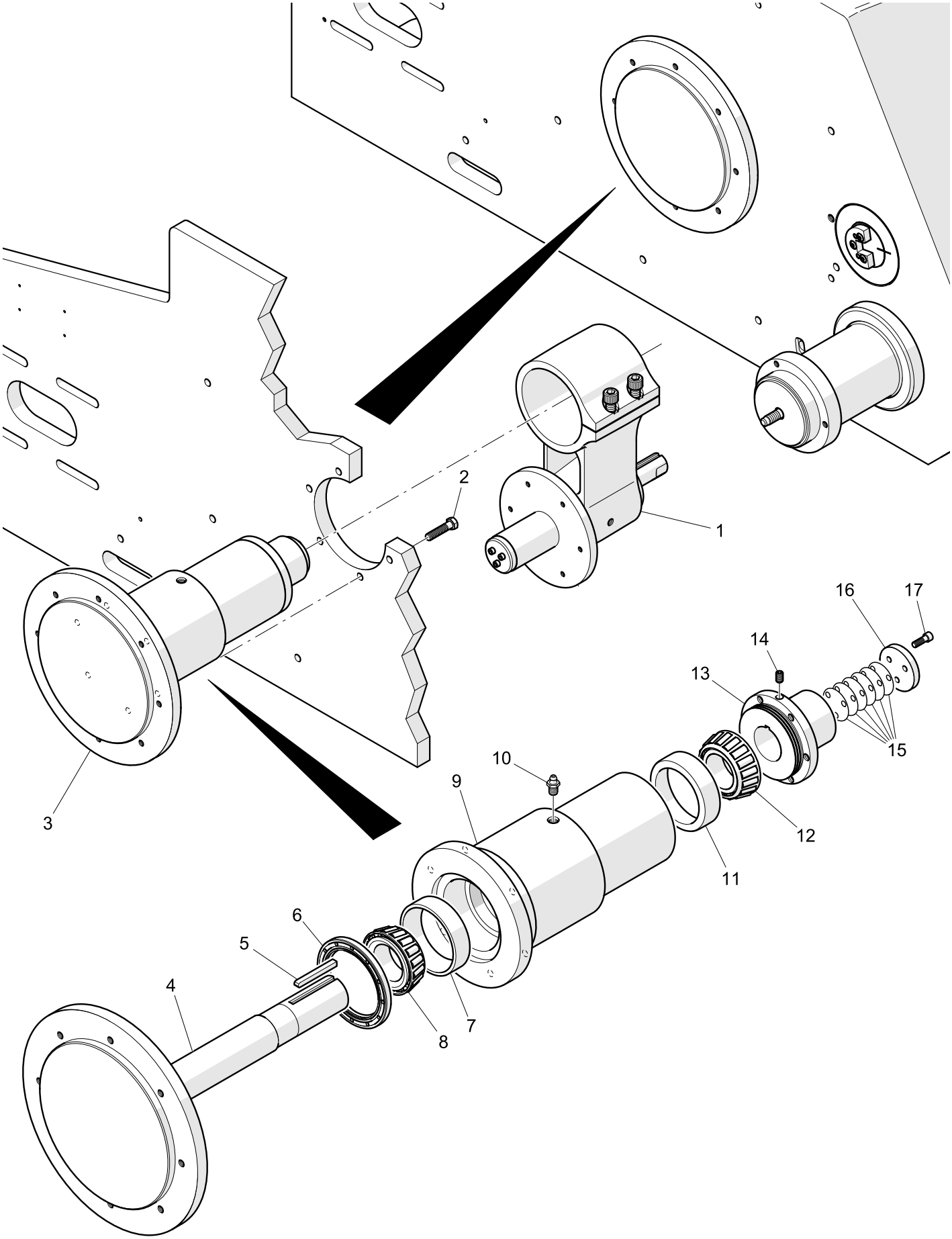

Spindle Assembly, Impeller Shaft

Item	Quantity	Part Number and Description
1	1	* - Spindle Assembly, jack shaft
2	6	**10430** - Hex Head Cap Screw, 3/8-16 x 1-3/8", s.s.
3	1	**43212** - Spindle Assembly, impeller shaft (includes items 4–17)
4	1	**43213** - Impeller Shaft
5	1	**19182** - Key, 1/4" x 1/4" x 2-3/8"
6	1	**43215** - Seal
–	1	**24053** - Roller Bearing (includes items 7–8)
7	1	**24054** - Roller Bearing Cup, 3-7/16" O.D.
8	1	**24058** - Roller Bearing Cone, 1-3/4" I.D.
9	1	**43214** - Bearing Housing, impeller shaft
10	1	**11401** - Grease fitting, 1/8", straight, s.s. (shipping only; remove when installing spindle)
–	1	**24052** - Roller Bearing (includes items 11–12)
11	1	**24054** - Roller Bearing Cup, 3-7/16" O.D.
12	1	**24056** - Roller Bearing Cone, 1-5/8" I.D.
13	1	**42677** - Hub, impeller shaft (includes item 14)
14	1	**10141** - Socket Set Screw, 5/16-18 x 1/2", Nylok, s.s.
15	1	**24140** - Shims, set of six
16	1	**24046** - End Cap
17	3	**10407** - Socket Head Cap Screw, 1/4-20 x 3/4", Nylok

* See Spindle Assembly, Jack Shaft

Feed Assembly, .650 Microcut (62662)

See the addendum for updated information

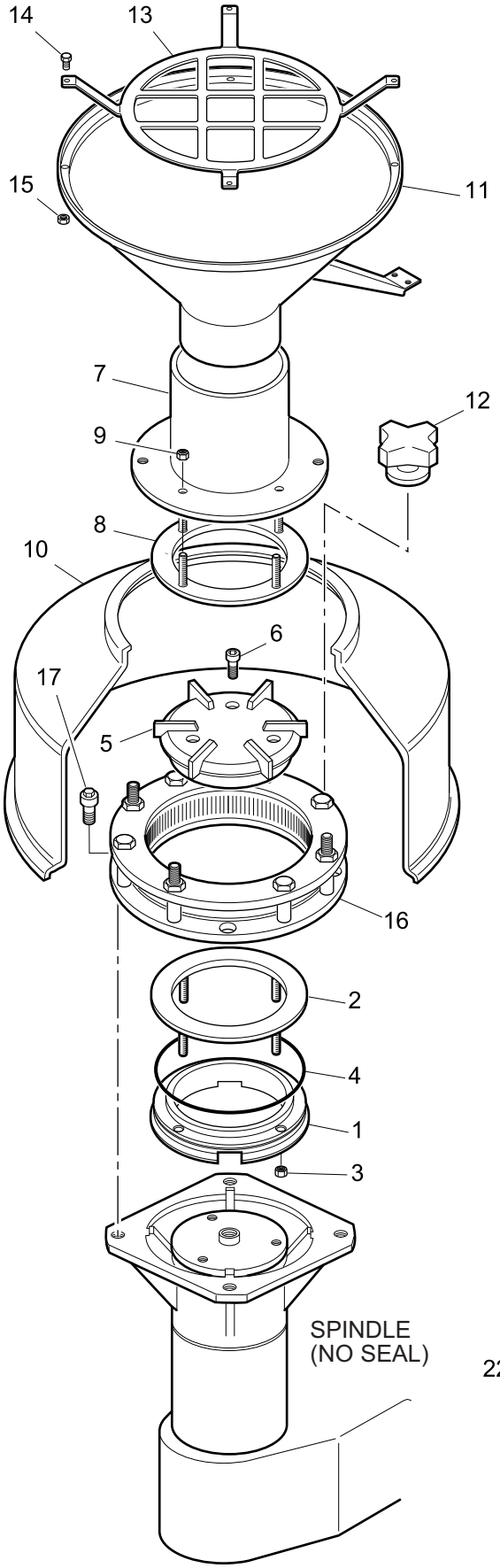

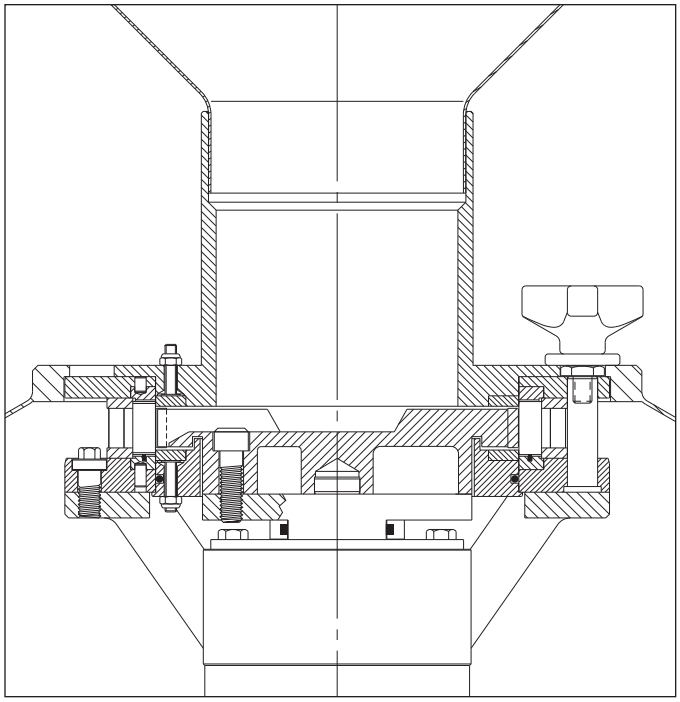

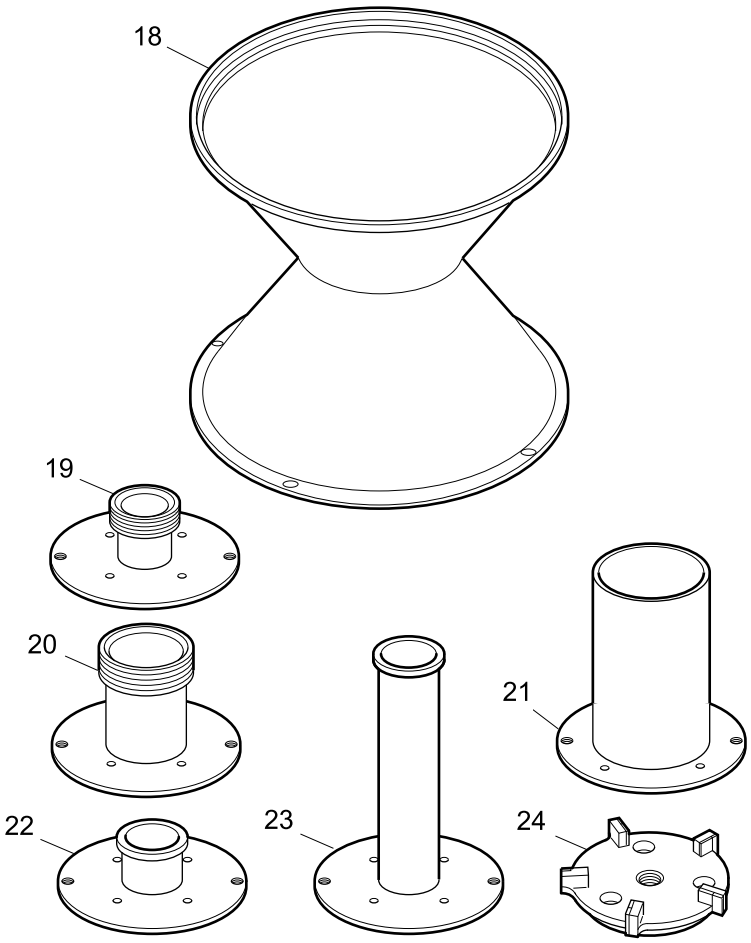

Feed Assembly, .650 Microcut (62662)

ITEM NO.	PART NO.	DESCRIPTION	QTY.
—	62662	**Feed Assembly,** *1700, .650 microcut, (includes items 1–15)*	1
1	62185	**Lower Retaining Ring**	1
2	62175	**Wear Ring**	1
3	10258	**Hex Nut,** *10-32, s.s., locking*	4
4	62180	**"O" Ring,** *1/8 x 5-5/8 x 5-7/8"*	1
5	66060	**Impeller,** *6 paddle, .650 microcut*	1
6	10113	**Socket Head Cap Screw,** *3/8-16 x 1-1/4", s.s.*	3
7	62623	**Feed Adapter,** *.650 impeller*	1
8	62175	**Wear Ring**	1
9	10258	**Hex Nut,** *10-32, s.s., locking*	4
10	62652	**Upper Enclosure,** *microcut head*	1
11	63689	**Funnel Hopper**	1
12	62287	**Hand Knob with Washer,** *5/16-18*	4
13	63450	**Hopper Grid**	1
14	10316	**Hex Head Cap Screw,** *10-24 x 1/2", s.s.*	4
15	10231	**Hex Nut,** *10-24, s.s., locking*	4
16	*	**Microcut Head,** *(includes item 17)*	1
17	*	**Hex Head Cap Screw,** *special*	4
		ALTERNATE PARTS	
18	63691	**Conical Feed Hopper,** *(replaces hopper grid, item 13)*	1
19	62777	**Feed Adapter,** *2" threaded, .650 impeller* **	1
20	62532	**Feed Adapter,** *3" threaded, .650 impeller* **	1
21	62706	**Feed Adapter,** *4.50" O.D., .650 impeller*	1
22	62585	**Feed Adapter,** *2" Tri-Clamp, .650 impeller*	1
23	62526	**Feed Adapter,** *2" Tri-Clamp, 12", .650 impeller*	1
24	66303	**Impeller**, *5 paddle, .650 microcut*	1

* See pages 132 & 134.
** Sanitary Acme thread, bevel seat fitting.

Feed Assembly, 3" Cutting Head w/Teflon Seal (63930)

See the addendum for updated information

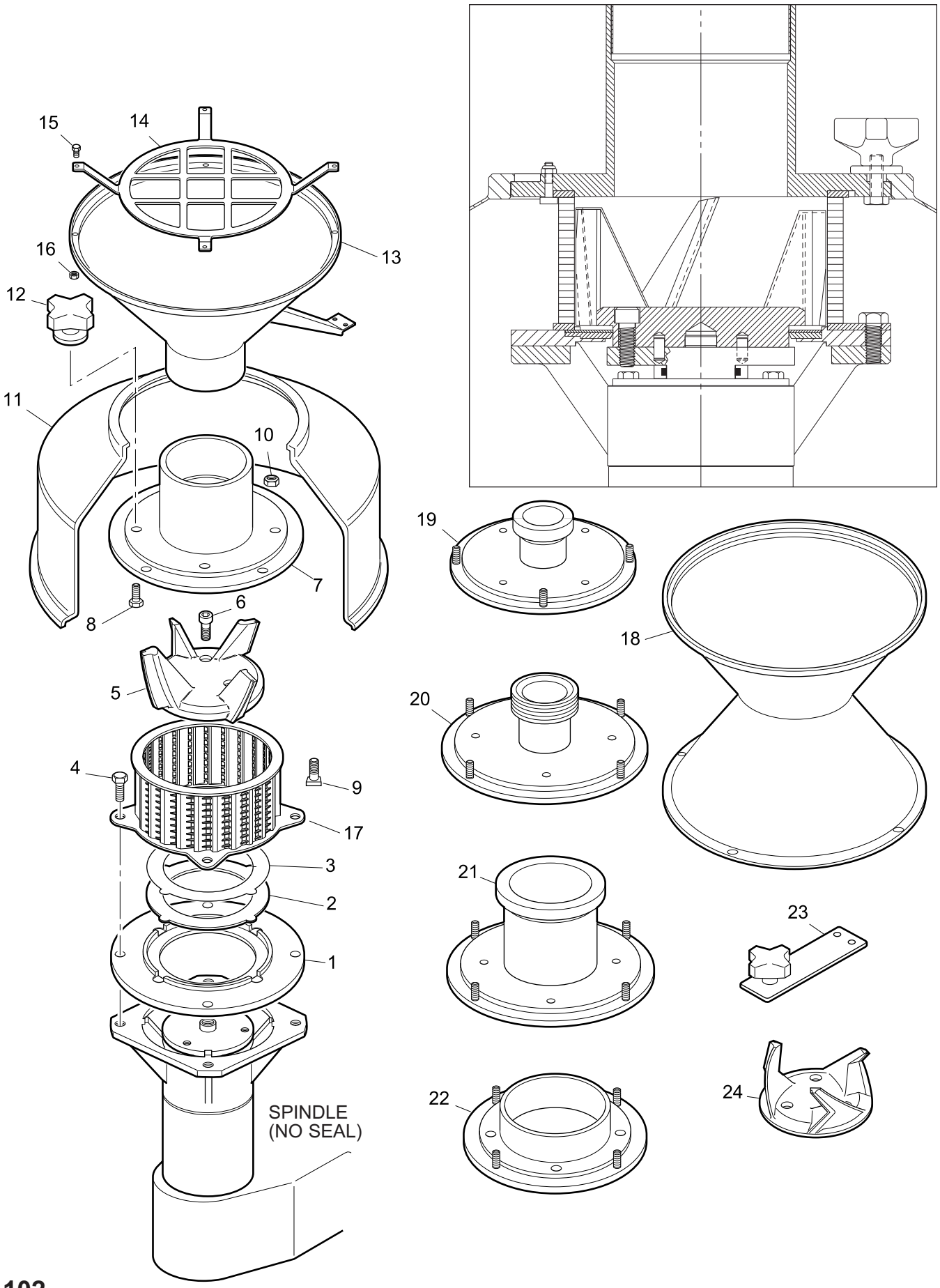

Feed Assembly, 3" Cutting Head w/Teflon Seal (63930)

ITEM NO.	PART NO.	DESCRIPTION	QTY.
—	63930	**Feed Assembly,** *1700, 3", w/teflon seal, (includes items 1–16)*	1
1	62693	**Cutting Head Adapter Plate**	1
2	61784	**Seal**	1
3	61785	**Seal Cover**	1
4	10058	**Hex Head Cap Screw,** *3/8-16 x 1", s.s.*	4
5	66859	**Impeller,** *4 paddle, di-o-cut, 3", seal*	1
6	10408	**Socket Head Cap Screw,** *3/8-16 x 1-1/8", s.s.*	3
7	62614	**Feed Adapter,** *4.05" I.D. x 4.094", (includes item 8)*	1
8	10047	**Hex Head Cap Screw,** *5/16-18 x 1"*	4
9	62166	**Clamp Screw**	4
10	10230	**Hex Nut,** *1/4-20, s.s., locking, thick*	4
11	63736	**Upper Enclosure,** *3", sealed impeller*	1
12	62287	**Hand Knob w/Washer,** *5/16-18*	4
13	63689	**Funnel Hopper**	1
14	63450	**Hopper Grid**	1
15	10316	**Hex Head Cap Screw,** *10-24 x 1/2", s.s.*	4
16	10231	**Hex Nut,** *10-24, s.s., locking*	4
17	*	**Cutting Head,** *3"*	1
		ALTERNATE PARTS	
18	63691	**Conical Feed Hopper,** *(replaces hopper grid, item 14)*	1
19	67143	**Feed Adapter,** *2" Tri-Clamp*	1
20	62626	**Feed Adapter,** *3" threaded* **	1
21	62852	**Feed Adapter,** *4" Tri-Clamp*	1
22	62630	**Feed Adapter,** *5.00" I.D. x 1.937", (requires 63690 funnel hopper)*	1
23	63752	**Actuator Bracket,** *(use with alternate feed adapters that do not require the use of a funnel hopper; replaces one hand knob, item 12)*	1
24	66842	**Impeller,** *3 paddle, dog leg, 3", seal, (replaces item 5)*	1

* See pages 128 & 131.

** Sanitary Acme thread, bevel seat fitting.