KYAMBOGO UNIVERSITY

Faculty of Engineering

Department of Mechatronics and Biomedical Engineering

Diploma in Biomedical Engineering

AUTOMATED FIRST AID KIT WITH INTERNAL UV-C STERILISATION

A Diploma Final Year Project Report

Presented by:

Ngabonzira Marvin Mmembe - 21/U/DBE/7344/PD

Nayiga Sylvia - 21/U/DBE/7266/PD

Lukwiya Godfrey Toolit - 21/U/DBE/4553/PD

Supervised by:

Dr. Kafeero Hussein

Academic Year 2022/2023

Licensing and Attribution

This work is licensed under the Creative Commons Attribution 4.0 International Licence (CC BY 4.0). You are free to share and adapt this material for any purpose, provided appropriate credit is given to the original authors.

Licence details: https://creativecommons.org/licenses/by/4.0/

This report was originally submitted in partial fulfilment of the requirements for the Diploma in Biomedical Engineering, Department of Mechatronics and Biomedical Engineering, Faculty of Engineering, Kyambogo University, Kampala, Uganda. It has subsequently been revised to correct technical errors in the calculation of UV-C intensity and exposure time, to standardise citations, and to more accurately characterise the scope and limitations of the prototype build. It is made publicly available to document the proof-of-concept work of the named authors.

Authors: Ngabonzira Marvin Mmembe, Nayiga Sylvia, Lukwiya Godfrey Toolit

Supervisor: Dr. Kafeero Hussein

Institution: Kyambogo University, Uganda

Original submission: July 2023

Revised and published: March 2026

Declaration

We, the undersigned, declare that the work presented in this report was conducted by us as a group project, and that the report was organised, written, and edited by the named authors. This is our original work and has not been submitted to any other institution or academic forum for assessment.

Ngabonzira Marvin Mmembe

Signature: ……

Nayiga Sylvia

Signature: ……

Lukwiya Godfrey Toolit

Signature: ……

Date: ……

Approval

I hereby certify the successful completion of this project under guided supervision.

Supervisor: Dr. Kafeero Hussein

Signature: ……

Date: ……

Dedication

To our families, who provided the encouragement, patience, and support to pursue this work. Your belief in us made this possible.

Acknowledgements

We wish to thank the Administration of Kyambogo University, and the Projects Coordinator, Ms. Babirye Susan, for providing us with the opportunity to undertake this project.

Our sincere gratitude goes to our supervisor, Dr. Kafeero Hussein, whose openness to our idea and consistent guidance were indispensable to the realisation of this work.

We also acknowledge the contributions of colleagues who offered assistance and encouragement during the project period, including Baguma Joel, Tyobo Harriet Yake, Econgu Emmanuel, and Kagolo Brian.

Finally, we are grateful to the open-source Arduino and Proteus communities whose documentation and forums supported us throughout the design and build process.

Abstract

This report documents the design, construction, and functional verification of an Automated First Aid Kit equipped with an internal ultraviolet germicidal (UV-C) sterilisation system. The project was undertaken as a diploma final year project in Biomedical Engineering at Kyambogo University, and represents the team's first substantial academic engineering project.

The proposed system integrates an 8W low-pressure mercury germicidal lamp operating at 254 nm, an ATmega328P microcontroller on an Arduino Nano board, an HC-SR04 ultrasonic proximity sensor for automated lid-closure detection, and a relay module for lamp switching. A 12V rechargeable lead-acid battery and a DC-to-AC inverter form the power supply.

UV-C dose calculations for the lamp's UV-C conversion efficiency (estimated at 35%), yielded a UV-C output of 2.8 W and an irradiance of approximately 1.35 mW/cm² over the kit's internal surface area of 2078 cm². A target dose of 40 mJ/cm², adopted from United States Environmental Protection Agency disinfection guidelines, translates to a calculated exposure time of approximately 30 seconds. An operational duration of 35 seconds was applied, corresponding to a delivered dose of approximately 47 mJ/cm².

The prototype successfully demonstrated automated lamp activation and deactivation in response to lid closure, stable LED status indication, and consistent timer operation. This work is presented as a proof of concept: quantitative measurement of UV-C irradiance and microbial reduction testing were outside the resource scope of this iteration and are identified as priorities for future work.

Keywords: UV-C, germicidal irradiation, first aid kit, sterilisation, Arduino, proof of concept, biomedical engineering.

Abbreviations and Acronyms

AC	Alternating Current
CDC	Centres for Disease Control and Prevention
DC	Direct Current
EPA	United States Environmental Protection Agency
FDA	Food and Drug Administration
IDE	Integrated Development Environment
LED	Light Emitting Diode
mJ	Millijoules
mW	Milliwatts
nm	Nanometres
UV	Ultraviolet
UV-C	Ultraviolet Light, Type C (wavelength 100–280 nm)
UVGI	Ultraviolet Germicidal Irradiation
W	Watts
WHO	World Health Organization

Chapter One: Introduction

This chapter establishes the context and rationale for the project, presenting the background, problem statement, justification, objectives, significance, and scope of work.

1.1 Background

First aid kits are an essential component of emergency preparedness, providing immediate care for minor injuries and illnesses before professional medical attention is available. A well-stocked kit can prevent complications, reduce infection risk, and stabilise a patient's condition in a wide range of settings, including homes, workplaces, vehicles, schools, and outdoor environments [3].

Despite their importance, traditional first aid kits are designed primarily around supply storage and not sterility maintenance. Over extended periods of storage, particularly in environments with variable temperature and humidity, dust particles and microbial organisms can accumulate on internal surfaces. If a kit has been opened, used, and improperly resealed, the risk of contamination increases further [1]. Contaminated dressings, instruments, or antiseptics used during an emergency can introduce or worsen infections, compromising patient safety in a context where it is most critical [2].

Ultraviolet germicidal irradiation (UVGI) has been employed in healthcare, water treatment, and laboratory environments for decades as an effective, chemical-free method of inactivating a broad spectrum of bacteria, viruses, and fungi [6]. UV-C light, with wavelengths between 100 and 280 nm, damages the DNA and RNA of microorganisms, preventing replication. At 254 nm, the peak germicidal wavelength emitted by low-pressure mercury lamps, this effect has been validated across numerous clinical and laboratory studies [6][8][9][10].

This project proposes and constructs a first aid kit that integrates an automated UV-C sterilisation cycle, triggered by lid closure. The goal is to provide a continuously disinfected internal environment without requiring any active intervention from the user.

1.2 Problem Statement

Traditional first aid kits lack any internal mechanism for maintaining the sterility of their contents during storage. Conventional sterilisation approaches, including steam autoclaving, dry heat, ethylene oxide gas, and chemical disinfectants require specialised facilities, trained personnel, and equipment that cannot be integrated into a portable, user-operated kit [4][12].

In emergency contexts, particularly in resource-limited or field environments, the absence of a viable in-situ sterilisation mechanism creates a real risk that the first aid supplies being applied to an injured person are themselves a source of microbial contamination. This is an underappreciated gap in conventional first aid kit design that warrants an engineering solution.

1.3 Justification

This project is justified by the following considerations:

- Infection prevention: A 254 nm UV-C germicidal lamp provides automated, continuous sterilisation of the kit's internal environment, reducing contamination risk during storage [6][11].
- User safety: The use of an ultrasonic sensor to confirm lid closure before lamp activation ensures that UV-C radiation cannot directly expose the user during operation.
- Accessibility: Low-pressure mercury germicidal lamps and Arduino microcontrollers are commercially available at relatively low cost, making this design replicable in resource-limited settings [6].
- Chemical-free operation: Unlike disinfectants and sterilising gases, UV-C leaves no toxic residues on kit contents [6][7].
- Automation: Microcontroller-driven control removes the requirement for user-initiated sterilisation cycles, improving reliability.

1.4 Objectives

Main Objective

To design and construct an automated first aid kit that sterilises its internal contents using UV-C germicidal irradiation.

Specific Objectives

- To conduct a literature review on the effectiveness of UV-C light technology for sterilising medical equipment and surfaces.
- To design and simulate the electronic circuitry of the first aid kit using appropriate software tools.
- To construct a functional prototype by assembling the electronic components and UV-C lamp within a suitable enclosure.
- To conduct a functional verification of the assembled prototype, confirming that each subsystem operates as designed within the constraints of a proof-of-concept build.

1.5 Significance

The significance of this project lies in demonstrating that UV-C sterilisation technology can be practically integrated into a compact, autonomous first aid kit using widely available, low-cost components. Beyond its immediate application, this project contributes to the development of engineering competency at the undergraduate level, showing that meaningful biomedical device concepts can be prototyped within the resource constraints of a diploma programme.

1.6 Scope

Functional Scope

The project encompasses the design, simulation, construction, and functional verification of an automated first aid kit. The system activates a 35-second UV-C sterilisation cycle upon lid closure, controlled by an ATmega328P microcontroller. An LED indicator signals cycle status to the user.

Design Scope

This is a proof-of-concept build. Quantitative measurement of UV-C irradiance and controlled microbial reduction testing were not performed in this iteration due to the absence of calibrated measurement instruments and microbiological laboratory facilities. These are identified as priority activities for future work.

Time Scope

The project was completed within approximately three months during the 2022/2023 academic year.

Chapter Two: Literature Review

This chapter reviews the existing body of knowledge on first aid kit design, sterilisation science, UV-C germicidal technology, and automation in medical applications. The review provides the theoretical foundation for the design choices made in this project.

2.1 First Aid Kits: Purpose and Current Limitations

A first aid kit is a collection of supplies and equipment for basic emergency medical care. According to the Mayo Clinic, a standard kit should include bandages, gauze, adhesive tape, scissors, tweezers, antiseptic solution, antibiotic ointment, pain relievers, and a first aid manual [3]. The CDC recommends supplementing this with nitrile gloves, a thermometer, and instruction cards as baseline components for home or travel kits [2].

The fundamental design of first aid kits has not changed significantly over many decades. They prioritise affordability, compactness, and supply accessibility, but do not incorporate any mechanism for maintaining the sterility of their contents during storage. Once a kit has been opened, used, or exposed to environmental fluctuations in temperature and humidity, microbial colonisation of internal surfaces is possible [1]. In field and emergency settings where kits may go unused for extended periods, this is a practical safety concern that existing designs do not address.

2.2 Sterilisation Methods for Medical Equipment

Sterilisation refers to the complete elimination of all viable microorganisms, including spores, from surfaces and materials. Several methods are used in healthcare settings, each with distinct characteristics [4][12].

Moist Heat (Steam Autoclaving)

Autoclaving with saturated steam at 121–134°C under elevated pressure is the most widely validated sterilisation method for heat-stable materials. It is highly reliable but requires fixed autoclave infrastructure, regular calibration, and trained operators, making it entirely unsuitable for portable applications [4][12].

Dry Heat

Dry heat sterilisation at 160–180°C is appropriate for heat-resistant glassware and metal instruments that cannot tolerate moisture. It is slower and more energy-intensive than autoclaving, and is similarly incompatible with portable field applications [4].

Ionising Radiation

Gamma radiation and electron beam processing are used commercially to sterilise pre-packaged medical devices. They require industrial-scale infrastructure and are not applicable to in-situ sterilisation of a portable kit [4].

Ethylene Oxide Gas

Ethylene oxide (EtO) effectively sterilises heat-sensitive materials including plastics and electronic components, but is toxic, carcinogenic, and subject to extensive regulatory controls on use and disposal [4][12].

Vaporised Hydrogen Peroxide

Vaporised hydrogen peroxide (VHP) achieves rapid broad-spectrum sterilisation with minimal residue. Rutala et al. (2010) demonstrated greater than 99.9% reduction in multidrug-resistant organisms on hard surfaces in hospital rooms. However, VHP systems are expensive and not portable [10].

Chemical Disinfectants

Agents such as peracetic acid, chlorine dioxide, and alcohols are widely used for surface decontamination. They are accessible, but can leave residues, degrade materials over time, and require careful handling [12].

2.3 Why Conventional Methods Are Unsuitable for This Application

All of the methods described above share a fundamental incompatibility with portable, autonomous operation. The specific constraints are:

- All require specialised equipment or infrastructure that cannot be embedded in a compact enclosure [4].
- Several leave residues that could contaminate the medical supplies themselves [12].

- All require trained operator oversight for safe execution and validation [4].
- The associated costs and regulatory requirements are prohibitive for a low-cost, field-use device.

These constraints collectively define the design space that UV-C irradiation is well placed to address.

2.4 UV-C Germicidal Irradiation

Germicidal Mechanism

Ultraviolet light is categorised by wavelength into UV-A (315–400 nm), UV-B (280–315 nm), and UV-C (100–280 nm). UV-C radiation, particularly in the range of 250–270 nm, is strongly absorbed by nucleic acids. Absorption causes the formation of thymine dimers and other photoproducts that disrupt DNA replication, rendering the organism non-viable [6][11]. This mechanism is non-chemical, produces no residues, and is effective across bacteria, viruses, and fungi.

Low-pressure mercury germicidal lamps emit predominantly at 254 nm, which is close to the absorption maximum of nucleic acids (~260 nm), making them highly efficient for germicidal applications [6][7]. This lamp type has been in clinical and commercial use since the mid-twentieth century and has an extensive evidence base supporting its effectiveness.

Evidence of Effectiveness

Several peer-reviewed studies are directly relevant to the proposed application:

- Kowalski et al. (2009) found that UV-C irradiation at a dose of 1 J/cm² achieved a 99.9% reduction in viable influenza virus (H1N1) on N95 respirators, demonstrating effectiveness on personal protective equipment surfaces [8].
- Nerandzic et al. (2010) reported that UV-C at 22 mJ/cm² achieved a 99.9% reduction of Clostridium difficile spores on hard hospital surfaces and a 94.6% reduction on soft surfaces [9]. The C. difficile spore, known for its high resistance to chemical disinfectants, represents a meaningful benchmark for UV-C efficacy.

- Rutala et al. (2010) compared UV-C and VHP for patient room decontamination and found both achieved greater than 99.9% reduction of multidrug-resistant organisms on hard surfaces, with UV-C being faster, less costly, and simpler to operate [10].

Raeiszadeh and Adeli (2020) further reviewed UV-C disinfection systems in the context of the COVID-19 pandemic, confirming the technology's efficacy against SARS-CoV-2 and underlining the importance of dose accuracy and user safety controls in UV-C system design [11].

Dose Standardisation

UV-C effectiveness is governed by dose, defined as the product of irradiance (mW/cm²) and exposure time (seconds), expressed in mJ/cm². Required doses vary by organism, with vegetative bacteria requiring doses as low as 10–20 mJ/cm² and more resistant organisms such as bacterial spores requiring several hundred mJ/cm² [6].

For general environmental disinfection applications, a dose of 40 mJ/cm² is a widely cited reference threshold. The United States Environmental Protection Agency (EPA) adopted this value as the minimum required UV dose for drinking water disinfection, at which level at least a 3-log (99.9%) inactivation of Cryptosporidium and Giardia, two of the most UV-resistant waterborne pathogens is reliably achieved [5]. This threshold is used as the design target for the present project.

Advantages for This Application

UV-C germicidal irradiation offers several properties that make it well suited for integration into a portable, automated first aid kit:

- No consumable chemicals and no toxic residues following irradiation.
- Broad-spectrum effectiveness against bacteria, viruses, and fungi.
- Compact, affordable, and widely available lamp components.
- Fully automatable via microcontroller logic.
- No elevated temperature or pressure requirements that could damage kit contents.

2.5 Limitations and Challenges of UV-C Irradiation

The limitations of UV-C irradiation must be understood and accounted for in system design:

- Line-of-sight dependence: UV-C cannot penetrate opaque packaging or reach shadowed surfaces. Items beneath other items, or enclosed in wrappers, may receive inadequate doses [6].
- Material degradation: Repeated UV-C exposure can cause yellowing and embrittlement of polymers and rubber, which are common in medical supply materials [6].
- Health hazards: Skin and eye exposure to UV-C causes burns and photokeratitis, respectively, within seconds. System designs must ensure the lamp cannot activate when the kit is open [11].
- Irradiance uniformity: UV-C intensity decreases with the square of distance from the lamp. Achieving a consistent dose throughout an enclosure requires attention to lamp placement and the reflectivity of internal surfaces [6][7].

These limitations informed several design decisions described in Chapter Three, including the lid-interlock safety feature and the choice of operational exposure duration.

2.6 Automation in Medical Device Applications

The automation of medical procedures and device functions reduces dependence on user vigilance, which is particularly valuable in emergency situations where cognitive load may be high [1]. In the context of a first aid kit, automation ensures the sterilisation cycle occurs reliably after every use without requiring the user to remember, initiate, or monitor a manual disinfection step.

The Arduino platform, based on the ATmega family of AVR microcontrollers, has become a widely used tool for rapid prototyping of automated sensing and control systems in biomedical and research engineering contexts. Its open-source ecosystem, extensive community documentation, and low component cost make it appropriate for proof-of-concept development at the undergraduate level.

2.7 Conclusion

The literature provides a strong scientific foundation for the use of UV-C germicidal irradiation as a practical, chemical-free sterilisation mechanism for first aid kit contents. The key design parameters for this project, 254 nm wavelength, a target dose of 40 mJ/cm^2, and low-pressure mercury lamp technology are grounded in peer-reviewed evidence and established disinfection standards. The limitations of UV-C, particularly line-of-sight dependence, material effects, and user safety requirements, were recognised and factored into the design decisions described in the following chapter.

Chapter Three: Methodology

This chapter describes the approaches taken to achieve each specific objective: the literature review process, the power supply design, UV-C dose and exposure time calculations, electronic circuit design and simulation, microcontroller programming, and prototype construction. A corrected UV-C intensity calculation is presented here, along with a clear justification for the chosen sterilisation duration.

The table below summarises the specific objectives and the approach used to achieve each one.

Specific Objective	Approach
Objective 1 Literature Review	• Systematic search of academic databases (Google Scholar, PubMed, ResearchGate) • Review of WHO, EPA, FDA, and CDC guidance documents • Synthesis of findings to inform design parameters
Objective 2 Circuit Design	• Design of block diagram for circuit architecture • UV-C dose and exposure time calculation • Circuit simulation using Proteus 8 Professional • Arduino control code development and testing
Objective 3 Prototype Construction	• Breadboard assembly for initial verification • Soldering components onto circuit board • Integration of electronics within the kit enclosure
Objective 4 Functional Verification	• Subsystem testing: sensor, relay, LED, timer • Full system integration testing over multiple cycles • Documentation of observations and deviations

3.1 Objective One: Literature Review

The literature review was conducted through systematic searching of Google Scholar, PubMed, and ResearchGate, supplemented by reference lists in key retrieved sources. Authoritative guidance documents from the WHO, EPA, FDA, and CDC were also consulted directly. Search terms included ‘UV-C sterilisation’, ‘germicidal irradiation’, ‘ultraviolet disinfection dose’, ‘first aid kit contamination’, and ‘automated medical devices’.

3.2 Objective Two: Electronic Circuit Design

3.2.1 Power Supply

The system is powered by a 12 V rechargeable lead-acid battery. This supply serves two parallel paths:

- The Arduino Nano board is powered via its $V^{I}n$ pin and GND pins. The board’s onboard linear regulator steps the 12 V down to 5 V, which powers the ATmega328P microcontroller, the relay module, the ultrasonic sensor, and the LED indicator.
- The battery also feeds a DC-to-AC power inverter, which steps the 12 V DC up to 220 V AC. This is required because the 8W low-pressure mercury germicidal lamp is rated for 220 V AC operation and cannot run directly from the battery supply.

Figure 1: 12 V rechargeable lead-acid battery used as the primary power source

Figure 2: DC-to-AC inverter used to convert 12 V DC battery output to 220 V AC for the germicidal lamp

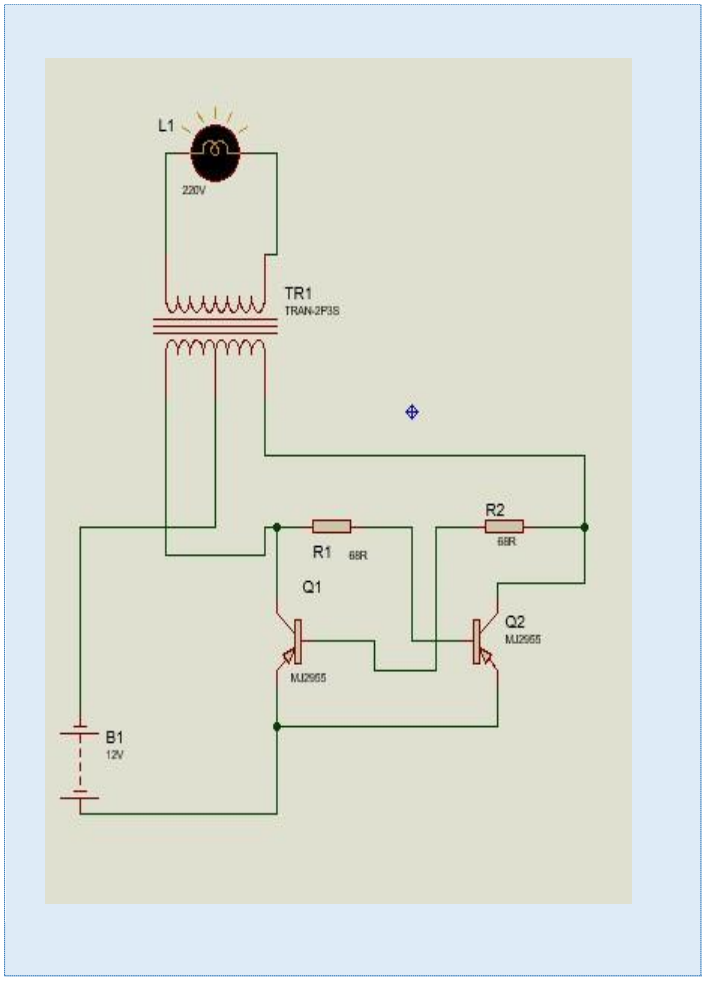

Figure 3: Proteus 8 Professional simulation of the DC-to-AC inverter circuit

3.2.2 UV-C Dose and Exposure Time Calculation

The following is a corrected calculation of the UV-C irradiance and required sterilisation duration for the prototype. An earlier version of this calculation incorrectly used the lamp's electrical input power (8 W) as the UV-C output. This section presents the corrected version, incorporating the UV-C conversion efficiency of the lamp.

Step 1: Actual UV-C Radiant Output

Low-pressure mercury germicidal lamps convert a fraction of their electrical input power into UV-C radiation at 254 nm. For standard commercial lamps of this type, the UV-C conversion efficiency is typically 25–40%, with 35% being a commonly cited representative midpoint for lamps of this wattage [6][7].

$$\text{UV-C radiant output} = \text{Electrical input power} \times \text{UV-C conversion efficiency}$$

$$= 8\ \text{W} \times 0.35$$

$$= 2.8\ \text{W} = 2800\ \text{mW}$$

Step 2: Internal Surface Area of the Kit Enclosure

The internal dimensions of the wooden kit enclosure were measured as approximately 330 mm × 230 mm × 50 mm (length × width × height). The total internal surface area to be irradiated was calculated as:

$$\text{Area} = 2(L \times W) + 2(L \times H) + 2(W \times H)$$

$$= 2(330 \times 230) + 2(330 \times 50) + 2(230 \times 50)$$

$$= 151{,}800 + 33{,}000 + 23{,}000\ \text{mm}^2$$

$$= 207{,}800\ \text{mm}^2 = 2078\ \text{cm}^2$$

Step 3: UV-C Irradiance

Assuming uniform distribution of UV-C irradiance across the internal surface area (a reasonable simplification for a proof-of-concept analysis):

```
UV-C Irradiance  =  UV-C output (mW) ÷ Area (cm²)
                 =  2800 ÷ 2078
                 =  1.348 mW/cm²
```

Step 4: Required Exposure Time

The target UV-C dose of 40 mJ/cm² is the EPA's minimum disinfection standard for drinking water treatment, corresponding to at least 3-log (99.9%) inactivation of the most resistant waterborne pathogens [5]. For general environmental sterilisation of a first aid kit interior, this is a conservative and defensible threshold.

```
Exposure time  =  Target dose (mJ/cm²) ÷ UV-C irradiance
(mW/cm²)
               =  40 ÷ 1.348
               =  29.7 seconds  ≈  30 seconds
```

Rounding up to account for three real-world efficiency losses not captured in the simplified model, lamp output degradation over its service life, reflectivity losses from the wooden enclosure surface (which absorbs rather than reflects UV-C), and the non-uniformity of actual irradiance distribution, the operational sterilisation duration was set at 35 seconds.

At 35 seconds, the delivered dose is:

```
Delivered dose  =  1.348 mW/cm² × 35 s  =  47.2 mJ/cm²
```

This exceeds the 40 mJ/cm² threshold by approximately 18%, providing a meaningful safety margin while remaining within a practically short cycle time.

Note on demonstration timing: During the project's public presentation, the microcontroller was programmed with a sterilisation duration of 15 seconds to compress the visible demonstration cycle. This duration delivers approximately 20.2 mJ/cm², which falls below the 40 mJ/cm² target and was used solely for the purposes of demonstration. The 35-second value presented above should be used for any operational deployment.

3.2.3 Block Diagram

The overall circuit architecture is illustrated in the block diagram below. The 12 V battery supplies power to the Arduino microcontroller directly and to the inverter. The inverter provides 220 V AC to the germicidal lamp via the relay. The ultrasonic sensor provides distance readings to the microcontroller, which controls the relay module and LED indicator.

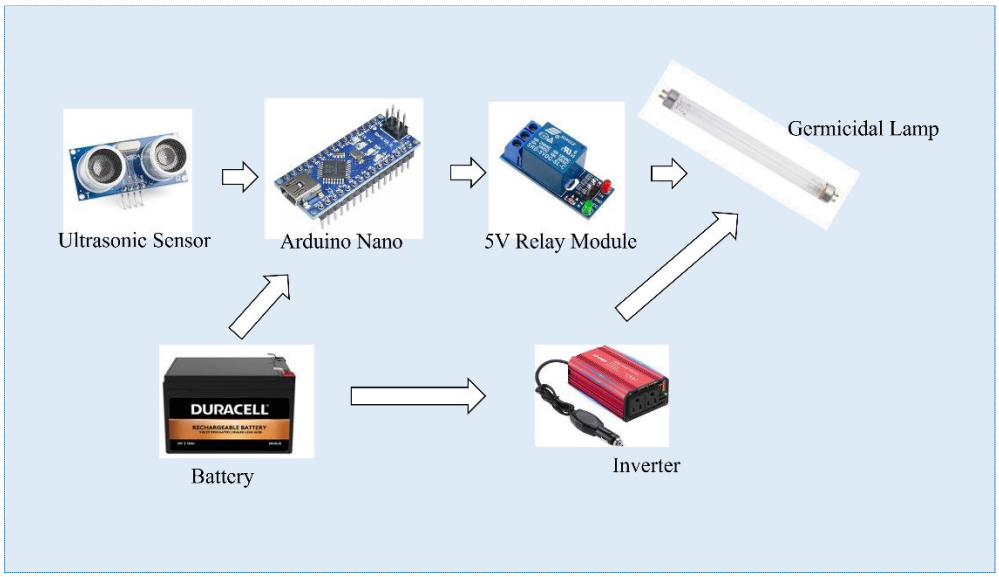

Figure 4: Block diagram of the complete circuit system

3.2.4 Circuit Diagram

The full circuit was designed and simulated in Proteus 8 Professional. The schematic shows the HC-SR04 ultrasonic sensor connected to digital pins D2 (TRIG) and D4 (ECHO) of the Arduino Nano. The relay module is connected to digital output pins D6 and D12. The LED indicator is connected via a 150 Ω current-limiting resistor to pin D10. The germicidal lamp is connected to the relay's normally-open output, receiving 220 V AC from the inverter only when the relay is activated.

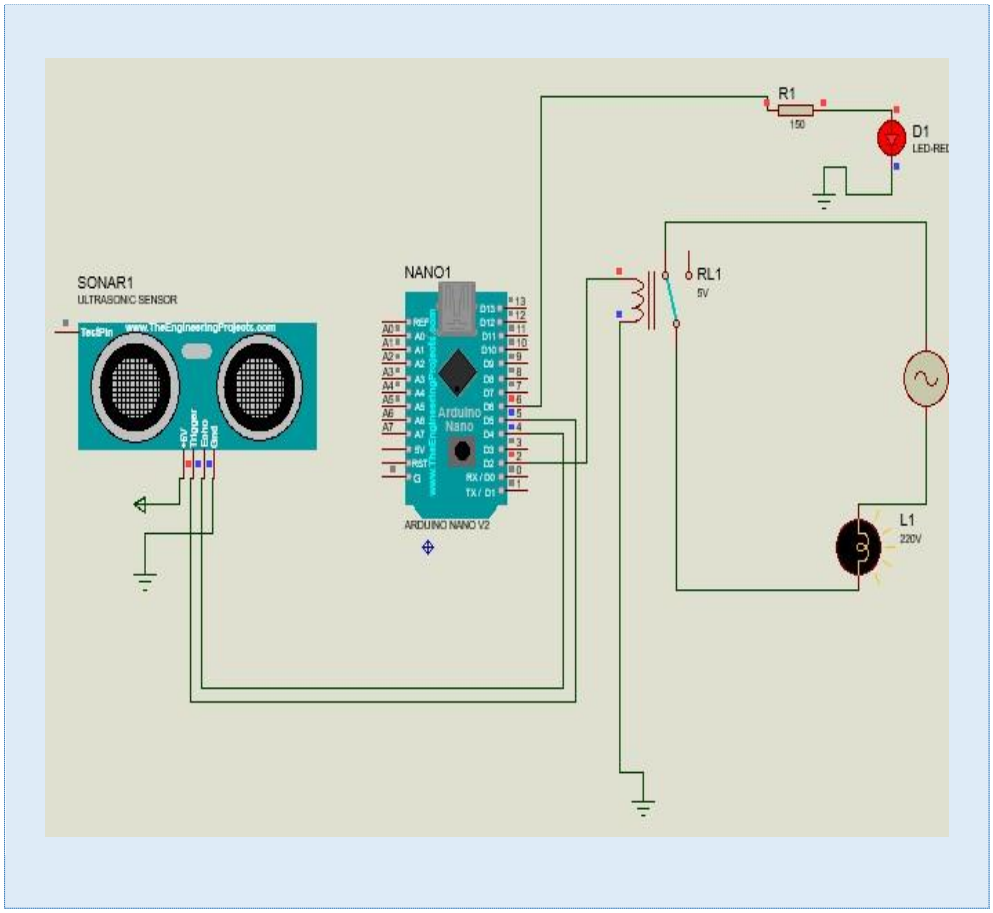

Figure 5: Full circuit schematic for the automated first aid kit system

3.2.5 Design Deviation: Sensor Selection

The original project proposal specified a magnetic reed switch as the lid-closure detection mechanism. During the construction phase, a magnetic reed switch suitable for the intended circuit configuration was not available for purchase locally at the time of procurement. An HC-SR04 ultrasonic proximity sensor was used as a substitute.

This change introduced an additional benefit: unlike a reed switch, the ultrasonic sensor provides a programmable distance threshold, allowing the system to detect ‘closed’ based on measured distance rather than requiring physical contact between a magnet on the lid and a fixed sensor position. This makes the design more tolerant of variation in lid materials and dimensions.

3.3 Objective Three: Microcontroller Programming

The ATmega328P, programmed via the Arduino IDE, implements the following control logic:

1. The ultrasonic sensor is triggered every 500 ms. A 10-µs HIGH pulse on the TRIG pin initiates a burst, and the duration of the echo pulse on the ECHO pin is measured.
2. Distance is calculated from the echo duration using the speed of sound (0.034 cm/µs), divided by two to account for the return path.
3. If the measured distance is at or below 12 cm, the system infers that the lid is closed.
4. On detecting lid closure for the first time within a cycle (transition from open to closed state), the system records the current timestamp and activates the relay module, switching the germicidal lamp and LED indicator on.
5. The system monitors elapsed time. After 35 seconds, the relay is deactivated, turning off the lamp and LED. The system then waits for the lid to open before it can start a new cycle.
6. If the lid is opened during the sterilisation cycle, the system resets immediately.

The complete source code is presented below. Comments have been added for clarity.

```
// ── AutoKit_Sterilization_Controller.ino ──────────────────────────
// Automated First Aid Kit | Sterilisation Control System
// ATmega328P (Arduino Nano) | Kyambogo University, 2023
// ──────────────────────────────────────────────────────────────────


// ── Pin definitions ──────────────────────────────
const int trigPin    = 2;     // Ultrasonic sensor: TRIG output
const int echoPin    = 4;     // Ultrasonic sensor: ECHO input
const int relayPin1  = 6;     // Relay module: control channel 1
const int relayPin2  = 12;    // Relay module: control channel 2
const int ledPin     = 10;    // Status LED indicator
```

```
// ── System configuration ──────────────────────────
const int           maxDistance = 12;      // Lid-closed threshold (cm)
const unsigned long onDuration  = 35000;   // Sterilisation cycle (ms) = 35 s
//
// NOTE: During the public presentation, onDuration was set to 15000 ms
// (15 seconds) to shorten the visible demonstration cycle. The value
// above (35000 ms) reflects the corrected operational duration based
// on the UV-C dose calculation in Chapter Three.

// ── State variables ───────────────────────────────
unsigned long previousTime   = 0;
bool          obstacleDetected = false;

// ── setup() ──────────────────────────────────────────────────
void setup() {
    pinMode(trigPin,    OUTPUT);
    pinMode(echoPin,    INPUT);
    pinMode(relayPin1,  OUTPUT);
    pinMode(relayPin2,  OUTPUT);
    pinMode(ledPin,     OUTPUT);

    // Initial state: relay inactive (HIGH = off for active-low relay)
    digitalWrite(relayPin1, HIGH);
    digitalWrite(relayPin2, HIGH);
    digitalWrite(ledPin,    LOW);
}

// ── loop() ───────────────────────────────────────────────────
void loop() {

    // ── Emit ultrasonic pulse ──
    digitalWrite(trigPin, LOW);
    delayMicroseconds(2);
    digitalWrite(trigPin, HIGH);
    delayMicroseconds(10);
    digitalWrite(trigPin, LOW);

    // ── Measure echo and calculate distance ──
    long  duration = pulseIn(echoPin, HIGH);
    float distance = duration * 0.034 / 2;   // Speed of sound, result in cm

    unsigned long currentTime = millis();
```

```
    // ── Evaluate lid state ──
    if (distance <= maxDistance) {           // Lid is closed
        if (!obstacleDetected) {
            obstacleDetected = true;
            previousTime     = currentTime;  // Start sterilisation timer
        }
        if (currentTime - previousTime <= onDuration) {
            // Sterilisation cycle in progress
            digitalWrite(relayPin1, LOW);    // Lamp ON
            digitalWrite(relayPin2, LOW);
            digitalWrite(ledPin,    HIGH);   // LED ON
        } else {
            // Cycle complete
            digitalWrite(relayPin1, HIGH);   // Lamp OFF
            digitalWrite(relayPin2, HIGH);
            digitalWrite(ledPin,    LOW);    // LED OFF
        }
    } else {                                 // Lid is open — reset
        obstacleDetected = false;
        digitalWrite(relayPin1, HIGH);
        digitalWrite(relayPin2, HIGH);
        digitalWrite(ledPin,    LOW);
    }

    delay(500);                              // Sampling interval (ms)
}
```

3.4 Objective Four: Prototype Construction

Physical construction proceeded in three stages.

Breadboard Prototyping

All components were first assembled on a breadboard to verify electrical connections and confirm control code behaviour before permanent assembly. This stage enabled identification and correction of wiring errors and confirmed that the sensor, relay, and LED functions responded correctly to the code logic.

Soldering and Circuit Board Assembly

Once the breadboard circuit was verified, components were transferred to a circuit board and soldered. The relay module, Arduino Nano board, and ultrasonic sensor were each mounted and connected with insulated wiring.

Enclosure Integration

The electronic components were integrated into a wooden box enclosure serving as the first aid kit container. The germicidal lamp was mounted centrally within the interior. The ultrasonic sensor was fixed to the underside of the lid, oriented to face the kit's interior surface. The 12 V battery and inverter were housed in the lower section of the enclosure.

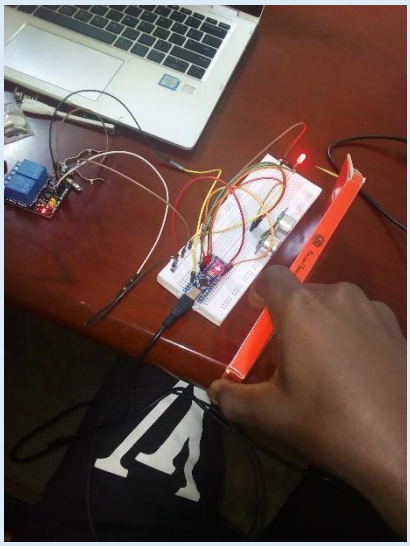

Figure 6: Breadboard prototyping phase: initial circuit assembly and software testing

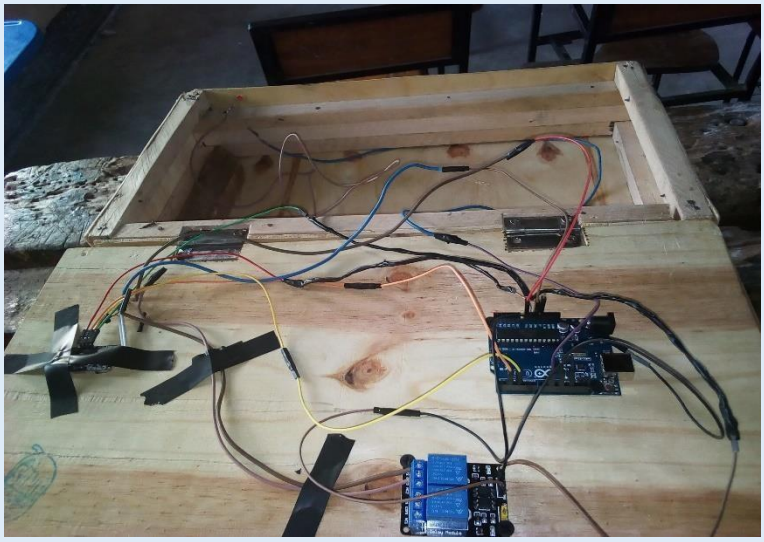

Figure 7: Internal view of the kit enclosure showing component layout and wiring

Figure 8: Germicidal lamp activated within the assembled prototype during a test cycle

Chapter Four: System Verification

This chapter presents the results of functional verification performed on the assembled prototype. It is important to frame the scope of this verification clearly: the prototype was built and tested as a proof of concept. No quantitative UV-C irradiance measurements were taken with a calibrated radiometer, and no controlled microbial reduction experiments were conducted. The verification activities described here confirm that each electronic subsystem functioned as designed. Claims about germicidal effectiveness are based on the calculated dose and the literature reviewed in Chapter Two, not on direct experimental measurement.

4.1 Verification Scope

The following subsystems were tested:

- Ultrasonic proximity sensor: lid-closure detection
- Relay module: lamp switching (activation and deactivation)
- LED indicator: status signalling
- Microcontroller timer: sterilisation cycle duration
- Power supply: stability under load
- Germicidal lamp: activation and visible UV output

4.2 Observations

Ultrasonic Sensor Detection

The HC-SR04 sensor reliably detected lid closure across multiple test cycles. With the distance threshold set at 12 cm, the system consistently distinguished between the open and closed states. No false-positive triggers were observed during repeated testing.

Relay Switching

The relay module responded correctly to microcontroller output signals, audibly switching the germicidal lamp circuit on and off at the correct times. The active-low

relay logic was correctly implemented in the code (HIGH = relay off; LOW = relay on), consistent with the relay module's specifications.

LED Indicator

The LED activated in synchrony with the relay at the start of each sterilisation cycle and extinguished at cycle completion, providing clear visual feedback of system state.

Timer Operation

The millis()-based timer operated consistently across multiple cycles, terminating the sterilisation cycle at the programmed duration without measurable drift. During the public presentation, this was set to 15 seconds; for the operational design, it is set to 35 seconds.

Power Supply

The 12 V battery and inverter provided stable power throughout testing. No voltage irregularities were observed during lamp activation, which represents the highest instantaneous current draw in the system.

Germicidal Lamp

The germicidal lamp activated and deactivated in response to relay switching. Visible UV emission from the lamp was confirmed. The characteristic 254 nm UV-C output was not directly measured but is expected from the lamp's specification as a standard low-pressure mercury germicidal lamp.

4.3 Acknowledged Limitations and Deviations

The following limitations and deviations from the original proposal are openly acknowledged:

- The magnetic reed switch specified in the original proposal was replaced with an HC-SR04 ultrasonic sensor due to local procurement unavailability at the time of construction.
- No calibrated UV-C irradiance measurements were taken. The irradiance and dose values reported in Chapter Three are calculated estimates derived from published lamp efficiency data, not empirically measured values.

- No microbial reduction testing was performed. The germicidal effectiveness of the system has not been validated by experiment in this iteration.
- The 15-second sterilisation duration used during the public presentation was below the engineering design value of 35 seconds and would not deliver the target 40 mJ/cm² dose.
- The assumption of uniform irradiance across the entire internal surface area is a simplification. In practice, surfaces at greater distance from the lamp, or in geometrical shadow, would receive a lower dose than the average calculated value.
- The wooden enclosure has a low UV-C reflectivity. Commercial UVGI chambers use polished stainless steel or UV-reflective coatings to increase dose uniformity; the wooden surface absorbs a proportion of the UV-C output.

4.4 Discussion

The prototype demonstrated the central design concept: a microcontroller-driven, battery-powered UV-C sterilisation cycle, triggered automatically by lid closure. All electronic subsystems functioned as designed. The system was stable and repeatable across multiple test cycles.

The primary gap between this proof-of-concept prototype and a deployable product is the absence of empirical germicidal validation. Future iterations must include measurement of actual UV-C irradiance using a calibrated radiometer, followed by controlled microbial challenge testing using standard reference organisms. This would determine whether the delivered dose matches the calculated estimate and whether the dose is sufficient to achieve the targeted level of microbial inactivation across a representative range of kit contents.

The wooden enclosure is a known limitation for UV-C performance. Replacing it with a UV-reflective interior lining would improve dose uniformity and is a practical enhancement for a second-generation prototype.

Chapter Five: Conclusion and Recommendations

5.1 Conclusion

This project set out to design and construct an automated first aid kit that maintains the sterility of its internal contents using UV-C germicidal irradiation. The prototype, developed by a team of three diploma students undertaking their first major engineering project, achieved its central aim: demonstrating that a portable, battery-powered, microcontroller-driven UV-C sterilisation system can be built from commercially available components and integrated into a first aid kit enclosure.

The literature review established a sound scientific basis for UV-C germicidal technology at 254 nm, identifying a target dose of 40 mJ/cm² from EPA disinfection standards and supporting this with clinical evidence from peer-reviewed studies [5][8][9][10]. The corrected engineering calculation, incorporating a lamp UV-C conversion efficiency of 35%, yielded a designed sterilisation duration of 35 seconds, corresponding to a calculated delivered dose of approximately 47 mJ/cm².

The electronic circuit was designed, simulated in Proteus 8, and successfully built. The Arduino-based control code managed lid-closure detection, lamp switching, LED indication, and cycle timing reliably across repeated tests. All four specific objectives were achieved within the constraints of a proof-of-concept build, and the limitations of the prototype are openly acknowledged.

As a first engineering project, this work reflects the growth of its authors through a complete design-build cycle. The challenges encountered, component procurement constraints, calculation errors identified in review, the absence of laboratory facilities for efficacy testing, are not failures but are part of the honest record of what undergraduate-level engineering work looks like in a resource-limited context. They are documented here so that future teams can build on this foundation rather than repeat the same learning curve.

5.2 Recommendations

UV-C LED Technology

Future iterations should investigate UV-C light-emitting diodes (LEDs) as a replacement for the mercury germicidal lamp. UV-C LEDs operate at lower voltages (eliminating the need for an inverter), have a longer rated lifetime, contain no mercury, and can be manufactured in compact arrays for more uniform irradiance distribution. Their cost per milliwatt of UV-C output is currently higher than mercury lamps but is falling rapidly.

Enclosure Material and Reflectivity

The wooden enclosure used in this prototype absorbs UV-C radiation, reducing dose uniformity and efficiency. Future designs should incorporate enclosures with UV-reflective interior surfaces, polished aluminium sheet or UV-reflective polymer coatings to improve the effective dose delivered to all surfaces and contents within the kit.

Quantitative Efficacy Testing

The most critical next step is experimental validation of the system's germicidal performance. This should include: (1) measurement of actual UV-C irradiance at multiple positions within the enclosure using a calibrated UV-C radiometer; (2) controlled challenge testing using standard ATCC reference strains representative of organisms likely to be encountered in a field setting; and (3) comparison of measured dose against the calculated estimate to validate the efficiency assumptions made in this report.

Power System Simplification

The current design requires an inverter to supply 220 V AC to the germicidal lamp, adding weight, cost, and electrical complexity. A transition to UV-C LEDs would allow operation directly from the 12 V or 5 V battery supply, significantly simplifying the power architecture.

Hardware Safety Interlock

The current design relies entirely on the software-based ultrasonic sensor check to prevent lamp activation when the lid is open. A hardware-level redundant safety

interlock such as a normally-open limit switch in series with the lamp circuit, physically closed only when the lid is shut would provide a critical fail-safe layer independent of the microcontroller software.

User Interface

Adding a small OLED or LCD display would allow the system to communicate cycle status, battery level, time remaining, and error states to the user. This would improve usability, particularly in field conditions where the LED indicator alone may be insufficient.

Regulatory Considerations

Any version of this system intended for clinical use or commercial distribution would need to meet applicable medical device regulatory requirements. In Uganda, this would involve the National Drug Authority (NDA). International deployment would require alignment with relevant ISO standards governing sterilisation processes and UV-C device safety.

References

[1] World Health Organization. (2014). Decontamination and reprocessing of medical devices for health-care facilities. WHO Press. https://apps.who.int/iris/handle/10665/112587

[2] Centers for Disease Control and Prevention. (2021, May 4). Must-haves for your first-aid kit. CDC Public Health Matters Blog. https://blogs.cdc.gov/publichealthmatters/2021/05/first-aid-kits/

[3] Mayo Clinic Staff. (2017). First-aid kits: Stock supplies that can save lives. Mayo Clinic. https://www.mayoclinic.org/first-aid/first-aid-kits/basics/art-20056673

[4] U.S. Food and Drug Administration. (2022). Sterilization for medical devices. FDA. https://www.fda.gov/medical-devices/general-hospital-devices-and-supplies/sterilization-medical-devices

[5] U.S. Environmental Protection Agency. (2006). Ultraviolet disinfection guidance manual for the final long term 2 enhanced surface water treatment rule (EPA 815-R-06-007). EPA Office of Water. https://www.epa.gov/sites/default/files/2019-08/documents/uv-disinfection-guidance-manual.pdf

[6] Kowalski, W. J. (2009). Ultraviolet germicidal irradiation handbook: UVGI for air and surface disinfection. Springer.

[7] Bolton, J. R., & Cotton, C. A. (2008). The ultraviolet disinfection handbook. American Water Works Association.

[8] Kowalski, W., Walsh, T., & Petraitis, V. (2009). 2009 H1N1 influenza virus inactivation by ultraviolet germicidal irradiation for reuse of N95 respirators. ResearchGate. https://doi.org/10.13140/2.1.3935.0402

[9] Nerandzic, M. M., Cadnum, J. L., Pultz, M. J., & Donskey, C. J. (2010). Evaluation of an automated ultraviolet radiation device for decontamination of Clostridium difficile and other healthcare-associated pathogens in hospital rooms. BMC Infectious Diseases, 10, Article 197. https://doi.org/10.1186/1471-2334-10-197

[10] Rutala, W. A., Gergen, M. F., & Weber, D. J. (2010). Room decontamination with UV radiation. Infection Control and Hospital Epidemiology, 31(10), 1025–1029. https://doi.org/10.1086/656244

[11] Raeiszadeh, M., & Adeli, B. (2020). A critical review on ultraviolet disinfection systems against COVID-19 outbreak: Applicability, validation, and safety considerations. ACS Photonics, 7(11), 2941–2951. https://doi.org/10.1021/acsphotonics.0c01245

[12] Centers for Disease Control and Prevention. (2019). Guideline for disinfection and sterilization in healthcare facilities. CDC. https://www.cdc.gov/infectioncontrol/guidelines/disinfection/sterilization/