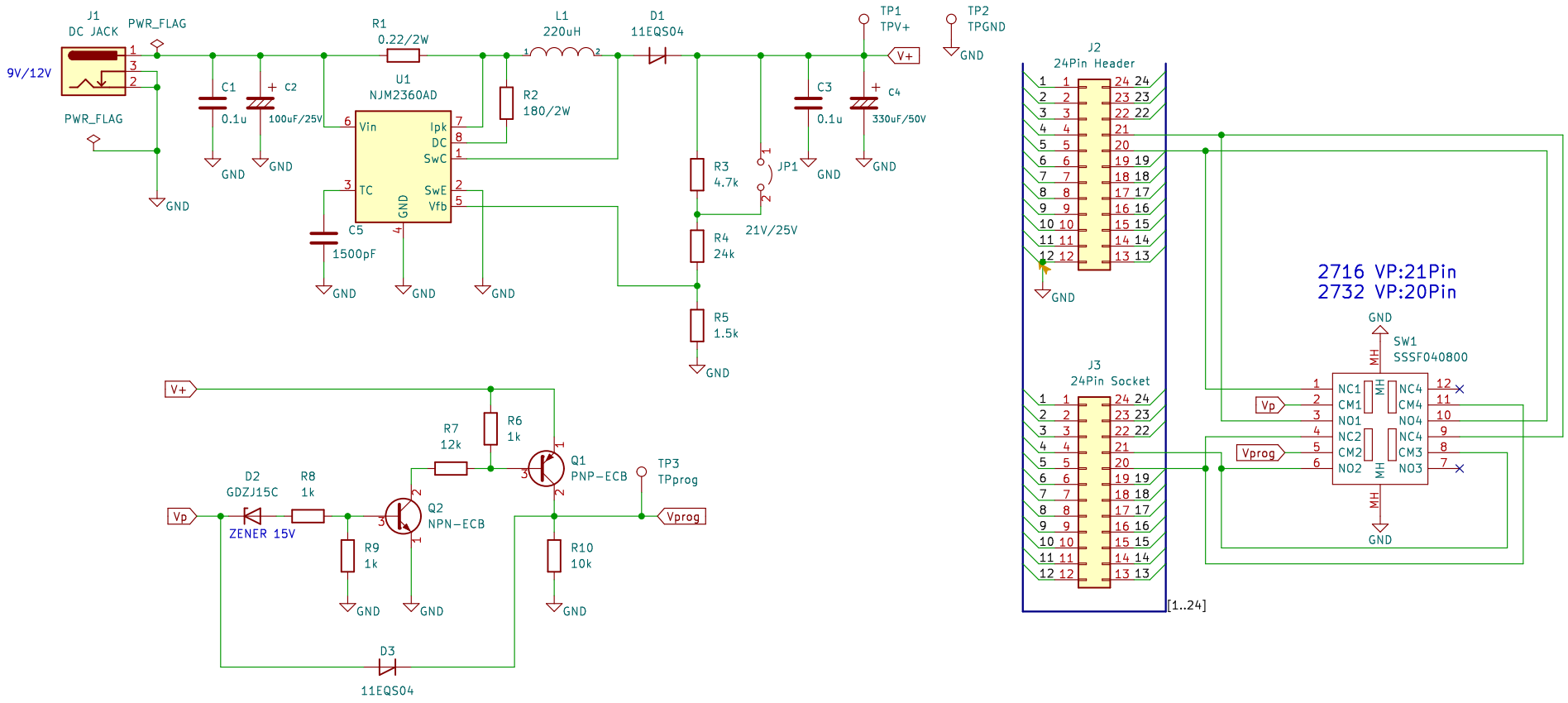

Masahiro Kusunoki (JP3SRS)

Sheet: /

File: KiCad.kicad_sch

Title: TL866 II PLUS 25/21V Adapter

Size: A4	Date: 2022/04/20	Rev:
KiCad E.D.A. kicad (6.0.4)		Id: 1/1