MPU-6000 and MPU-6050
Product Specification
Revision 3.3

ADVANCE INFORMATION

CONTENTS

1 REVISION HISTORY 5
2 PURPOSE AND SCOPE 6
3 PRODUCT OVERVIEW 7
3.1 MPU-60X0 OVERVIEW 7
4 APPLICATIONS 9
5 FEATURES 10
5.1 GYROSCOPE FEATURES 10
5.2 ACCELEROMETER FEATURES 10
5.3 ADDITIONAL FEATURES 10
5.4 MOTIONPROCESSING 11
5.5 CLOCKING 11
6 ELECTRICAL CHARACTERISTICS 12
6.1 GYROSCOPE SPECIFICATIONS 12
6.2 ACCELEROMETER SPECIFICATIONS 13
6.3 ELECTRICAL AND OTHER COMMON SPECIFICATIONS 14
6.4 ELECTRICAL SPECIFICATIONS, CONTINUED 15
6.5 ELECTRICAL SPECIFICATIONS, CONTINUED 16
6.6 ELECTRICAL SPECIFICATIONS, CONTINUED 17
6.7 I^2C TIMING CHARACTERIZATION 18
6.8 SPI TIMING CHARACTERIZATION (MPU-6000 ONLY) 19
6.9 ABSOLUTE MAXIMUM RATINGS 20
7 APPLICATIONS INFORMATION 21
7.1 PIN OUT AND SIGNAL DESCRIPTION 21
7.2 TYPICAL OPERATING CIRCUIT 22
7.3 BILL OF MATERIALS FOR EXTERNAL COMPONENTS 22
7.4 RECOMMENDED POWER-ON PROCEDURE 23
7.5 BLOCK DIAGRAM 24
7.6 OVERVIEW 24
7.7 THREE-AXIS MEMS GYROSCOPE WITH 16-BIT ADCS AND SIGNAL CONDITIONING 25
7.8 THREE-AXIS MEMS ACCELEROMETER WITH 16-BIT ADCS AND SIGNAL CONDITIONING 25
7.9 DIGITAL MOTION PROCESSOR 25
7.10 PRIMARY I^2C AND SPI SERIAL COMMUNICATIONS INTERFACES 25
7.11 AUXILIARY I^2C SERIAL INTERFACE 26

ADVANCE INFORMATION

7.12 SELF-TEST 27
7.13 MPU-60X0 SOLUTION FOR 9-AXIS SENSOR FUSION USING I²C INTERFACE 28
7.14 MPU-6000 USING SPI INTERFACE 29
7.15 INTERNAL CLOCK GENERATION 30
7.16 SENSOR DATA REGISTERS 30
7.17 FIFO 30
7.18 INTERRUPTS 30
7.19 DIGITAL-OUTPUT TEMPERATURE SENSOR 31
7.20 BIAS AND LDO 31
7.21 CHARGE PUMP 31
8 PROGRAMMABLE INTERRUPTS 32
8.1 MOTION INTERRUPT 33
9 DIGITAL INTERFACE 34
9.1 I²C AND SPI (MPU-6000 ONLY) SERIAL INTERFACES 34
9.2 I²C INTERFACE 34
9.3 I²C COMMUNICATIONS PROTOCOL 34
9.4 I²C TERMS 37
9.5 SPI INTERFACE (MPU-6000 ONLY) 38
10 SERIAL INTERFACE CONSIDERATIONS (MPU-6050) 39
10.1 MPU-6050 SUPPORTED INTERFACES 39
10.2 LOGIC LEVELS 39
10.3 LOGIC LEVELS DIAGRAM FOR AUX_*VDDIO* = 0 40
10.4 LOGIC LEVELS DIAGRAM FOR *AUX_VDDIO* = 1 41
11 ASSEMBLY 42
11.1 ORIENTATION OF AXES 42
11.2 PACKAGE DIMENSIONS 43
11.3 PCB DESIGN GUIDELINES 44
11.4 ASSEMBLY PRECAUTIONS 45
11.5 STORAGE SPECIFICATIONS 48
11.6 PACKAGE MARKING SPECIFICATION 48
11.7 TAPE & REEL SPECIFICATION 49
11.8 LABEL 50
11.9 PACKAGING 51
11.10 REPRESENTATIVE SHIPPING CARTON LABEL 52

ADVANCE INFORMATION

12 RELIABILITY 53

12.1 QUALIFICATION TEST POLICY 53

12.2 QUALIFICATION TEST PLAN 53

13 ENVIRONMENTAL COMPLIANCE 54

ADVANCE INFORMATION

1 Revision History

Revision Date	Revision	Description
11/24/2010	1.0	Initial Release
05/19/2011	2.0	For Rev C parts. Clarified wording in sections (3.2, 5.1, 5.2, 6.1-6.4, 6.6, 6.9, 7, 7.1-7.6, 7.11, 7.12, 7.14, 8, 8.2-8.4, 10.3, 10.4, 11, 12.2)
07/28/2011	2.1	Edited supply current numbers for different modes (section 6.4)
08/05/2011	2.2	Unit of measure for accelerometer sensitivity changed from LSB/m*g* to LSB/*g*
10/12/2011	2.3	Updated accelerometer self test specifications in Table 6.2. Updated package dimensions (section 11.2). Updated PCB design guidelines (section 11.3)
10/18/2011	3.0	For Rev D parts. Updated accelerometer specifications in Table 6.2. Updated accelerometer specification note (sections 8.2, 8.3, & 8.4). Updated qualification test plan (section 12.2).
10/24/2011	3.1	Edits for clarity Changed operating voltage range to 2.375V-3.46V Added accelerometer Intelligence Function increment value of 1m*g*/LSB (Section 6.2) Updated absolute maximum rating for acceleration (any axis, unpowered) from 0.3ms to 0.2ms (Section 6.9) Modified absolute maximum rating for Latch-up to Level A and ±100mA (Section 6.9, 12.2)
11/16/2011	3.2	**Updated self-test response specifications for Revision D parts dated with date code 1147 (YYWW) or later.** Edits for clarity Added Gyro self-test (sections 5.1, 6.1, 7.6, 7.12) Added Min/Max limits to Accel self-test response (section 6.2) Updated Accelerometer low power mode operating currents (Section 6.3) Added gyro self test to block diagram (section 7.5) Updated packaging labels and descriptions (sections 11.8 & 11.9)
5/16/2012	3.3	Updated Gyro and Accelerometer self test information (sections 6.1, 6.2, 7.12) Updated latch-up information (Section 6.9) Updated programmable interrupts information (Section 8) Changed shipment information from maximum of 3 reels (15K units) per shipper box to 5 reels (25K units) per shipper box (Section 11.7) Updated packing shipping and label information (Sections 11.8, 11.9) Updated reliability references (Section 12.2)

ADVANCE INFORMATION

2 Purpose and Scope

This product specification provides advanced information regarding the electrical specification and design related information for the MPU-6000™ and MPU-6050™ MotionTracking™ devices, collectively called the MPU-60X0™ or MPU™.

Electrical characteristics are based upon design analysis and simulation results only. Specifications are subject to change without notice. Final specifications will be updated based upon characterization of production silicon. For references to register map and descriptions of individual registers, please refer to the MPU-6000/MPU-6050 Register Map and Register Descriptions document.

The self-test response specifications provided in this document pertain to Revision D parts with date codes of 1147 (YYWW) or later. Please see Section 11.6 for package marking description details.

ADVANCE INFORMATION

3 Product Overview

3.1 MPU-60X0 Overview

MotionInterface™ is becoming a "must-have" function being adopted by smartphone and tablet manufacturers due to the enormous value it adds to the end user experience. In smartphones, it finds use in applications such as gesture commands for applications and phone control, enhanced gaming, augmented reality, panoramic photo capture and viewing, and pedestrian and vehicle navigation. With its ability to precisely and accurately track user motions, MotionTracking technology can convert handsets and tablets into powerful 3D intelligent devices that can be used in applications ranging from health and fitness monitoring to location-based services. Key requirements for MotionInterface enabled devices are small package size, low power consumption, high accuracy and repeatability, high shock tolerance, and application specific performance programmability – all at a low consumer price point.

The MPU-60X0 is the world's first integrated 6-axis MotionTracking device that combines a 3-axis gyroscope, 3-axis accelerometer, and a Digital Motion Processor™ (DMP) all in a small 4x4x0.9mm package. With its dedicated I^2C sensor bus, it directly accepts inputs from an external 3-axis compass to provide a complete 9-axis MotionFusion™ output. The MPU-60X0 MotionTracking device, with its 6-axis integration, on-board MotionFusion™, and run-time calibration firmware, enables manufacturers to eliminate the costly and complex selection, qualification, and system level integration of discrete devices, guaranteeing optimal motion performance for consumers. The MPU-60X0 is also designed to interface with multiple non-inertial digital sensors, such as pressure sensors, on its auxiliary I^2C port. The MPU-60X0 is footprint compatible with the MPU-30X0 family.

The MPU-60X0 features three 16-bit analog-to-digital converters (ADCs) for digitizing the gyroscope outputs and three 16-bit ADCs for digitizing the accelerometer outputs. For precision tracking of both fast and slow motions, the parts feature a user-programmable gyroscope full-scale range of ±250, ±500, ±1000, and ±2000°/sec (dps) and a user-programmable accelerometer full-scale range of ±2*g*, ±4*g*, ±8*g*, and ±16*g*.

An on-chip 1024 Byte FIFO buffer helps lower system power consumption by allowing the system processor to read the sensor data in bursts and then enter a low-power mode as the MPU collects more data. With all the necessary on-chip processing and sensor components required to support many motion-based use cases, the MPU-60X0 uniquely enables low-power MotionInterface applications in portable applications with reduced processing requirements for the system processor. By providing an integrated MotionFusion output, the DMP in the MPU-60X0 offloads the intensive MotionProcessing computation requirements from the system processor, minimizing the need for frequent polling of the motion sensor output.

Communication with all registers of the device is performed using either I^2C at 400kHz or SPI at 1MHz (MPU-6000 only). For applications requiring faster communications, the sensor and interrupt registers may be read using SPI at 20MHz (MPU-6000 only). Additional features include an embedded temperature sensor and an on-chip oscillator with ±1% variation over the operating temperature range.

By leveraging its patented and volume-proven Nasiri-Fabrication platform, which integrates MEMS wafers with companion CMOS electronics through wafer-level bonding, InvenSense has driven the MPU-60X0 package size down to a revolutionary footprint of 4x4x0.9mm (QFN), while providing the highest performance, lowest noise, and the lowest cost semiconductor packaging required for handheld consumer electronic devices. The part features a robust 10,000*g* shock tolerance, and has programmable low-pass filters for the gyroscopes, accelerometers, and the on-chip temperature sensor.

For power supply flexibility, the MPU-60X0 operates from VDD power supply voltage range of 2.375V-3.46V. Additionally, the MPU-6050 provides a VLOGIC reference pin (in addition to its analog supply pin: VDD), which sets the logic levels of its I^2C interface. The VLOGIC voltage may be 1.8V±5% or VDD.

The MPU-6000 and MPU-6050 are identical, except that the MPU-6050 supports the I^2C serial interface only, and has a separate VLOGIC reference pin. The MPU-6000 supports both I^2C and SPI interfaces and has a single supply pin, VDD, which is both the device's logic reference supply and the analog supply for the part. The table below outlines these differences:

ADVANCE INFORMATION

Primary Differences between MPU-6000 and MPU-6050

Part / Item	MPU-6000	MPU-6050
VDD	2.375V-3.46V	2.375V-3.46V
VLOGIC	n/a	1.71V to VDD
Serial Interfaces Supported	I^2C, SPI	I^2C
Pin 8	/CS	VLOGIC
Pin 9	AD0/SDO	AD0
Pin 23	SCL/SCLK	SCL
Pin 24	SDA/SDI	SDA

ADVANCE INFORMATION

4 Applications

- *BlurFree*™ technology (for Video/Still Image Stabilization)
- *AirSign*™ technology (for Security/Authentication)
- *TouchAnywhere*™ technology (for "no touch" UI Application Control/Navigation)
- *MotionCommand*™ technology (for Gesture Short-cuts)
- Motion-enabled game and application framework
- InstantGesture™ iG™ gesture recognition
- Location based services, points of interest, and dead reckoning
- Handset and portable gaming
- Motion-based game controllers
- 3D remote controls for Internet connected DTVs and set top boxes, 3D mice
- Wearable sensors for health, fitness and sports
- Toys

ADVANCE INFORMATION

5 Features

5.1 Gyroscope Features

The triple-axis MEMS gyroscope in the MPU-60X0 includes a wide range of features:

- Digital-output X-, Y-, and Z-Axis angular rate sensors (gyroscopes) with a user-programmable full-scale range of ±250, ±500, ±1000, and ±2000°/sec
- External sync signal connected to the FSYNC pin supports image, video and GPS synchronization
- Integrated 16-bit ADCs enable simultaneous sampling of gyros
- Enhanced bias and sensitivity temperature stability reduces the need for user calibration
- Improved low-frequency noise performance
- Digitally-programmable low-pass filter
- Gyroscope operating current: 3.6mA
- Standby current: 5μA
- Factory calibrated sensitivity scale factor
- User self-test

5.2 Accelerometer Features

The triple-axis MEMS accelerometer in MPU-60X0 includes a wide range of features:

- Digital-output triple-axis accelerometer with a programmable full scale range of ±2*g*, ±4*g*, ±8*g* and ±16*g*
- Integrated 16-bit ADCs enable simultaneous sampling of accelerometers while requiring no external multiplexer
- Accelerometer normal operating current: 500μA
- Low power accelerometer mode current: 10μA at 1.25Hz, 20μA at 5Hz, 60μA at 20Hz, 110μA at 40Hz
- Orientation detection and signaling
- Tap detection
- User-programmable interrupts
- High-G interrupt
- User self-test

5.3 Additional Features

The MPU-60X0 includes the following additional features:

- 9-Axis MotionFusion by the on-chip Digital Motion Processor (DMP)
- Auxiliary master I^2C bus for reading data from external sensors (e.g., magnetometer)
- 3.9mA operating current when all 6 motion sensing axes and the DMP are enabled
- VDD supply voltage range of 2.375V-3.46V
- Flexible VLOGIC reference voltage supports multiple I^2C interface voltages (MPU-6050 only)
- Smallest and thinnest QFN package for portable devices: 4x4x0.9mm
- Minimal cross-axis sensitivity between the accelerometer and gyroscope axes
- 1024 byte FIFO buffer reduces power consumption by allowing host processor to read the data in bursts and then go into a low-power mode as the MPU collects more data
- Digital-output temperature sensor
- User-programmable digital filters for gyroscope, accelerometer, and temp sensor
- 10,000 *g* shock tolerant
- 400kHz Fast Mode I^2C for communicating with all registers
- 1MHz SPI serial interface for communicating with all registers (MPU-6000 only)
- 20MHz SPI serial interface for reading sensor and interrupt registers (MPU-6000 only)

ADVANCE INFORMATION

- MEMS structure hermetically sealed and bonded at wafer level
- RoHS and Green compliant

5.4 MotionProcessing

- Internal Digital Motion Processing™ (DMP™) engine supports 3D MotionProcessing and gesture recognition algorithms
- The MPU-60X0 collects gyroscope and accelerometer data while synchronizing data sampling at a user defined rate. The total dataset obtained by the MPU-60X0 includes 3-Axis gyroscope data, 3-Axis accelerometer data, and temperature data. The MPU's calculated output to the system processor can also include heading data from a digital 3-axis third party magnetometer.
- The FIFO buffers the complete data set, reducing timing requirements on the system processor by allowing the processor burst read the FIFO data. After burst reading the FIFO data, the system processor can save power by entering a low-power sleep mode while the MPU collects more data.
- Programmable interrupt supports features such as gesture recognition, panning, zooming, scrolling, zero-motion detection, tap detection, and shake detection
- Digitally-programmable low-pass filters
- Low-power pedometer functionality allows the host processor to sleep while the DMP maintains the step count.

5.5 Clocking

- On-chip timing generator ±1% frequency variation over full temperature range
- Optional external clock inputs of 32.768kHz or 19.2MHz

ADVANCE INFORMATION

6 Electrical Characteristics

6.1 Gyroscope Specifications

VDD = 2.375V-3.46V, VLOGIC (MPU-6050 only) = 1.8V±5% or VDD, T_A = 25°C

PARAMETER	CONDITIONS	MIN	TYP	MAX	UNITS	NOTES
GYROSCOPE SENSITIVITY						
Full-Scale Range	FS_SEL=0		±250		°/s	
	FS_SEL=1		±500		°/s	
	FS_SEL=2		±1000		°/s	
	FS_SEL=3		±2000		°/s	
Gyroscope ADC Word Length			16		bits	
Sensitivity Scale Factor	FS_SEL=0		131		LSB/(°/s)	
	FS_SEL=1		65.5		LSB/(°/s)	
	FS_SEL=2		32.8		LSB/(°/s)	
	FS_SEL=3		16.4		LSB/(°/s)	
Sensitivity Scale Factor Tolerance	25°C	-3		+3	%	
Sensitivity Scale Factor Variation Over Temperature			±2		%	
Nonlinearity	Best fit straight line; 25°C		0.2		%	
Cross-Axis Sensitivity			±2		%	
GYROSCOPE ZERO-RATE OUTPUT (ZRO)						
Initial ZRO Tolerance	25°C		±20		°/s	
ZRO Variation Over Temperature	-40°C to +85°C		±20		°/s	
Power-Supply Sensitivity (1-10Hz)	Sine wave, 100mVpp; VDD=2.5V		0.2		°/s	
Power-Supply Sensitivity (10 - 250Hz)	Sine wave, 100mVpp; VDD=2.5V		0.2		°/s	
Power-Supply Sensitivity (250Hz - 100kHz)	Sine wave, 100mVpp; VDD=2.5V		4		°/s	
Linear Acceleration Sensitivity	Static		0.1		°/s/*g*	
SELF-TEST RESPONSE						
Relative	Change from factory trim	-14		14	%	1
GYROSCOPE NOISE PERFORMANCE	**FS_SEL=0**					
Total RMS Noise	DLPFCFG=2 (100Hz)		0.05		°/s-rms	
Low-frequency RMS noise	Bandwidth 1Hz to10Hz		0.033		°/s-rms	
Rate Noise Spectral Density	At 10Hz		0.005		°/s/ √ Hz	
GYROSCOPE MECHANICAL FREQUENCIES						
X-Axis		30	33	36	kHz	
Y-Axis		27	30	33	kHz	
Z-Axis		24	27	30	kHz	
LOW PASS FILTER RESPONSE						
	Programmable Range	5		256	Hz	
OUTPUT DATA RATE						
	Programmable	4		8,000	Hz	
GYROSCOPE START-UP TIME	**DLPFCFG=0**					
ZRO Settling (from power-on)	to ±1°/s of Final		30		ms	

1. Please refer to the following document for further information on Self-Test: *MPU-6000/MPU-6050 Register Map and Descriptions*

ADVANCE INFORMATION

6.2 Accelerometer Specifications

VDD = 2.375V-3.46V, VLOGIC (MPU-6050 only) = 1.8V±5% or VDD, T_A = 25°C

PARAMETER	CONDITIONS	MIN	TYP	MAX	UNITS	NOTES
ACCELEROMETER SENSITIVITY						
Full-Scale Range	AFS_SEL=0		±2		*g*	
	AFS_SEL=1		±4		*g*	
	AFS_SEL=2		±8		*g*	
	AFS_SEL=3		±16		*g*	
ADC Word Length	Output in two's complement format		16		bits	
Sensitivity Scale Factor	AFS_SEL=0		16,384		LSB/*g*	
	AFS_SEL=1		8,192		LSB/*g*	
	AFS_SEL=2		4,096		LSB/*g*	
	AFS_SEL=3		2,048		LSB/*g*	
Initial Calibration Tolerance			±3		%	
Sensitivity Change vs. Temperature	AFS_SEL=0, -40°C to +85°C		±0.02		%/°C	
Nonlinearity	Best Fit Straight Line		0.5		%	
Cross-Axis Sensitivity			±2		%	
ZERO-G OUTPUT						
Initial Calibration Tolerance	X and Y axes		±50		m*g*	1
	Z axis		±80		m*g*	
Zero-G Level Change vs. Temperature	X and Y axes, 0°C to +70°C		±35			
	Z axis, 0°C to +70°C		±60		m*g*	
SELF TEST RESPONSE						
Relative	Change from factory trim	-14		14	%	2
NOISE PERFORMANCE						
Power Spectral Density	@10Hz, AFS_SEL=0 & ODR=1kHz		400		µ*g*/ √Hz	
LOW PASS FILTER RESPONSE						
	Programmable Range	5		260	Hz	
OUTPUT DATA RATE						
	Programmable Range	4		1,000	Hz	
INTELLIGENCE FUNCTION INCREMENT			32		m*g*/LSB	

1. Typical zero-g initial calibration tolerance value after MSL3 preconditioning
2. Please refer to the following document for further information on Self-Test: *MPU-6000/MPU-6050 Register Map and Descriptions*

ADVANCE INFORMATION

6.3 Electrical and Other Common Specifications

VDD = 2.375V-3.46V, VLOGIC (MPU-6050 only) = 1.8V±5% or VDD, T_A = 25°C

PARAMETER	CONDITIONS	MIN	TYP	MAX	Units	Notes
TEMPERATURE SENSOR						
Range			-40 to +85		°C	
Sensitivity	Untrimmed		340		LSB/ºC	
Temperature Offset	35ºC		-521		LSB	
Linearity	Best fit straight line (-40°C to +85°C)		±1		°C	
VDD POWER SUPPLY						
Operating Voltages		2.375		3.46	V	
Normal Operating Current	Gyroscope + Accelerometer + DMP		3.9		mA	
	Gyroscope + Accelerometer (DMP disabled)		3.8		mA	
	Gyroscope + DMP (Accelerometer disabled)		3.7		mA	
	Gyroscope only (DMP & Accelerometer disabled)		3.6		mA	
	Accelerometer only (DMP & Gyroscope disabled)		500		µA	
Accelerometer Low Power Mode Current	1.25 Hz update rate		10		µA	
	5 Hz update rate		20		µA	
	20 Hz update rate		70		µA	
	40 Hz update rate		140		µA	
Full-Chip Idle Mode Supply Current			5		µA	
Power Supply Ramp Rate	Monotonic ramp. Ramp rate is 10% to 90% of the final value			100	ms	
VLOGIC REFERENCE VOLTAGE	MPU-6050 only					
Voltage Range	VLOGIC must be ≤VDD at all times	1.71		VDD	V	
Power Supply Ramp Rate	Monotonic ramp. Ramp rate is 10% to 90% of the final value			3	ms	
Normal Operating Current			100		µA	
TEMPERATURE RANGE						
Specified Temperature Range	Performance parameters are not applicable beyond Specified Temperature Range	-40		+85	°C	

ADVANCE INFORMATION

6.4 Electrical Specifications, Continued

VDD = 2.375V-3.46V, VLOGIC (MPU-6050 only) = 1.8V±5% or VDD, T_A = 25°C

PARAMETER	CONDITIONS	MIN	TYP	MAX	Units	Notes
SERIAL INTERFACE						
SPI Operating Frequency, All Registers Read/Write	MPU-6000 only, Low Speed Characterization		100 ±10%		kHz	
	MPU-6000 only, High Speed Characterization		1 ±10%		MHz	
SPI Operating Frequency, Sensor and Interrupt Registers Read Only	MPU-6000 only		20 ±10%		MHz	
I^2C Operating Frequency	All registers, Fast-mode			400	kHz	
	All registers, Standard-mode			100	kHz	
I^2C ADDRESS	AD0 = 0		1101000			
	AD0 = 1		1101001			
DIGITAL INPUTS (SDI/SDA, AD0, SCLK/SCL, FSYNC, /CS, CLKIN)						
V_{IH}, High Level Input Voltage	MPU-6000	0.7*VDD			V	
	MPU-6050	0.7*VLOGIC			V	
V_{IL}, Low Level Input Voltage	MPU-6000			0.3*VDD	V	
	MPU-6050			0.3*VLOGIC	V	
C_I, Input Capacitance			< 5		pF	
DIGITAL OUTPUT (SDO, INT)						
V_{OH}, High Level Output Voltage	R_{LOAD}=1MΩ; MPU-6000	0.9*VDD			V	
	R_{LOAD}=1MΩ; MPU-6050	0.9*VLOGIC			V	
V_{OL1}, LOW-Level Output Voltage	R_{LOAD}=1MΩ; MPU-6000			0.1*VDD	V	
	R_{LOAD}=1MΩ; MPU-6050			0.1*VLOGIC	V	
$V_{OL.INT1}$, INT Low-Level Output Voltage	OPEN=1, 0.3mA sink Current			0.1	V	
Output Leakage Current	OPEN=1		100		nA	
t_{INT}, INT Pulse Width	LATCH_INT_EN=0		50		µs	
DIGITAL OUTPUT (CLKOUT)						
V_{OH}, High Level Output Voltage	R_{LOAD}=1MΩ	0.9*VDD			V	
V_{OL1}, LOW-Level Output Voltage	R_{LOAD}=1MΩ			0.1*VDD	V	

ADVANCE INFORMATION

6.5 Electrical Specifications, Continued

Typical Operating Circuit of Section 7.2, VDD = 2.375V-3.46V, VLOGIC (MPU-6050 only) = 1.8V±5% or VDD, T_A = 25°C

Parameters	Conditions	Typical	Units	Notes
Primary I^2C I/O (SCL, SDA)				
V_{IL}, LOW-Level Input Voltage	MPU-6000	-0.5 to 0.3*VDD	V	
V_{IH}, HIGH-Level Input Voltage	MPU-6000	0.7*VDD to VDD + 0.5V	V	
V_{hys}, Hysteresis	MPU-6000	0.1*VDD	V	
VIL, LOW Level Input Voltage	MPU-6050	-0.5V to 0.3*VLOGIC	V	
VIH, HIGH-Level Input Voltage	MPU-6050	0.7*VLOGIC to VLOGIC + 0.5V	V	
Vhys, Hysteresis	MPU-6050	0.1*VLOGIC	V	
V_{OL1}, LOW-Level Output Voltage	3mA sink current	0 to 0.4	V	
I_{OL}, LOW-Level Output Current	V_{OL} = 0.4V	3	mA	
	V_{OL} = 0.6V	5	mA	
Output Leakage Current		100	nA	
t_{of}, Output Fall Time from V_{IHmax} to V_{ILmax}	C_b bus capacitance in pF	20+0.1C_b to 250	ns	
C_I, Capacitance for Each I/O pin		< 10	pF	
Auxiliary I^2C I/O (AUX_CL, AUX_DA)	**MPU-6050: *AUX_VDDIO*=0**			
V_{IL}, LOW-Level Input Voltage		-0.5V to 0.3*VLOGIC	V	
V_{IH}, HIGH-Level Input Voltage		0.7*VLOGIC to VLOGIC + 0.5V	V	
V_{hys}, Hysteresis		0.1*VLOGIC	V	
V_{OL1}, LOW-Level Output Voltage	VLOGIC > 2V; 1mA sink current	0 to 0.4	V	
V_{OL3}, LOW-Level Output Voltage	VLOGIC < 2V; 1mA sink current	0 to 0.2*VLOGIC	V	
I_{OL}, LOW-Level Output Current	V_{OL} = 0.4V V_{OL} = 0.6V	1 1	mA mA	
Output Leakage Current		100	nA	
t_{of}, Output Fall Time from V_{IHmax} to V_{ILmax}	C_b bus capacitance in pF	20+0.1C_b to 250	ns	
C_I, Capacitance for Each I/O pin		< 10	pF	
Auxiliary I^2C I/O (AUX_CL, AUX_DA)	**MPU-6050: *AUX_VDDIO*=1; MPU-6000**			
V_{IL}, LOW-Level Input Voltage		-0.5 to 0.3*VDD	V	
V_{IH}, HIGH-Level Input Voltage		0.7*VDD to VDD+0.5V	V	
V_{hys}, Hysteresis		0.1*VDD	V	
V_{OL1}, LOW-Level Output Voltage	1mA sink current	0 to 0.4	V	
I_{OL}, LOW-Level Output Current	V_{OL} = 0.4V V_{OL} = 0.6V	1 1	mA mA	
Output Leakage Current		100	nA	
t_{of}, Output Fall Time from V_{IHmax} to V_{ILmax}	C_b bus cap. in pF	20+0.1C_b to 250	ns	
C_I, Capacitance for Each I/O pin		< 10	pF	

ADVANCE INFORMATION

6.6 Electrical Specifications, Continued

Typical Operating Circuit of Section 7.2, VDD = 2.375V-3.46V, VLOGIC (MPU-6050 only) = 1.8V±5% or VDD, T_A = 25°C

Parameters	Conditions	Min	Typical	Max	Units	Notes
INTERNAL CLOCK SOURCE	**CLK_SEL=0,1,2,3**					
Gyroscope Sample Rate, Fast	DLPFCFG=0 SAMPLERATEDIV = 0		8		kHz	
Gyroscope Sample Rate, Slow	DLPFCFG=1,2,3,4,5, or 6 SAMPLERATEDIV = 0		1		kHz	
Accelerometer Sample Rate			1		kHz	
Reference Clock Output	CLKOUTEN = 1		1.024		MHz	
Clock Frequency Initial Tolerance	CLK_SEL=0, 25°C	-5		+5	%	
	CLK_SEL=1,2,3; 25°C	-1		+1	%	
Frequency Variation over Temperature	CLK_SEL=0		-15 to +10		%	
	CLK_SEL=1,2,3		±1		%	
PLL Settling Time	CLK_SEL=1,2,3		1	10	ms	
EXTERNAL 32.768kHz CLOCK	**CLK_SEL=4**					
External Clock Frequency			32.768		kHz	
External Clock Allowable Jitter	Cycle-to-cycle rms		1 to 2		µs	
Gyroscope Sample Rate, Fast	DLPFCFG=0 SAMPLERATEDIV = 0		8.192		kHz	
Gyroscope Sample Rate, Slow	DLPFCFG=1,2,3,4,5, or 6 SAMPLERATEDIV = 0		1.024		kHz	
Accelerometer Sample Rate			1.024		kHz	
Reference Clock Output	CLKOUTEN = 1		1.0486		MHz	
PLL Settling Time			1	10	ms	
EXTERNAL 19.2MHz CLOCK	**CLK_SEL=5**					
External Clock Frequency			19.2		MHz	
Gyroscope Sample Rate	Full programmable range	3.9		8000	Hz	
Gyroscope Sample Rate, Fast Mode	DLPFCFG=0 SAMPLERATEDIV = 0		8		kHz	
Gyroscope Sample Rate, Slow Mode	DLPFCFG=1,2,3,4,5, or 6 SAMPLERATEDIV = 0		1		kHz	
Accelerometer Sample Rate			1		kHz	
Reference Clock Output	CLKOUTEN = 1		1.024		MHz	
PLL Settling Time			1	10	ms	

ADVANCE INFORMATION

6.7 I²C Timing Characterization

Typical Operating Circuit of Section 7.2, VDD = 2.375V-3.46V, VLOGIC (MPU-6050 only) = 1.8V±5% or VDD, T_A = 25°C

Parameters	Conditions	Min	Typical	Max	Units	Notes
I²C TIMING	**I²C FAST-MODE**					
f_{SCL}, SCL Clock Frequency				400	kHz	
$t_{HD.STA}$, (Repeated) START Condition Hold Time		0.6			µs	
t_{LOW}, SCL Low Period		1.3			µs	
t_{HIGH}, SCL High Period		0.6			µs	
$t_{SU.STA}$, Repeated START Condition Setup Time		0.6			µs	
$t_{HD.DAT}$, SDA Data Hold Time		0			µs	
$t_{SU.DAT}$, SDA Data Setup Time		100			ns	
t_r, SDA and SCL Rise Time	C_b bus cap. from 10 to 400pF	$20+0.1C_b$		300	ns	
t_f, SDA and SCL Fall Time	C_b bus cap. from 10 to 400pF	$20+0.1C_b$		300	ns	
$t_{SU.STO}$, STOP Condition Setup Time		0.6			µs	
t_{BUF}, Bus Free Time Between STOP and START Condition		1.3			µs	
C_b, Capacitive Load for each Bus Line			< 400		pF	
$t_{VD.DAT}$, Data Valid Time				0.9	µs	
$t_{VD.ACK}$, Data Valid Acknowledge Time				0.9	µs	

Note: Timing Characteristics apply to both Primary and Auxiliary I²C Bus

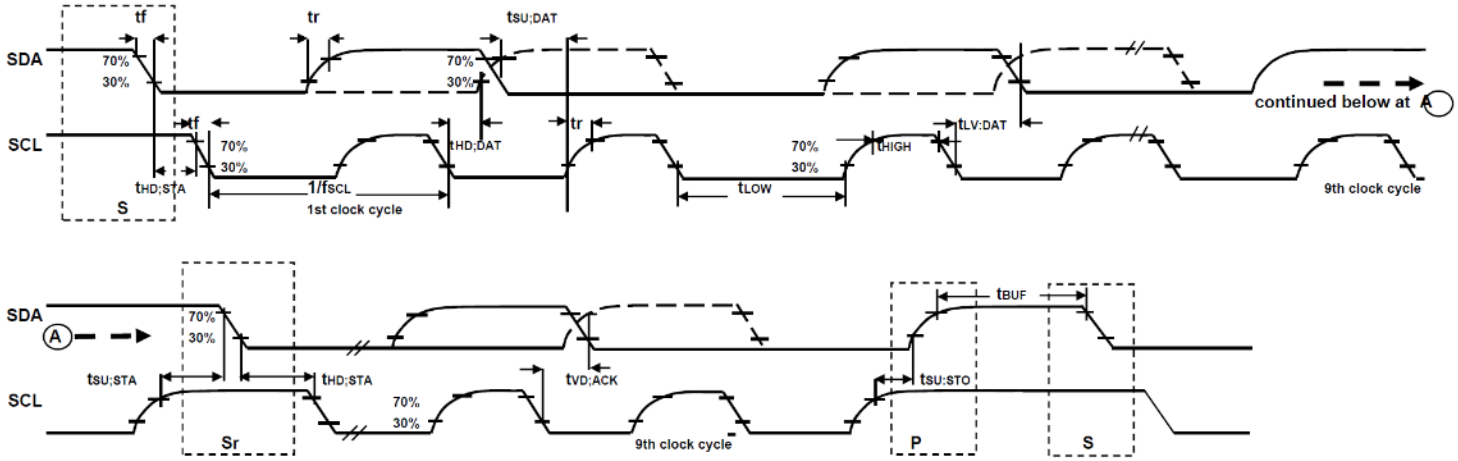

I²C Bus Timing Diagram

ADVANCE INFORMATION

6.8 SPI Timing Characterization (MPU-6000 only)

Typical Operating Circuit of Section 7.2, VDD = 2.375V-3.46V, VLOGIC (MPU-6050 only) = 1.8V±5% or VDD, T_A = 25°C, unless otherwise noted.

Parameters	Conditions	Min	Typical	Max	Units	Notes
SPI TIMING						
f_{SCLK}, SCLK Clock Frequency				1	MHz	
t_{LOW}, SCLK Low Period		400			ns	
t_{HIGH}, SCLK High Period		400			ns	
$t_{SU.CS}$, CS Setup Time		8			ns	
$t_{HD.CS}$, CS Hold Time		500			ns	
$t_{SU.SDI}$, SDI Setup Time		11			ns	
$t_{HD.SDI}$, SDI Hold Time		7			ns	
$t_{VD.SDO}$, SDO Valid Time	C_{load} = 20pF			100	ns	
$t_{HD.SDO}$, SDO Hold Time	C_{load} = 20pF	4			ns	
$t_{DIS.SDO}$, SDO Output Disable Time				10	ns	

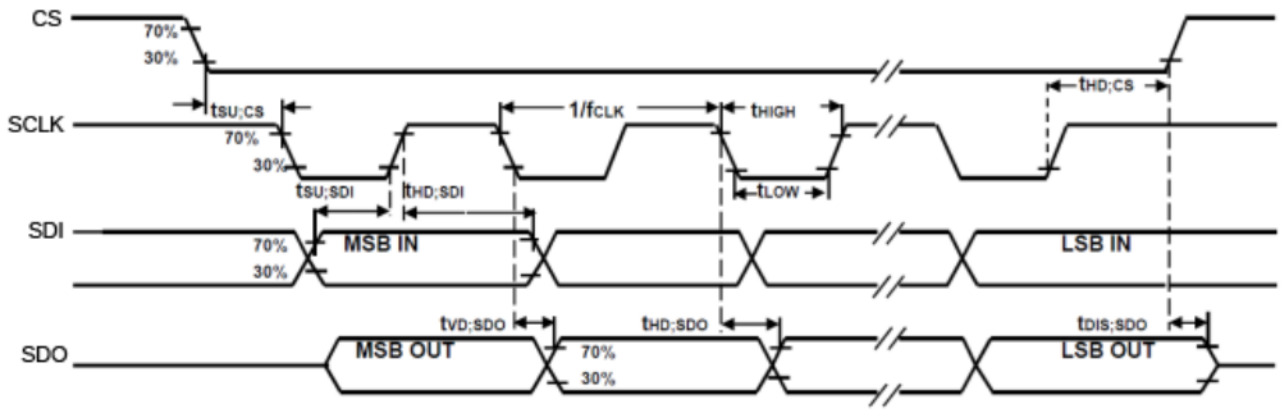

SPI Bus Timing Diagram

ADVANCE INFORMATION

6.9 Absolute Maximum Ratings

Stress above those listed as "Absolute Maximum Ratings" may cause permanent damage to the device. These are stress ratings only and functional operation of the device at these conditions is not implied. Exposure to the absolute maximum ratings conditions for extended periods may affect device reliability.

Parameter	Rating
Supply Voltage, VDD	-0.5V to +6V
VLOGIC Input Voltage Level (MPU-6050)	-0.5V to VDD + 0.5V
REGOUT	-0.5V to 2V
Input Voltage Level (CLKIN, AUX_DA, AD0, FSYNC, INT, SCL, SDA)	-0.5V to VDD + 0.5V
CPOUT (2.5V ≤ VDD ≤ 3.6V)	-0.5V to 30V
Acceleration (Any Axis, unpowered)	10,000g for 0.2ms
Operating Temperature Range	-40°C to +105°C
Storage Temperature Range	-40°C to +125°C
Electrostatic Discharge (ESD) Protection	2kV (HBM); 200V (MM)
Latch-up	JEDEC Class II (2),125°C ±100mA

ADVANCE INFORMATION

7 Applications Information

7.1 Pin Out and Signal Description

Pin Number	MPU-6000	MPU-6050	Pin Name	Pin Description
1	Y	Y	CLKIN	Optional external reference clock input. Connect to GND if unused.
6	Y	Y	AUX_DA	I^2C master serial data, for connecting to external sensors
7	Y	Y	AUX_CL	I^2C Master serial clock, for connecting to external sensors
8	Y		/CS	SPI chip select (0=SPI mode)
8		Y	VLOGIC	Digital I/O supply voltage
9	Y		AD0 / SDO	I^2C Slave Address LSB (AD0); SPI serial data output (SDO)
9		Y	AD0	I^2C Slave Address LSB (AD0)
10	Y	Y	REGOUT	Regulator filter capacitor connection
11	Y	Y	FSYNC	Frame synchronization digital input. Connect to GND if unused.
12	Y	Y	INT	Interrupt digital output (totem pole or open-drain)
13	Y	Y	VDD	Power supply voltage and Digital I/O supply voltage
18	Y	Y	GND	Power supply ground
19, 21	Y	Y	RESV	Reserved. Do not connect.
20	Y	Y	CPOUT	Charge pump capacitor connection
22	Y	Y	CLKOUT	System clock output
23	Y		SCL / SCLK	I^2C serial clock (SCL); SPI serial clock (SCLK)
23		Y	SCL	I^2C serial clock (SCL)
24	Y		SDA / SDI	I^2C serial data (SDA); SPI serial data input (SDI)
24		Y	SDA	I^2C serial data (SDA)
2, 3, 4, 5, 14, 15, 16, 17	Y	Y	NC	Not internally connected. May be used for PCB trace routing.

ADVANCE INFO

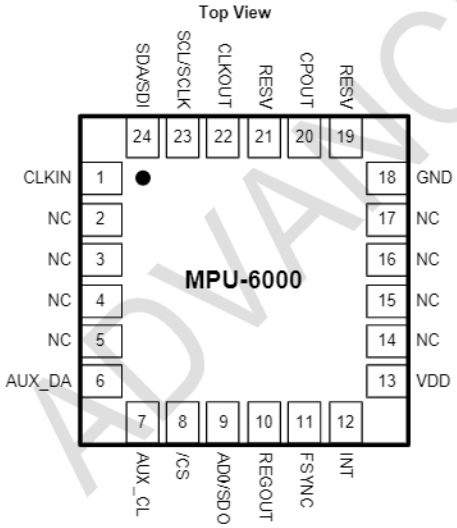

QFN Package
24-pin, 4mm x 4mm x 0.9mm

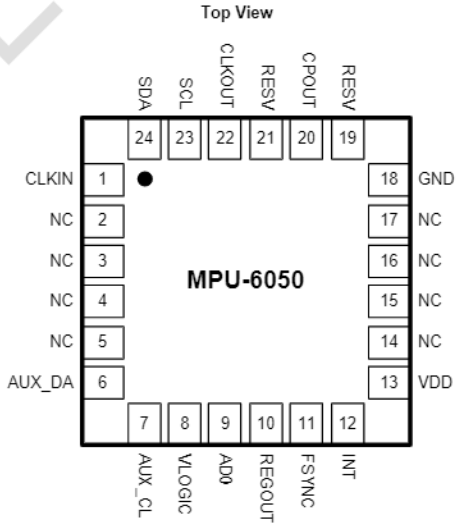

QFN Package
24-pin, 4mm x 4mm x 0.9mm

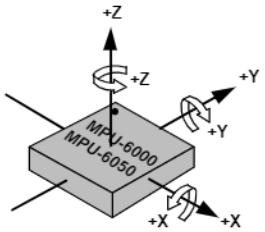

Orientation of Axes of Sensitivity and Polarity of Rotation

7.2 Typical Operating Circuit

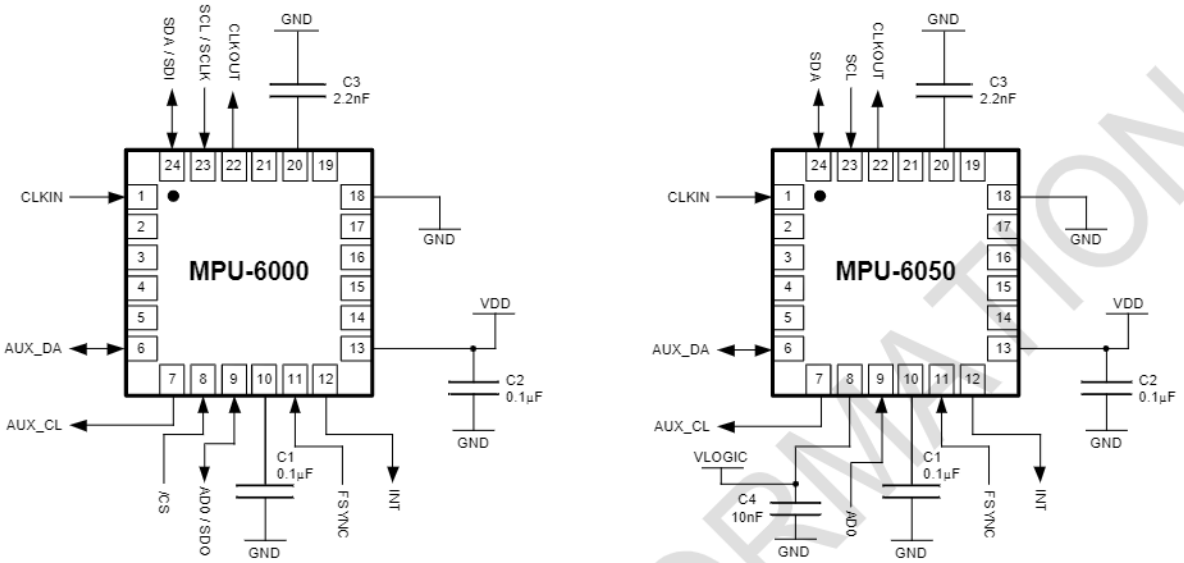

Typical Operating Circuits

7.3 Bill of Materials for External Components

Component	Label	Specification	Quantity
Regulator Filter Capacitor (Pin 10)	C1	Ceramic, X7R, 0.1µF ±10%, 2V	1
VDD Bypass Capacitor (Pin 13)	C2	Ceramic, X7R, 0.1µF ±10%, 4V	1
Charge Pump Capacitor (Pin 20)	C3	Ceramic, X7R, 2.2nF ±10%, 50V	1
VLOGIC Bypass Capacitor (Pin 8)	C4*	Ceramic, X7R, 10nF ±10%, 4V	1

* MPU-6050 Only.

ADVANCE INFORMATION

7.4 Recommended Power-on Procedure

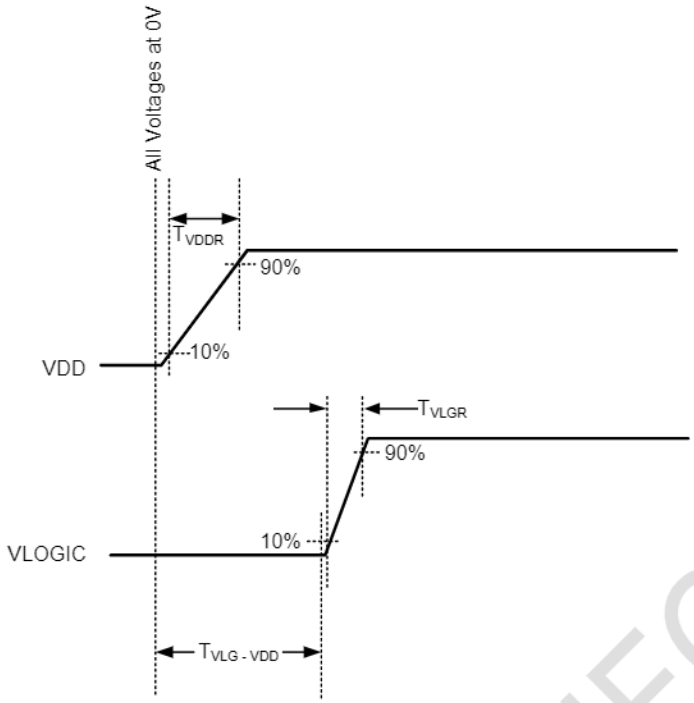

Power-Up Sequencing

1. VLOGIC amplitude must always be ≤VDD amplitude
2. T_{VDDR} is VDD rise time: Time for VDD to rise from 10% to 90% of its final value
3. T_{VDDR} is ≤100ms
4. T_{VLGR} is VLOGIC rise time: Time for VLOGIC to rise from 10% to 90% of its final value
5. T_{VLGR} is ≤3ms
6. $T_{VLG-VDD}$ is the delay from the start of VDD ramp to the start of VLOGIC rise
7. $T_{VLG-VDD}$ is ≥0
8. VDD and VLOGIC must be monotonic ramps

ADVANCE INFORMATION

7.5 Block Diagram

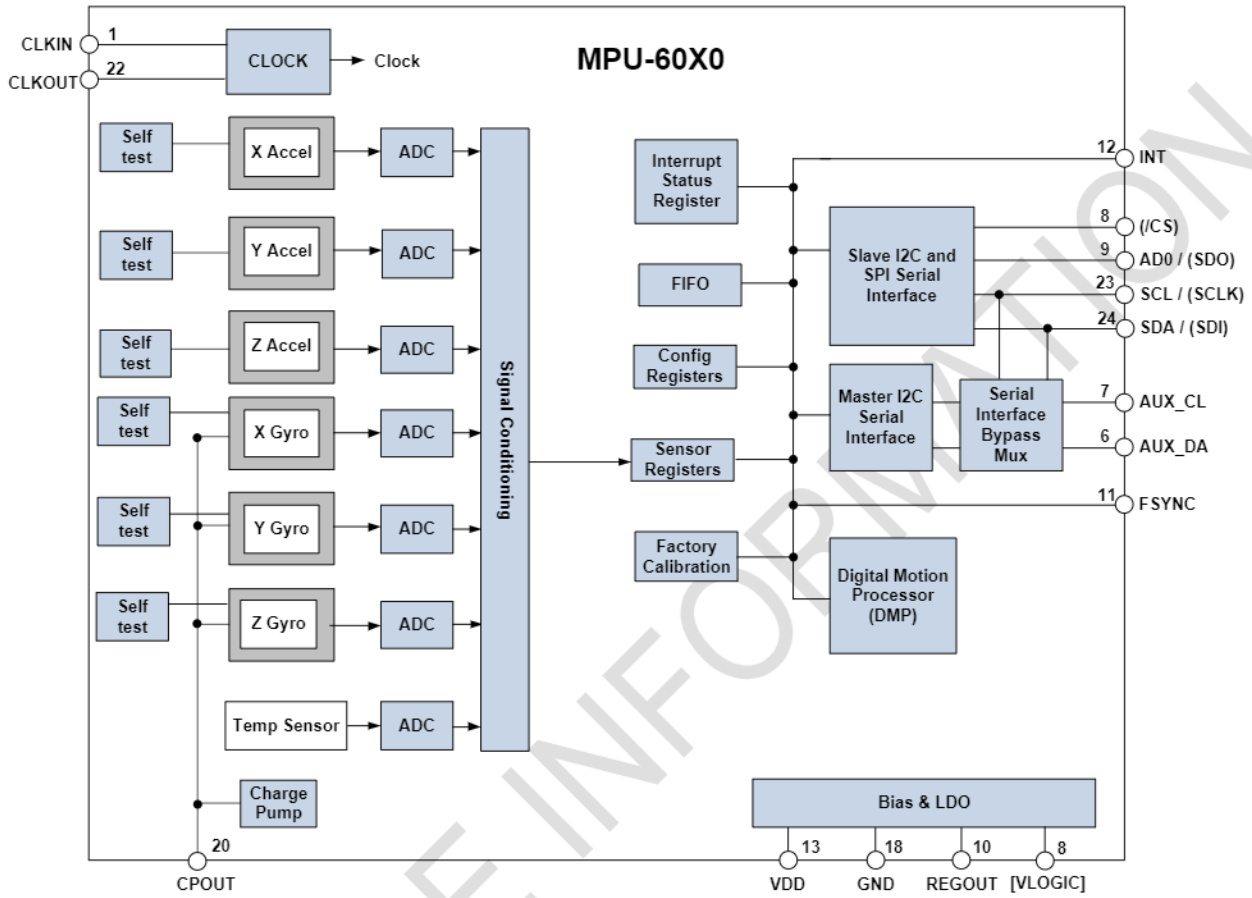

7.6 Overview

The MPU-60X0 is comprised of the following key blocks and functions:

- Three-axis MEMS rate gyroscope sensor with 16-bit ADCs and signal conditioning
- Three-axis MEMS accelerometer sensor with 16-bit ADCs and signal conditioning
- Digital Motion Processor (DMP) engine
- Primary I^2C and SPI (MPU-6000 only) serial communications interfaces
- Auxiliary I^2C serial interface for 3rd party magnetometer & other sensors
- Clocking
- Sensor Data Registers
- FIFO
- Interrupts
- Digital-Output Temperature Sensor
- Gyroscope & Accelerometer Self-test
- Bias and LDO
- Charge Pump

ADVANCE INFORMATION

7.7 Three-Axis MEMS Gyroscope with 16-bit ADCs and Signal Conditioning

The MPU-60X0 consists of three independent vibratory MEMS rate gyroscopes, which detect rotation about the X-, Y-, and Z- Axes. When the gyros are rotated about any of the sense axes, the Coriolis Effect causes a vibration that is detected by a capacitive pickoff. The resulting signal is amplified, demodulated, and filtered to produce a voltage that is proportional to the angular rate. This voltage is digitized using individual on-chip 16-bit Analog-to-Digital Converters (ADCs) to sample each axis. The full-scale range of the gyro sensors may be digitally programmed to ±250, ±500, ±1000, or ±2000 degrees per second (dps). The ADC sample rate is programmable from 8,000 samples per second, down to 3.9 samples per second, and user-selectable low-pass filters enable a wide range of cut-off frequencies.

7.8 Three-Axis MEMS Accelerometer with 16-bit ADCs and Signal Conditioning

The MPU-60X0's 3-Axis accelerometer uses separate proof masses for each axis. Acceleration along a particular axis induces displacement on the corresponding proof mass, and capacitive sensors detect the displacement differentially. The MPU-60X0's architecture reduces the accelerometers' susceptibility to fabrication variations as well as to thermal drift. When the device is placed on a flat surface, it will measure 0*g* on the X- and Y-axes and +1*g* on the Z-axis. The accelerometers' scale factor is calibrated at the factory and is nominally independent of supply voltage. Each sensor has a dedicated sigma-delta ADC for providing digital outputs. The full scale range of the digital output can be adjusted to ±2*g*, ±4*g*, ±8*g*, or ±16*g*.

7.9 Digital Motion Processor

The embedded Digital Motion Processor (DMP) is located within the MPU-60X0 and offloads computation of motion processing algorithms from the host processor. The DMP acquires data from accelerometers, gyroscopes, and additional 3rd party sensors such as magnetometers, and processes the data. The resulting data can be read from the DMP's registers, or can be buffered in a FIFO. The DMP has access to one of the MPU's external pins, which can be used for generating interrupts.

The purpose of the DMP is to offload both timing requirements and processing power from the host processor. Typically, motion processing algorithms should be run at a high rate, often around 200Hz, in order to provide accurate results with low latency. This is required even if the application updates at a much lower rate; for example, a low power user interface may update as slowly as 5Hz, but the motion processing should still run at 200Hz. The DMP can be used as a tool in order to minimize power, simplify timing, simplify the software architecture, and save valuable MIPS on the host processor for use in the application.

7.10 Primary I^2C and SPI Serial Communications Interfaces

The MPU-60X0 communicates to a system processor using either a SPI (MPU-6000 only) or an I^2C serial interface. The MPU-60X0 always acts as a slave when communicating to the system processor. The LSB of the of the I^2C slave address is set by pin 9 (AD0).

The logic levels for communications between the MPU-60X0 and its master are as follows:

- MPU-6000: The logic level for communications with the master is set by the voltage on VDD
- MPU-6050: The logic level for communications with the master is set by the voltage on VLOGIC

For further information regarding the logic levels of the MPU-6050, please refer to Section 10.

ADVANCE INFORMATION

7.11 Auxiliary I^{2}C Serial Interface

The MPU-60X0 has an auxiliary I^{2}C bus for communicating to an off-chip 3-Axis digital output magnetometer or other sensors. This bus has two operating modes:

- I^{2}C Master Mode: The MPU-60X0 acts as a master to any external sensors connected to the auxiliary I^{2}C bus
- Pass-Through Mode: The MPU-60X0 directly connects the primary and auxiliary I^{2}C buses together, allowing the system processor to directly communicate with any external sensors.

Auxiliary I^{2}C Bus Modes of Operation:

- I^{2}C Master Mode: Allows the MPU-60X0 to directly access the data registers of external digital sensors, such as a magnetometer. In this mode, the MPU-60X0 directly obtains data from auxiliary sensors, allowing the on-chip DMP to generate sensor fusion data without intervention from the system applications processor.

  For example, In I^{2}C Master mode, the MPU-60X0 can be configured to perform burst reads, returning the following data from a magnetometer:

  - X magnetometer data (2 bytes)
  - Y magnetometer data (2 bytes)
  - Z magnetometer data (2 bytes)

  The I^{2}C Master can be configured to read up to 24 bytes from up to 4 auxiliary sensors. A fifth sensor can be configured to work single byte read/write mode.

- Pass-Through Mode: Allows an external system processor to act as master and directly communicate to the external sensors connected to the auxiliary I^{2}C bus pins (AUX_DA and AUX_CL). In this mode, the auxiliary I^{2}C bus control logic (3rd party sensor interface block) of the MPU-60X0 is disabled, and the auxiliary I^{2}C pins AUX_DA and AUX_CL (Pins 6 and 7) are connected to the main I^{2}C bus (Pins 23 and 24) through analog switches.

  Pass-Through Mode is useful for configuring the external sensors, or for keeping the MPU-60X0 in a low-power mode when only the external sensors are used.

  In Pass-Through Mode the system processor can still access MPU-60X0 data through the I^{2}C interface.

Auxiliary I^{2}C Bus IO Logic Levels

- MPU-6000: The logic level of the auxiliary I^{2}C bus is VDD
- MPU-6050: The logic level of the auxiliary I^{2}C bus can be programmed to be either VDD or VLOGIC

For further information regarding the MPU-6050's logic levels, please refer to Section 10.2.

ADVANCE INFORMATION

7.12 Self-Test

Please refer to the MPU-6000/MPU-6050 Register Map and Register Descriptions document for more details on self test.

Self-test allows for the testing of the mechanical and electrical portions of the sensors. The self-test for each measurement axis can be activated by means of the gyroscope and accelerometer self-test registers (registers 13 to 16).

When self-test is activated, the electronics cause the sensors to be actuated and produce an output signal. The output signal is used to observe the self-test response.

The self-test response is defined as follows:

Self-test response = Sensor output with self-test enabled – Sensor output without self-test enabled

The self-test response for each accelerometer axis is defined in the accelerometer specification table (Section 6.2), while that for each gyroscope axis is defined in the gyroscope specification table (Section 6.1).

When the value of the self-test response is within the min/max limits of the product specification, the part has passed self test. When the self-test response exceeds the min/max values, the part is deemed to have failed self-test. Code for operating self test code is included within the MotionApps software provided by InvenSense.

ADVANCE INFORMATION

7.13 MPU-60X0 Solution for 9-axis Sensor Fusion Using I²C Interface

In the figure below, the system processor is an I²C master to the MPU-60X0. In addition, the MPU-60X0 is an I²C master to the optional external compass sensor. The MPU-60X0 has limited capabilities as an I²C Master, and depends on the system processor to manage the initial configuration of any auxiliary sensors. The MPU-60X0 has an interface bypass multiplexer, which connects the system processor I²C bus pins 23 and 24 (SDA and SCL) directly to the auxiliary sensor I²C bus pins 6 and 7 (AUX_DA and AUX_CL).

Once the auxiliary sensors have been configured by the system processor, the interface bypass multiplexer should be disabled so that the MPU-60X0 auxiliary I²C master can take control of the sensor I²C bus and gather data from the auxiliary sensors.

For further information regarding I²C master control, please refer to Section 10.

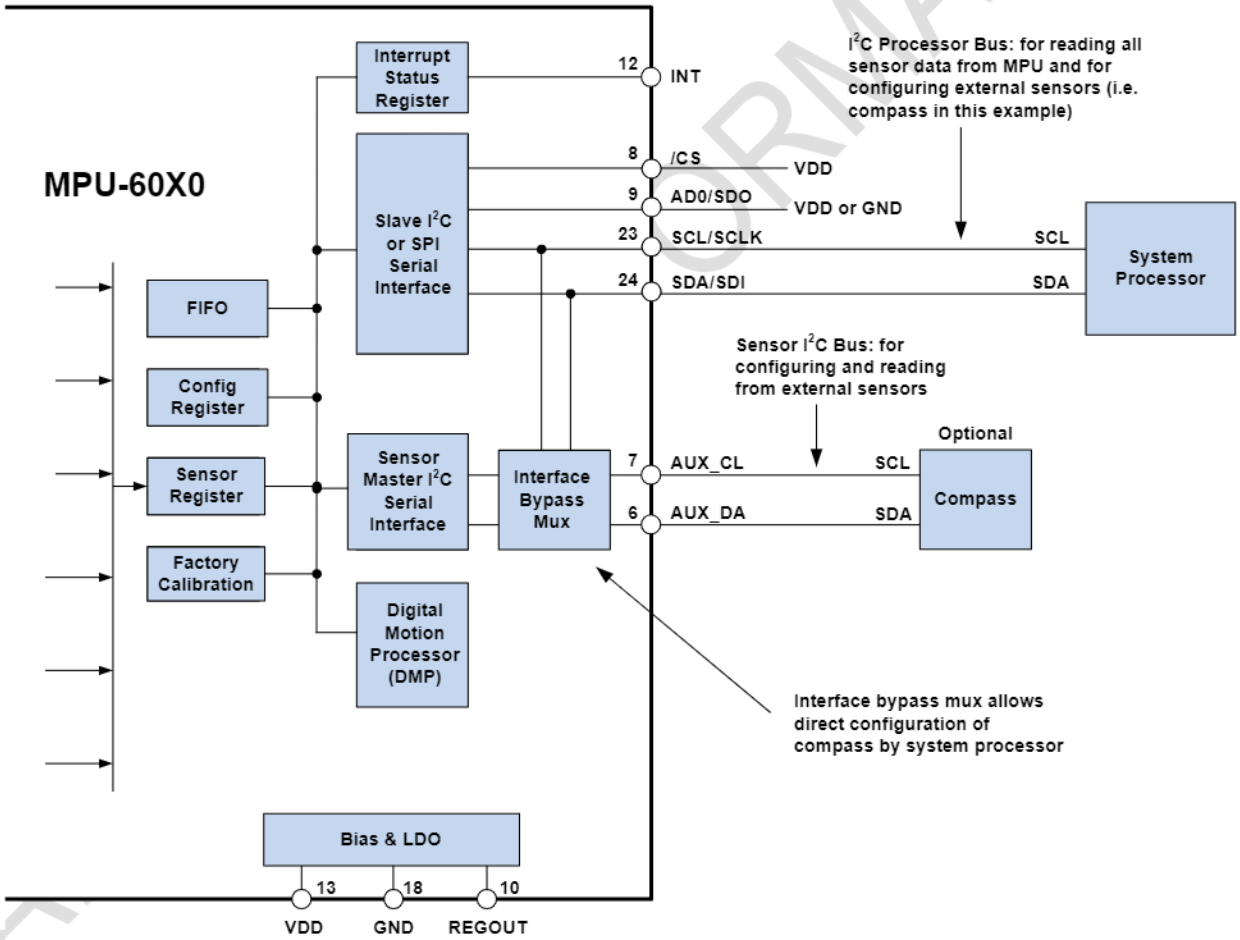

7.14 MPU-6000 Using SPI Interface

In the figure below, the system processor is an SPI master to the MPU-6000. Pins 8, 9, 23, and 24 are used to support the /CS, SDO, SCLK, and SDI signals for SPI communications. Because these SPI pins are shared with the I^2C slave pins (9, 23 and 24), the system processor cannot access the auxiliary I^2C bus through the interface bypass multiplexer, which connects the processor I^2C interface pins to the sensor I^2C interface pins.

Since the MPU-6000 has limited capabilities as an I^2C Master, and depends on the system processor to manage the initial configuration of any auxiliary sensors, another method must be used for programming the sensors on the auxiliary sensor I^2C bus pins 6 and 7 (AUX_DA and AUX_CL).

When using SPI communications between the MPU-6000 and the system processor, configuration of devices on the auxiliary I^2C sensor bus can be achieved by using I^2C Slaves 0-4 to perform read and write transactions on any device and register on the auxiliary I^2C bus. The I^2C Slave 4 interface can be used to perform only single byte read and write transactions.

Once the external sensors have been configured, the MPU-6000 can perform single or multi-byte reads using the sensor I^2C bus. The read results from the Slave 0-3 controllers can be written to the FIFO buffer as well as to the external sensor registers.

For further information regarding the control of the MPU-60X0's auxiliary I^2C interface, please refer to the MPU-6000/MPU-6050 Register Map and Register Descriptions document.

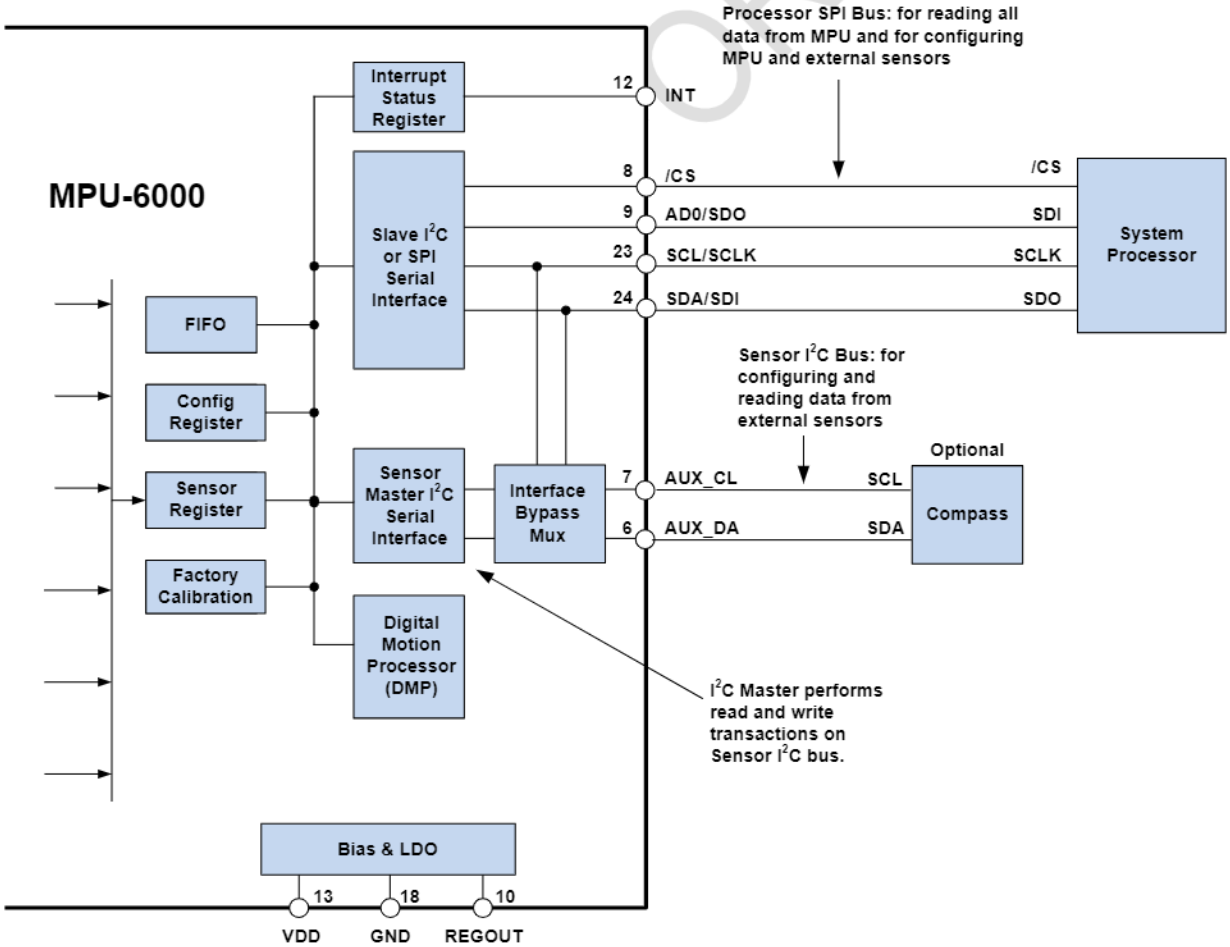

7.15 Internal Clock Generation

The MPU-60X0 has a flexible clocking scheme, allowing a variety of internal or external clock sources to be used for the internal synchronous circuitry. This synchronous circuitry includes the signal conditioning and ADCs, the DMP, and various control circuits and registers. An on-chip PLL provides flexibility in the allowable inputs for generating this clock.

Allowable internal sources for generating the internal clock are:

- An internal relaxation oscillator
- Any of the X, Y, or Z gyros (MEMS oscillators with a variation of ±1% over temperature)

Allowable external clocking sources are:

- 32.768kHz square wave
- 19.2MHz square wave

Selection of the source for generating the internal synchronous clock depends on the availability of external sources and the requirements for power consumption and clock accuracy. These requirements will most likely vary by mode of operation. For example, in one mode, where the biggest concern is power consumption, the user may wish to operate the Digital Motion Processor of the MPU-60X0 to process accelerometer data, while keeping the gyros off. In this case, the internal relaxation oscillator is a good clock choice. However, in another mode, where the gyros are active, selecting the gyros as the clock source provides for a more accurate clock source.

Clock accuracy is important, since timing errors directly affect the distance and angle calculations performed by the Digital Motion Processor (and by extension, by any processor).

There are also start-up conditions to consider. When the MPU-60X0 first starts up, the device uses its internal clock until programmed to operate from another source. This allows the user, for example, to wait for the MEMS oscillators to stabilize before they are selected as the clock source.

7.16 Sensor Data Registers

The sensor data registers contain the latest gyro, accelerometer, auxiliary sensor, and temperature measurement data. They are read-only registers, and are accessed via the serial interface. Data from these registers may be read anytime. However, the interrupt function may be used to determine when new data is available.

For a table of interrupt sources please refer to Section 8.

7.17 FIFO

The MPU-60X0 contains a 1024-byte FIFO register that is accessible via the Serial Interface. The FIFO configuration register determines which data is written into the FIFO. Possible choices include gyro data, accelerometer data, temperature readings, auxiliary sensor readings, and FSYNC input. A FIFO counter keeps track of how many bytes of valid data are contained in the FIFO. The FIFO register supports burst reads. The interrupt function may be used to determine when new data is available.

For further information regarding the FIFO, please refer to the MPU-6000/MPU-6050 Register Map and Register Descriptions document.

7.18 Interrupts

Interrupt functionality is configured via the Interrupt Configuration register. Items that are configurable include the INT pin configuration, the interrupt latching and clearing method, and triggers for the interrupt. Items that can trigger an interrupt are (1) Clock generator locked to new reference oscillator (used when switching clock

ADVANCE INFORMATION

sources); (2) new data is available to be read (from the FIFO and Data registers); (3) accelerometer event interrupts; and (4) the MPU-60X0 did not receive an acknowledge from an auxiliary sensor on the secondary I^2C bus. The interrupt status can be read from the Interrupt Status register.

For further information regarding interrupts, please refer to the MPU-60X0 Register Map and Register Descriptions document.

For information regarding the MPU-60X0's accelerometer event interrupts, please refer to Section 8.

7.19 Digital-Output Temperature Sensor

An on-chip temperature sensor and ADC are used to measure the MPU-60X0 die temperature. The readings from the ADC can be read from the FIFO or the Sensor Data registers.

7.20 Bias and LDO

The bias and LDO section generates the internal supply and the reference voltages and currents required by the MPU-60X0. Its two inputs are an unregulated VDD of 2.375 to 3.46V and a VLOGIC logic reference supply voltage of 1.71V to VDD (MPU-6050 only). The LDO output is bypassed by a capacitor at REGOUT. For further details on the capacitor, please refer to the Bill of Materials for External Components (Section 7.3).

7.21 Charge Pump

An on-board charge pump generates the high voltage required for the MEMS oscillators. Its output is bypassed by a capacitor at CPOUT. For further details on the capacitor, please refer to the Bill of Materials for External Components (Section 7.3).

ADVANCE INFORMATION

8 Programmable Interrupts

The MPU-60X0 has a programmable interrupt system which can generate an interrupt signal on the INT pin. Status flags indicate the source of an interrupt. Interrupt sources may be enabled and disabled individually.

Table of Interrupt Sources

Interrupt Name	Module
Motion Detection	Motion
FIFO Overflow	FIFO
Data Ready	Sensor Registers
I^2C Master errors: Lost Arbitration, NACKs	I^2C Master
I^2C Slave 4	I^2C Master

For information regarding the interrupt enable/disable registers and flag registers, please refer to the MPU-6000/MPU-6050 Register Map and Register Descriptions document. Some interrupt sources are explained below.

ADVANCE INFORMATION

8.1 Motion Interrupt

The MPU-60X0 provides Motion detection capability. Accelerometer measurements are passed through a configurable digital high pass filter (DHPF) in order to eliminate bias due to gravity. A qualifying motion sample is one where the high passed sample from any axis has an absolute value exceeding a user-programmable threshold. A counter increments for each qualifying sample, and decrements for each non-qualifying sample. Once the counter reaches a user-programmable counter threshold, a motion interrupt is triggered. The axis and polarity which caused the interrupt to be triggered is flagged in the MOT_DETECT_STATUS register.

Motion detection has a configurable acceleration threshold MOT_THR specified in 1 m*g* increments. The counter threshold MOT_DUR is specified in 1 ms increments. The decrement rate for non-qualifying samples is also configurable. The MOT_DETECT_CTRL register allows the user to specify whether a non-qualifying sample makes the counter reset to zero, or decrement in steps of 1, 2, or 4.

The flow chart below explains how the motion interrupt should be used. Please refer to the MPU-6000/MPU-6050 Register Map and Register Descriptions document for descriptions of the registers referenced in the flow chart.

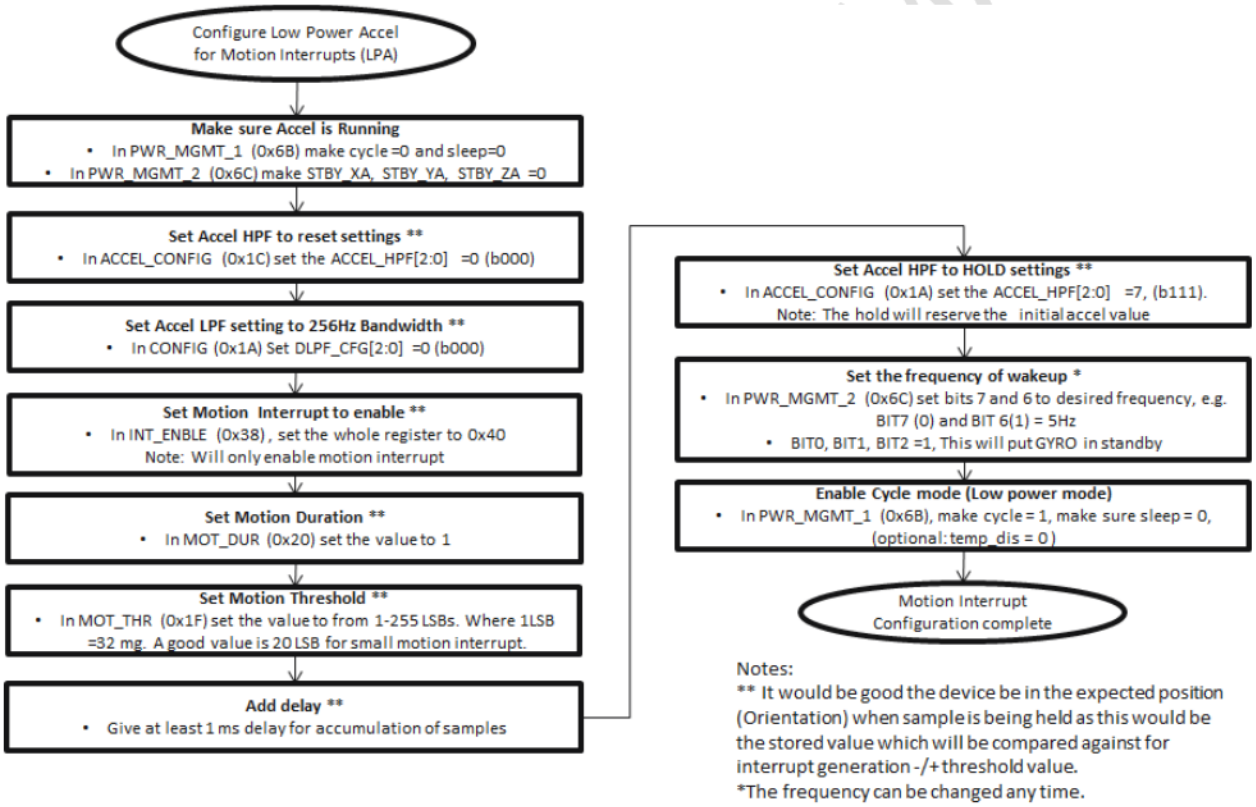

9 Digital Interface

9.1 I²C and SPI (MPU-6000 only) Serial Interfaces

The internal registers and memory of the MPU-6000/MPU-6050 can be accessed using either I²C at 400 kHz or SPI at 1MHz (MPU-6000 only). SPI operates in four-wire mode.

Serial Interface

Pin Number	MPU-6000	MPU-6050	Pin Name	Pin Description
8	Y		/CS	SPI chip select (0=SPI enable)
8		Y	VLOGIC	Digital I/O supply voltage. VLOGIC must be ≤ VDD at all times.
9	Y		AD0 / SDO	I²C Slave Address LSB (AD0); SPI serial data output (SDO)
9		Y	AD0	I²C Slave Address LSB
23	Y		SCL / SCLK	I²C serial clock (SCL); SPI serial clock (SCLK)
23		Y	SCL	I²C serial clock
24	Y		SDA / SDI	I²C serial data (SDA); SPI serial data input (SDI)
24		Y	SDA	I²C serial data

Note:

To prevent switching into I²C mode when using SPI (MPU-6000), the I²C interface should be disabled by setting the *I2C_IF_DIS* configuration bit. Setting this bit should be performed immediately after waiting for the time specified by the "Start-Up Time for Register Read/Write" in Section 6.3.

For further information regarding the *I2C_IF_DIS* bit, please refer to the MPU-6000/MPU-6050 Register Map and Register Descriptions document.

9.2 I²C Interface

I²C is a two-wire interface comprised of the signals serial data (SDA) and serial clock (SCL). In general, the lines are open-drain and bi-directional. In a generalized I²C interface implementation, attached devices can be a master or a slave. The master device puts the slave address on the bus, and the slave device with the matching address acknowledges the master.

The MPU-60X0 always operates as a slave device when communicating to the system processor, which thus acts as the master. SDA and SCL lines typically need pull-up resistors to VDD. The maximum bus speed is 400 kHz.

The slave address of the MPU-60X0 is b110100X which is 7 bits long. The LSB bit of the 7 bit address is determined by the logic level on pin AD0. This allows two MPU-60X0s to be connected to the same I²C bus. When used in this configuration, the address of the one of the devices should be b1101000 (pin AD0 is logic low) and the address of the other should be b1101001 (pin AD0 is logic high).

9.3 I²C Communications Protocol

START (S) and STOP (P) Conditions

Communication on the I²C bus starts when the master puts the START condition (S) on the bus, which is defined as a HIGH-to-LOW transition of the SDA line while SCL line is HIGH (see figure below). The bus is considered to be busy until the master puts a STOP condition (P) on the bus, which is defined as a LOW to HIGH transition on the SDA line while SCL is HIGH (see figure below).

ADVANCE INFORMATION

Additionally, the bus remains busy if a repeated START (Sr) is generated instead of a STOP condition.

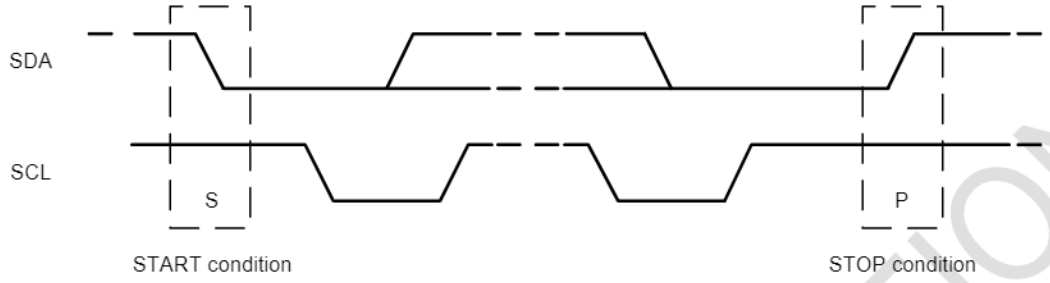

START and STOP Conditions

Data Format / Acknowledge

I^2C data bytes are defined to be 8-bits long. There is no restriction to the number of bytes transmitted per data transfer. Each byte transferred must be followed by an acknowledge (ACK) signal. The clock for the acknowledge signal is generated by the master, while the receiver generates the actual acknowledge signal by pulling down SDA and holding it low during the HIGH portion of the acknowledge clock pulse.

If a slave is busy and cannot transmit or receive another byte of data until some other task has been performed, it can hold SCL LOW, thus forcing the master into a wait state. Normal data transfer resumes when the slave is ready, and releases the clock line (refer to the following figure).

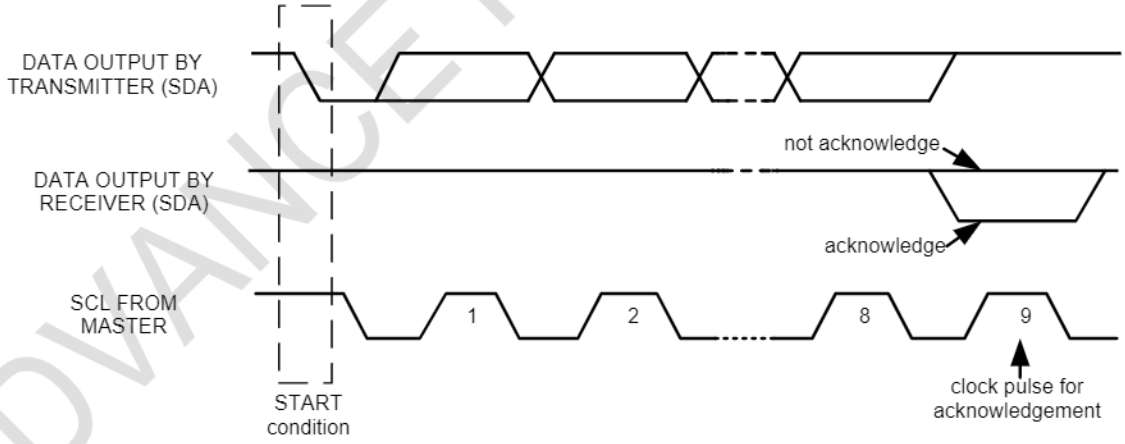

Acknowledge on the I^2C Bus

ADVANCE INFORMATION

Communications

After beginning communications with the START condition (S), the master sends a 7-bit slave address followed by an 8th bit, the read/write bit. The read/write bit indicates whether the master is receiving data from or is writing to the slave device. Then, the master releases the SDA line and waits for the acknowledge signal (ACK) from the slave device. Each byte transferred must be followed by an acknowledge bit. To acknowledge, the slave device pulls the SDA line LOW and keeps it LOW for the high period of the SCL line. Data transmission is always terminated by the master with a STOP condition (P), thus freeing the communications line. However, the master can generate a repeated START condition (Sr), and address another slave without first generating a STOP condition (P). A LOW to HIGH transition on the SDA line while SCL is HIGH defines the stop condition. All SDA changes should take place when SCL is low, with the exception of start and stop conditions.

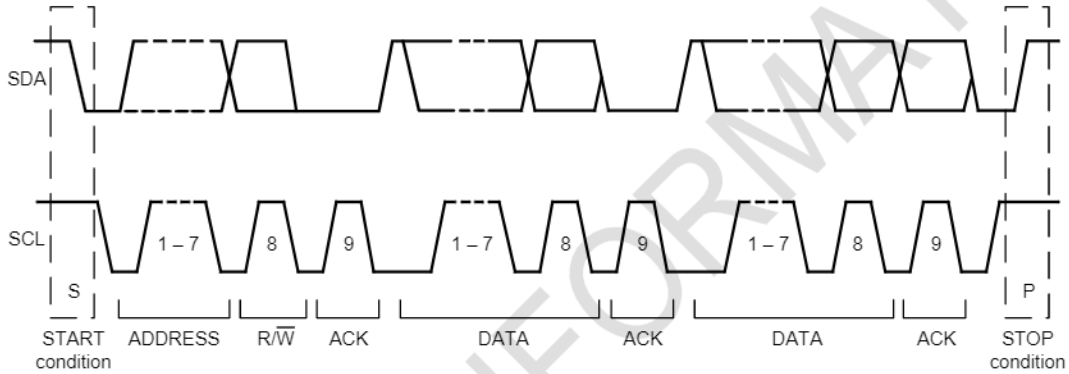

Complete I²C Data Transfer

To write the internal MPU-60X0 registers, the master transmits the start condition (S), followed by the I²C address and the write bit (0). At the 9th clock cycle (when the clock is high), the MPU-60X0 acknowledges the transfer. Then the master puts the register address (RA) on the bus. After the MPU-60X0 acknowledges the reception of the register address, the master puts the register data onto the bus. This is followed by the ACK signal, and data transfer may be concluded by the stop condition (P). To write multiple bytes after the last ACK signal, the master can continue outputting data rather than transmitting a stop signal. In this case, the MPU-60X0 automatically increments the register address and loads the data to the appropriate register. The following figures show single and two-byte write sequences.

Single-Byte Write Sequence

Master	S	AD+W		RA		DATA		P
Slave			ACK		ACK		ACK	

Burst Write Sequence

Master	S	AD+W		RA		DATA		DATA		P
Slave			ACK		ACK		ACK		ACK	

ADVANCE INFORMATION

To read the internal MPU-60X0 registers, the master sends a start condition, followed by the I^2C address and a write bit, and then the register address that is going to be read. Upon receiving the ACK signal from the MPU-60X0, the master transmits a start signal followed by the slave address and read bit. As a result, the MPU-60X0 sends an ACK signal and the data. The communication ends with a not acknowledge (NACK) signal and a stop bit from master. The NACK condition is defined such that the SDA line remains high at the 9th clock cycle. The following figures show single and two-byte read sequences.

Single-Byte Read Sequence

Master	S	AD+W		RA		S	AD+R			NACK	P
Slave			ACK		ACK			ACK	DATA		

Burst Read Sequence

Master	S	AD+W		RA		S	AD+R			ACK		NACK	P
Slave			ACK		ACK			ACK	DATA		DATA		

9.4 I^2C Terms

Signal	Description
S	Start Condition: SDA goes from high to low while SCL is high
AD	Slave I^2C address
W	Write bit (0)
R	Read bit (1)
ACK	Acknowledge: SDA line is low while the SCL line is high at the 9th clock cycle
NACK	Not-Acknowledge: SDA line stays high at the 9th clock cycle
RA	MPU-60X0 internal register address
DATA	Transmit or received data
P	Stop condition: SDA going from low to high while SCL is high

ADVANCE INFORMATION

9.5 SPI Interface (MPU-6000 only)

SPI is a 4-wire synchronous serial interface that uses two control lines and two data lines. The MPU-6000 always operates as a Slave device during standard Master-Slave SPI operation.

With respect to the Master, the Serial Clock output (SCLK), the Serial Data Output (SDO) and the Serial Data Input (SDI) are shared among the Slave devices. Each SPI slave device requires its own Chip Select (/CS) line from the master.

/CS goes low (active) at the start of transmission and goes back high (inactive) at the end. Only one /CS line is active at a time, ensuring that only one slave is selected at any given time. The /CS lines of the non-selected slave devices are held high, causing their SDO lines to remain in a high-impedance (high-z) state so that they do not interfere with any active devices.

SPI Operational Features

1. Data is delivered MSB first and LSB last
2. Data is latched on the rising edge of SCLK
3. Data should be transitioned on the falling edge of SCLK
4. The maximum frequency of SCLK is 1MHz
5. SPI read and write operations are completed in 16 or more clock cycles (two or more bytes). The first byte contains the SPI Address, and the following byte(s) contain(s) the SPI data. The first bit of the first byte contains the Read/Write bit and indicates the Read (1) or Write (0) operation. The following 7 bits contain the Register Address. In cases of multiple-byte Read/Writes, data is two or more bytes:

SPI Address format

MSB							**LSB**
R/W	A6	A5	A4	A3	A2	A1	A0

SPI Data format

MSB							**LSB**
D7	D6	D5	D4	D3	D2	D1	D0

6. Supports Single or Burst Read/Writes.

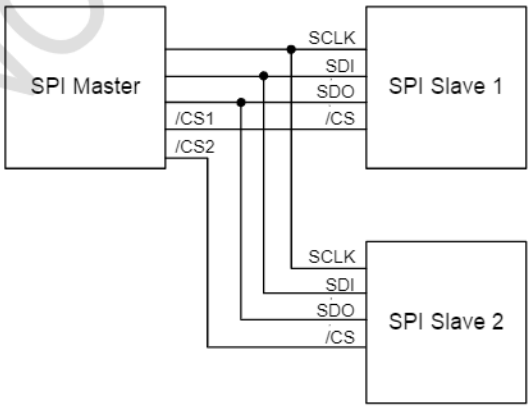

Typical SPI Master / Slave Configuration

ADVANCE INFORMATION

10 Serial Interface Considerations (MPU-6050)

10.1 MPU-6050 Supported Interfaces

The MPU-6050 supports I^2C communications on both its primary (microprocessor) serial interface and its auxiliary interface.

10.2 Logic Levels

The MPU-6050's I/O logic levels are set to be either VDD or VLOGIC, as shown in the table below.

I/O Logic Levels vs. *AUX_VDDIO*

AUX_VDDIO	**MICROPROCESSOR LOGIC LEVELS** (Pins: SDA, SCL, AD0, CLKIN, INT)	**AUXILLARY LOGIC LEVELS** (Pins: AUX_DA, AUX_CL)
0	VLOGIC	VLOGIC
1	VLOGIC	VDD

Note: The power-on-reset value for *AUX_VDDIO* is 0.

VLOGIC may be set to be equal to VDD or to another voltage. However, VLOGIC must be ≤ VDD at all times. When *AUX_VDDIO* is set to 0 (its power-on-reset value), VLOGIC is the power supply voltage for both the microprocessor system bus and the auxiliary I^2C bus, as shown in the figure of Section 10.3. When *AUX_VDDIO* is set to 1, VLOGIC is the power supply voltage for the microprocessor system bus and VDD is the supply for the auxiliary I^2C bus, as shown in the figure of Section 10.4.

ADVANCE INFORMATION

10.3 Logic Levels Diagram for AUX_*VDDIO* = 0

The figure below depicts a sample circuit with a third party magnetometer attached to the auxiliary I^2C bus. It shows logic levels and voltage connections for *AUX_VDDIO* = 0. Note: Actual configuration will depend on the auxiliary sensors used.

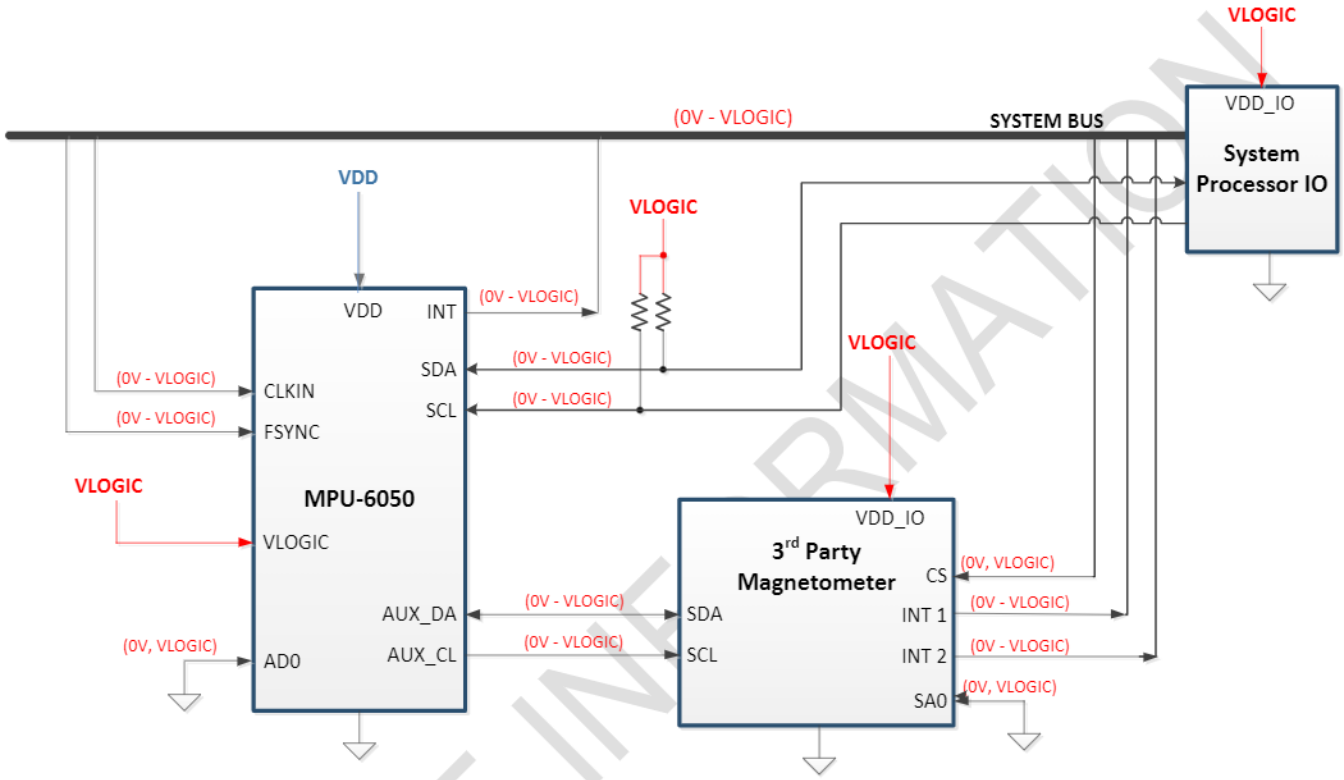

I/O Levels and Connections for *AUX_VDDIO* = 0

Notes:

1. AUX_VDDIO determines the IO voltage levels of AUX_DA and AUX_CL (0 = set output levels relative to VLOGIC)
2. CLKOUT is referenced to VDD.
3. All other MPU-6050 logic IOs are referenced to VLOGIC.

ADVANCE INFORMATION

10.4 Logic Levels Diagram for *AUX_VDDIO* = 1

The figure below depicts a sample circuit with a 3rd party magnetometer attached to the auxiliary I^2C bus. It shows logic levels and voltage connections for *AUX_VDDIO* = 1. This configuration is useful when the auxiliary sensor has only one supply for logic and power. Note: Actual configuration will depend on the auxiliary sensors used.

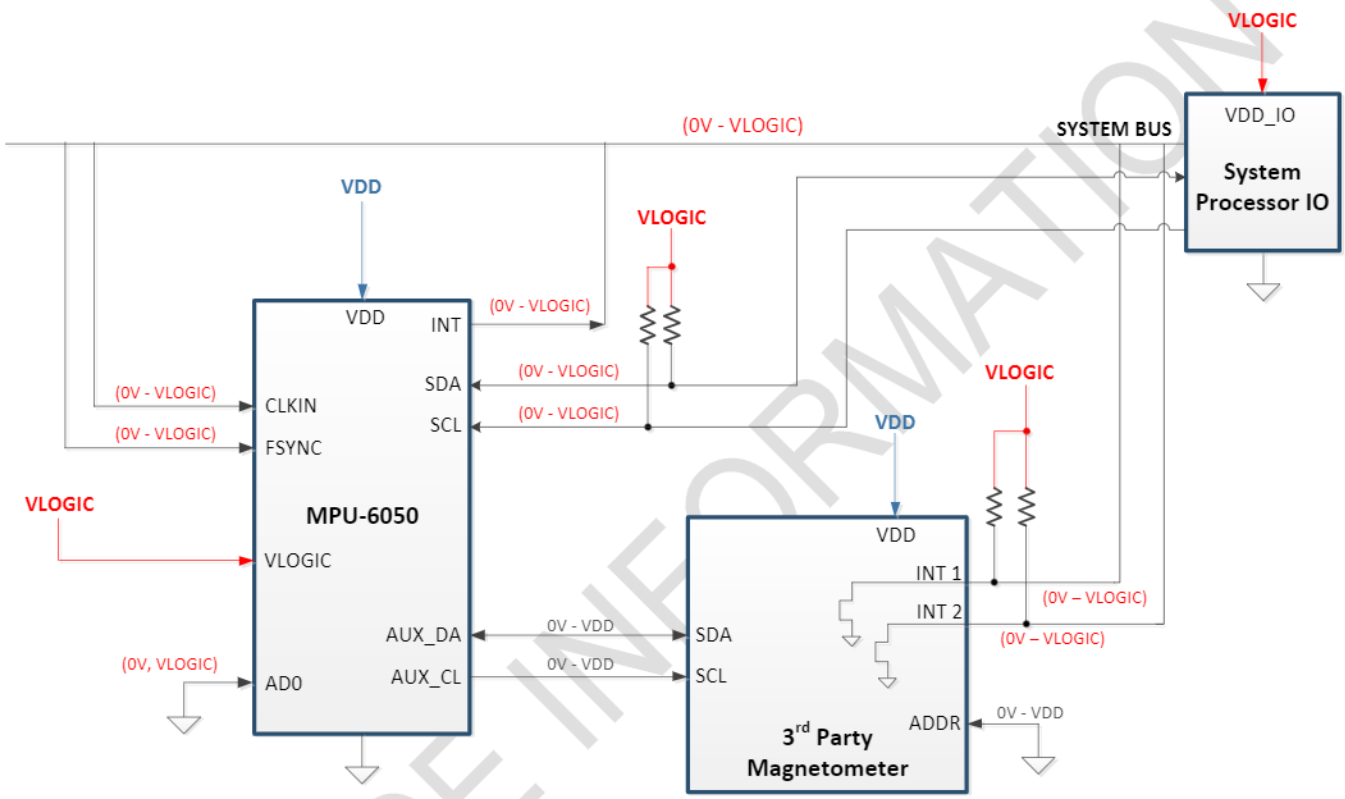

Voltage/ Configuration	Configuration 1	Configuration 2
VLOGIC	1.8V±5%	3.0V±5%
VDD	2.5V±5%	3.0V±5%
AUX_VDDIO	1	1

I/O Levels and Connections for Two Example Power Configurations (*AUX_VDDIO* = 1)

Notes:

1. *AUX_VDDIO* determines the IO voltage levels of AUX_DA and AUX_CL. *AUX_VDDIO* = 1 sets output levels relative to VDD.
2. 3rd-party auxiliary device logic levels are referenced to VDD. Setting INT1 and INT2 to open drain configuration provides voltage compatibility when VDD ≠ VLOGIC. When VDD = VLOGIC, INT1 and INT2 may be set to push-pull outputs, and external pull-up resistors are not needed.
3. CLKOUT is referenced to VDD.
4. All other MPU-6050 logic IOs are referenced to VLOGIC.

ADVANCE INFORMATION

11 Assembly

This section provides general guidelines for assembling InvenSense Micro Electro-Mechanical Systems (MEMS) gyros packaged in Quad Flat No leads package (QFN) surface mount integrated circuits.

11.1 Orientation of Axes

The diagram below shows the orientation of the axes of sensitivity and the polarity of rotation. Note the pin 1 identifier (•) in the figure.

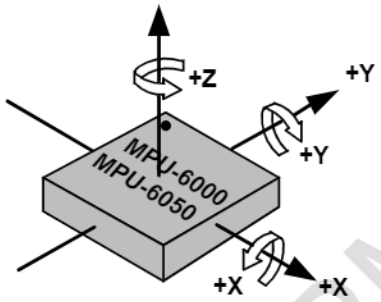

Orientation of Axes of Sensitivity and Polarity of Rotation

ADVANCE INFORMATION

11.2 Package Dimensions

24 Lead QFN (4x4x0.9) mm NiPdAu Lead-frame finish

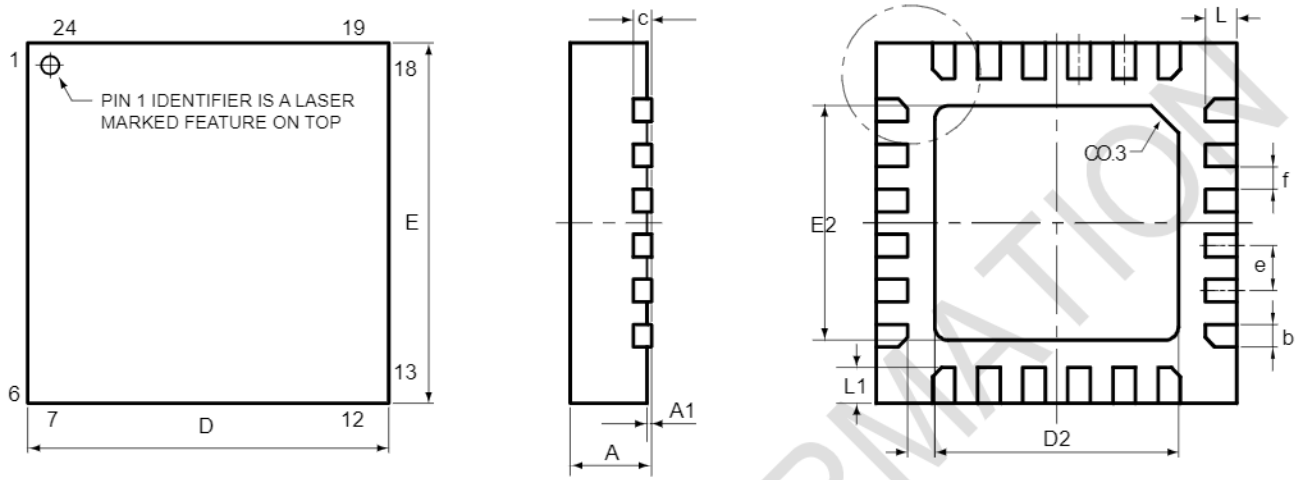

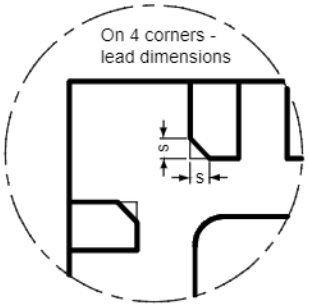

SYMBOLS	DIMENSIONS IN MILLIMETERS		
	MIN	NOM	MAX
A	0.85	0.90	0.95
A1	0.00	0.02	0.05
b	0.18	0.25	0.30
c	---	0.20 REF	---
D	3.90	4.00	4.10
D2	2.65	2.70	2.75
E	3.90	4.00	4.10
E2	2.55	2.60	2.65
e	---	0.50	---
f (e-b)	---	0.25	---
K	0.25	0.30	0.35
L	0.30	0.35	0.40
L1	0.35	0.40	0.45
s	0.05	---	0.15

ADVANCE INFORMATION

11.3 PCB Design Guidelines

The Pad Diagram using a JEDEC type extension with solder rising on the outer edge is shown below. The Pad Dimensions Table shows pad sizing (mean dimensions) recommended for the MPU-60X0 product.

JEDEC type extension with solder rising on outer edge

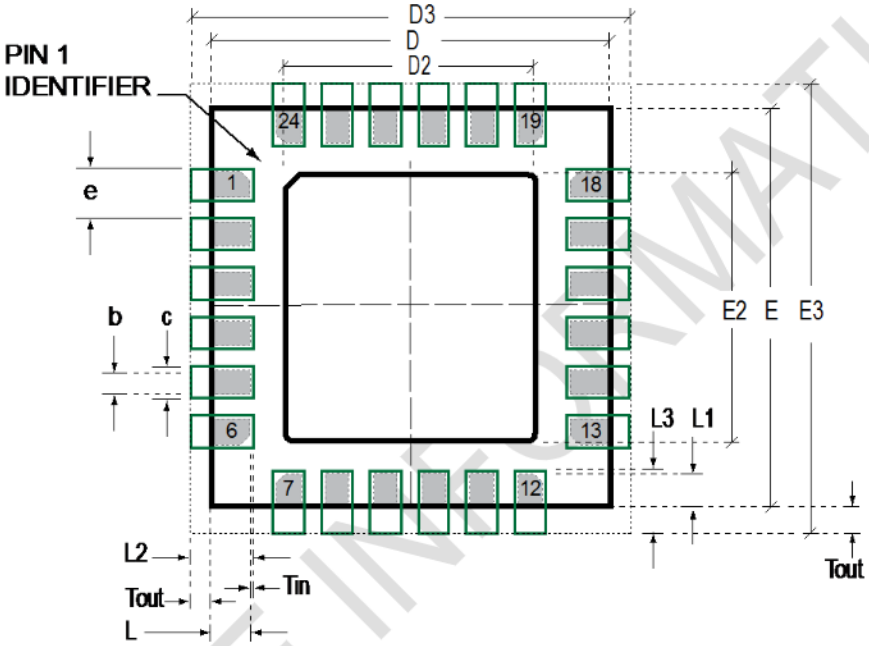

PCB Layout Diagram

SYMBOLS	DIMENSIONS IN MILLIMETERS	NOM
	Nominal Package I/O Pad Dimensions	
e	Pad Pitch	0.50
b	Pad Width	0.25
L	Pad Length	0.35
L1	Pad Length	0.40
D	Package Width	4.00
E	Package Length	4.00
D2	Exposed Pad Width	2.70
E2	Exposed Pad Length	2.60
	I/O Land Design Dimensions (Guidelines)	
D3	I/O Pad Extent Width	4.80
E3	I/O Pad Extent Length	4.80
c	Land Width	0.35
Tout	Outward Extension	0.40
Tin	Inward Extension	0.05
L2	Land Length	0.80
L3	Land Length	0.85

PCB Dimensions Table (for PCB Lay-out Diagram)

ADVANCE INFORMATION

11.4 Assembly Precautions

11.4.1 Gyroscope Surface Mount Guidelines

InvenSense MEMS Gyros sense rate of rotation. In addition, gyroscopes sense mechanical stress coming from the printed circuit board (PCB). This PCB stress can be minimized by adhering to certain design rules:

When using MEMS gyroscope components in plastic packages, PCB mounting and assembly can cause package stress. This package stress in turn can affect the output offset and its value over a wide range of temperatures. This stress is caused by the mismatch between the Coefficient of Linear Thermal Expansion (CTE) of the package material and the PCB. Care must be taken to avoid package stress due to mounting.

Traces connected to pads should be as symmetric as possible. Maximizing symmetry and balance for pad connection will help component self alignment and will lead to better control of solder paste reduction after reflow.

Any material used in the surface mount assembly process of the MEMS gyroscope should be free of restricted RoHS elements or compounds. Pb-free solders should be used for assembly.

11.4.2 Exposed Die Pad Precautions

The MPU-60X0 has very low active and standby current consumption. The exposed die pad is not required for heat sinking, and should not be soldered to the PCB. Failure to adhere to this rule can induce performance changes due to package thermo-mechanical stress. There is no electrical connection between the pad and the CMOS.

11.4.3 Trace Routing

Routing traces or vias under the gyro package such that they run under the exposed die pad is prohibited. Routed active signals may harmonically couple with the gyro MEMS devices, compromising gyro response. These devices are designed with the drive frequencies as follows: X = 33±3Khz, Y = 30±3Khz, and Z=27±3Khz. To avoid harmonic coupling don't route active signals in non-shielded signal planes directly below, or above the gyro package. Note: For best performance, design a ground plane under the e-pad to reduce PCB signal noise from the board on which the gyro device is mounted. If the gyro device is stacked under an adjacent PCB board, design a ground plane directly above the gyro device to shield active signals from the adjacent PCB board.

11.4.4 Component Placement

Do not place large insertion components such as keyboard or similar buttons, connectors, or shielding boxes at a distance of less than 6 mm from the MEMS gyro. Maintain generally accepted industry design practices for component placement near the MPU-60X0 to prevent noise coupling and thermo-mechanical stress.

11.4.5 PCB Mounting and Cross-Axis Sensitivity

Orientation errors of the gyroscope and accelerometer mounted to the printed circuit board can cause cross-axis sensitivity in which one gyro or accel responds to rotation or acceleration about another axis, respectively. For example, the X-axis gyroscope may respond to rotation about the Y or Z axes. The orientation mounting errors are illustrated in the figure below.

ADVANCE INFORMATION

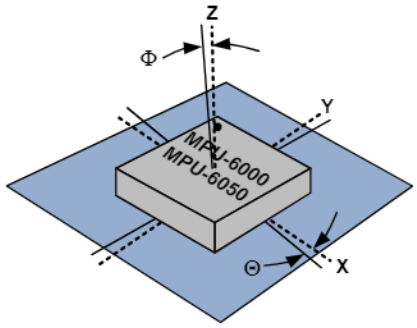

Package Gyro & Accel Axes (– – –) Relative to PCB Axes (——) with Orientation Errors (Θ and Φ)

The table below shows the cross-axis sensitivity as a percentage of the gyroscope or accelerometer's sensitivity for a given orientation error, respectively.

Cross-Axis Sensitivity vs. Orientation Error

Orientation Error (θ or Φ)	Cross-Axis Sensitivity (sinθ or sinΦ)
0°	0%
0.5°	0.87%
1°	1.75%

The specifications for cross-axis sensitivity in Section 6.1 and Section 6.2 include the effect of the die orientation error with respect to the package.

11.4.6 MEMS Handling Instructions

MEMS (Micro Electro-Mechanical Systems) are a time-proven, robust technology used in hundreds of millions of consumer, automotive and industrial products. MEMS devices consist of microscopic moving mechanical structures. They differ from conventional IC products, even though they can be found in similar packages. Therefore, MEMS devices require different handling precautions than conventional ICs prior to mounting onto printed circuit boards (PCBs).

The MPU-60X0 has been qualified to a shock tolerance of 10,000*g*. InvenSense packages its gyroscopes as it deems proper for protection against normal handling and shipping. It recommends the following handling precautions to prevent potential damage.

- Do not drop individually packaged gyroscopes, or trays of gyroscopes onto hard surfaces. Components placed in trays could be subject to *g*-forces in excess of 10,000*g* if dropped.
- Printed circuit boards that incorporate mounted gyroscopes should not be separated by manually snapping apart. This could also create *g*-forces in excess of 10,000*g*.
- Do not clean MEMS gyroscopes in ultrasonic baths. Ultrasonic baths can induce MEMS damage if the bath energy causes excessive drive motion through resonant frequency coupling.

11.4.7 ESD Considerations

Establish and use ESD-safe handling precautions when unpacking and handling ESD-sensitive devices.

ADVANCE INFORMATION

- Store ESD sensitive devices in ESD safe containers until ready for use. The Tape-and-Reel moisture-sealed bag is an ESD approved barrier. The best practice is to keep the units in the original moisture sealed bags until ready for assembly.

Restrict all device handling to ESD protected work areas that measure less than 200V static charge. Ensure that all workstations and personnel are properly grounded to prevent ESD.

11.4.8 Reflow Specification

Qualification Reflow: The MPU-60X0 was qualified in accordance with IPC/JEDEC J-STD-020D.01. This standard classifies proper packaging, storage and handling in order to avoid subsequent thermal and mechanical damage during the solder reflow attachment phase of PCB assembly.

The qualification preconditioning process specifies a sequence consisting of a bake cycle, a moisture soak cycle (in a temperature humidity oven), and three consecutive solder reflow cycles, followed by functional device testing.

The peak solder reflow classification temperature requirement for package qualification is (260 +5/-0°C) for lead-free soldering of components measuring less than 1.6 mm in thickness. The qualification profile and a table explaining the set-points are shown below:

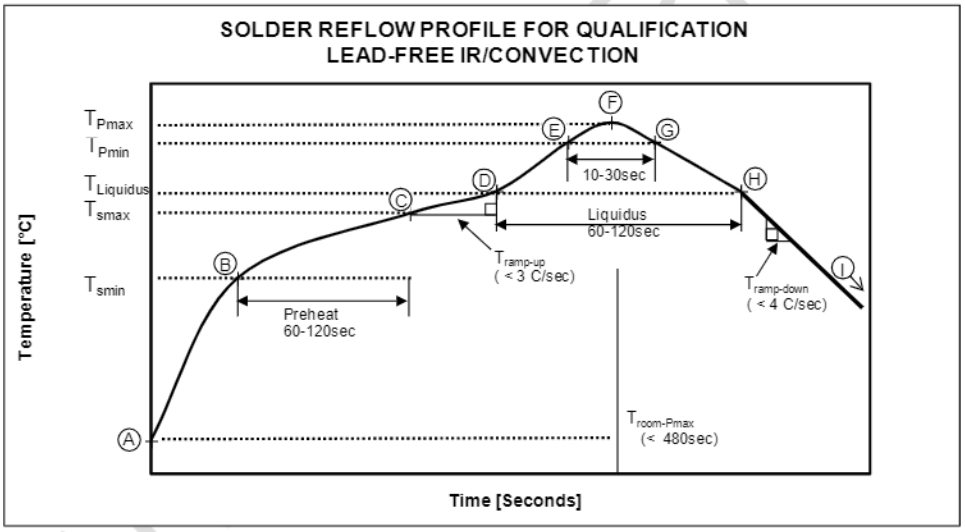

ADVANCE INFORMATION

Temperature Set Points Corresponding to Reflow Profile Above

Step	Setting	CONSTRAINTS		
		Temp (°C)	Time (sec)	Max. Rate (°C/sec)
A	T_{room}	25		
B	T_{Smin}	150		
C	T_{Smax}	200	$60 < t_{BC} < 120$	
D	$T_{Liquidus}$	217		$r_{(TLiquidus-TPmax)} < 3$
E	T_{Pmin} [255°C, 260°C]	255		$r_{(TLiquidus-TPmax)} < 3$
F	T_{Pmax} [260°C, 265°C]	260	$t_{AF} < 480$	$r_{(TLiquidus-TPmax)} < 3$
G	T_{Pmin} [255°C, 260°C]	255	$10 < t_{EG} < 30$	$r_{(TPmax-TLiquidus)} < 4$
H	$T_{Liquidus}$	217	$60 < t_{DH} < 120$	
I	T_{room}	25		

Notes: Customers must never exceed the Classification temperature (T_{Pmax} = 260°C).
All temperatures refer to the topside of the QFN package, as measured on the package body surface.

Production Reflow: Check the recommendations of your solder manufacturer. For optimum results, use lead-free solders that have lower specified temperature profiles (Tp_{max} ~ 235°C). Also use lower ramp-up and ramp-down rates than those used in the qualification profile. Never exceed the maximum conditions that we used for qualification, as these represent the maximum tolerable ratings for the device.

11.5 Storage Specifications

The storage specification of the MPU-60X0 conforms to IPC/JEDEC J-STD-020D.01 Moisture Sensitivity Level (MSL) 3.

Calculated shelf-life in moisture-sealed bag	12 months -- Storage conditions: <40°C and <90% RH
After opening moisture-sealed bag	168 hours -- Storage conditions: ambient ≤30°C at 60%RH

11.6 Package Marking Specification

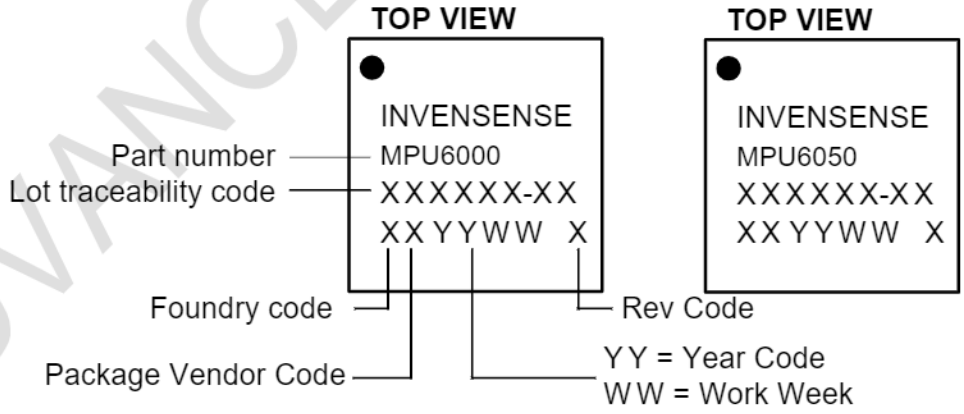

Package Marking Specification

ADVANCE INFORMATION

11.7 Tape & Reel Specification

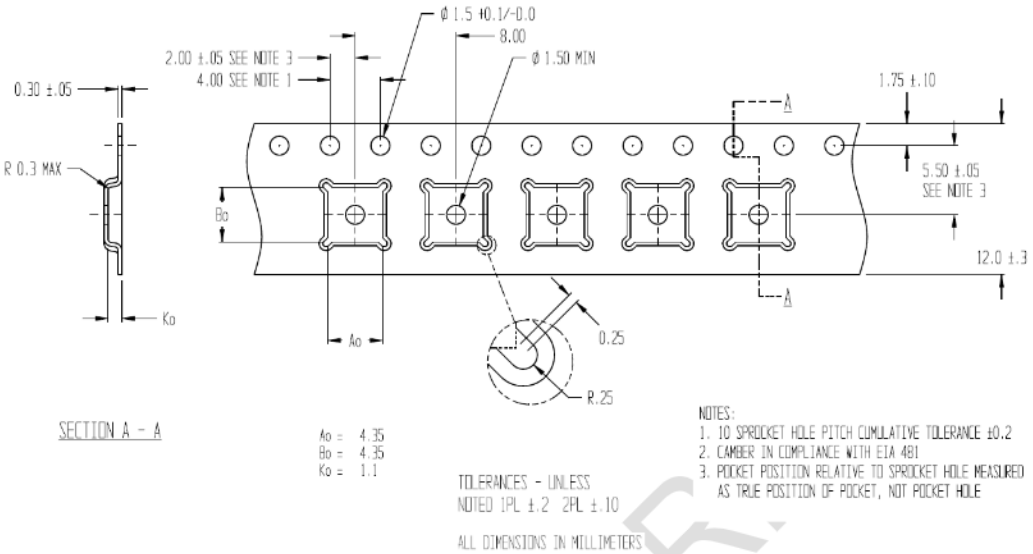

Tape Dimensions

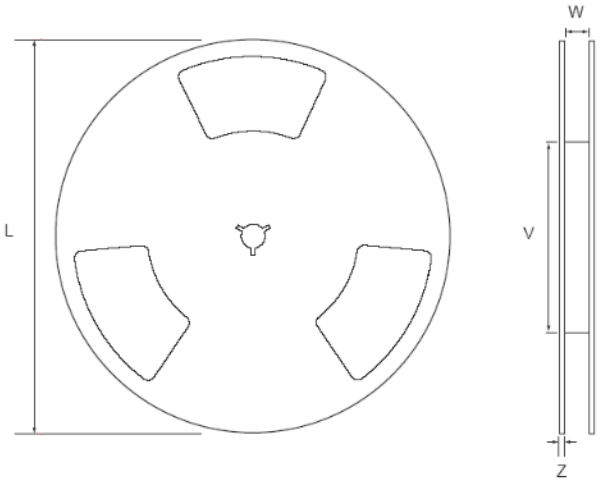

Reel Outline Drawing

Reel Dimensions and Package Size

PACKAGE SIZE	REEL (mm)			
	L	V	W	Z
4x4	330	100	13.2	2.2

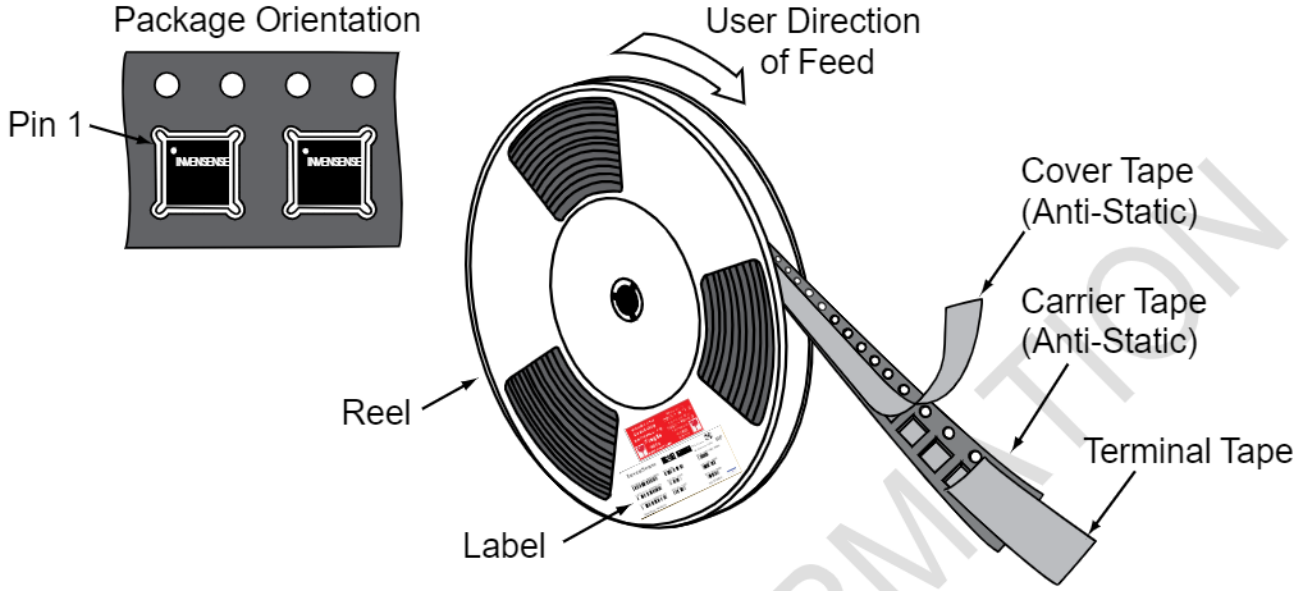

Tape and Reel Specification

Reel Specifications

Quantity Per Reel	5,000
Reels per Box	1
Boxes Per Carton (max)	5
Pcs/Carton (max)	25,000

11.8 Label

Barcode Label

Location of Label on Reel

ADVANCE INFORMATION

11.9 Packaging

REEL – with Barcode & Caution labels

Vacuum-Sealed Moisture Barrier Bag with ESD, MSL3, Caution, and Barcode Labels

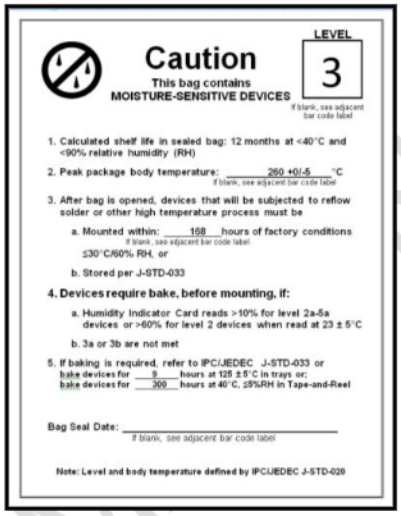

Caution

This bag contains MOISTURE-SENSITIVE DEVICES

LEVEL 3

If blank, see adjacent bar code label

1. Calculated shelf life in sealed bag: 12 months at <40°C and <90% relative humidity (RH)
2. Peak package body temperature: 260 +0/-5 °C
   If blank, see adjacent bar code label
3. After bag is opened, devices that will be subjected to reflow solder or other high temperature process must be
   a. Mounted within: 168 hours of factory conditions
      If blank, see adjacent bar code label
      ≤30°C/60% RH, or
   b. Stored per J-STD-033
4. Devices require bake, before mounting, if:
   a. Humidity Indicator Card reads >10% for level 2a-5a devices or >60% for level 2 devices when read at 23 ± 5°C
   b. 3a or 3b are not met
5. If baking is required, refer to IPC/JEDEC J-STD-033 or bake devices for 9 hours at 125 ±5°C in trays or; bake devices for 300 hours at 40°C, ≤5%RH in Tape-and-Reel

Bag Seal Date: _____
If blank, see adjacent bar code label

Note: Level and body temperature defined by IPC/JEDEC J-STD-020

MSL3 Label

Caution Label

ESD Label

Inner Bubble Wrap

Pizza Box

Pizza Boxes Placed in Foam-Lined Shipper Box

Outer Shipper Label

11.10 Representative Shipping Carton Label

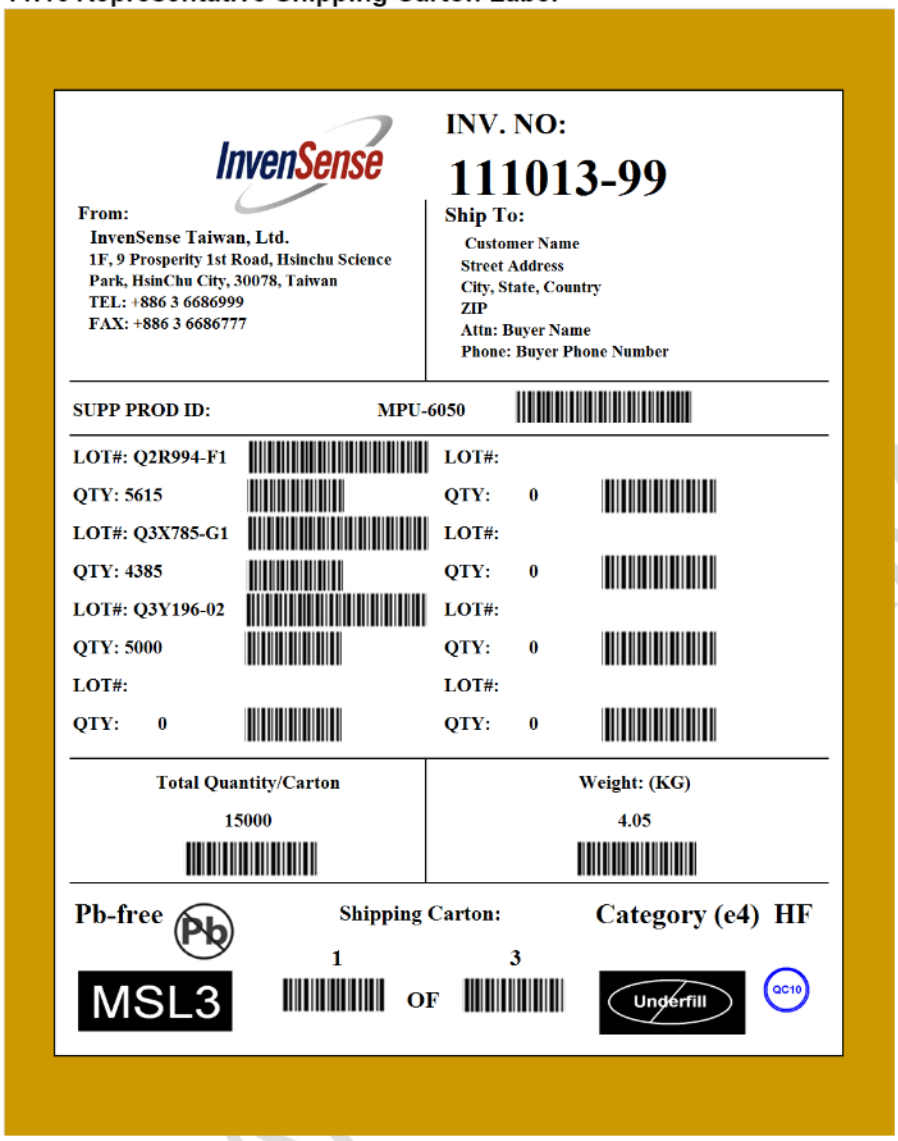

ADVANCE INFORMATION

12 Reliability

12.1 Qualification Test Policy

InvenSense's products complete a Qualification Test Plan before being released to production. The Qualification Test Plan for the MPU-60X0 followed the JESD 47H.01 Standards, "Stress-Test-Driven Qualification of Integrated Circuits," with the individual tests described below.

12.2 Qualification Test Plan

Accelerated Life Tests

TEST	Method/Condition	Lot Quantity	Sample / Lot	Acc / Reject Criteria
(HTOL/LFR) High Temperature Operating Life	JEDEC JESD22-A108D, Dynamic, 3.63V biased, Tj>125°C [read-points 168, 500, 1000 hours]	3	77	(0/1)
(HAST) Highly Accelerated Stress Test (1)	JEDEC JESD22-A118A Condition A, 130°C, 85%RH, 33.3 psia., unbiased, [read-point 96 hours]	3	77	(0/1)
(HTS) High Temperature Storage Life	JEDEC JESD22-A103D, Cond. A, 125°C Non-Bias Bake [read-points 168, 500, 1000 hours]	3	77	(0/1)

Device Component Level Tests

TEST	Method/Condition	Lot Quantity	Sample / Lot	Acc / Reject Criteria
(ESD-HBM) ESD-Human Body Model	JEDEC JS-001-2010, (1.5KV)	1	3	(0/1)
(ESD-MM) ESD-Machine Model	JEDEC JESD22-A115C, (200V)	1	3	(0/1)
(LU) Latch Up	JEDEC JESD-78D Class II (2), 125°C; ±100mA	1	6	(0/1)
(MS) Mechanical Shock	JEDEC JESD22-B104C, Mil-Std-883, Method 2002.5, Cond. E, 10,000*g's*, 0.2ms, ±X, Y, Z – 6 directions, 5 times/direction	3	5	(0/1)
(VIB) Vibration	JEDEC JESD22-B103B, Variable Frequency (random), Cond. B, 5-500Hz, X, Y, Z – 4 times/direction	3	5	(0/1)
(TC) Temperature Cycling (1)	JEDEC JESD22-A104D Condition N [-40°C to +85°C], Soak Mode 2 [5'], 100 cycles	3	77	(0/1)

Board Level Tests

TEST	Method/Condition	Lot Quantity	Sample / Lot	Acc / Reject Criteria
(BMS) Board Mechanical Shock	JEDEC JESD22-B104C,Mil-Std-883, Method 2002.5, Cond. E, 10000*g's*, 0.2ms, +-X, Y, Z – 6 directions, 5 times/direction	1	5	(0/1)
(BTC) Board Temperature Cycling (1)	JEDEC JESD22-A104D Condition N [-40°C to +85°C], Soak mode 2 [5'], 100 cycles	1	40	(0/1)

(1) Tests are preceded by MSL3 Preconditioning in accordance with JEDEC JESD22-A113F

ADVANCE INFORMATION

13 Environmental Compliance

The MPU-6000/MPU-6050 is RoHS and Green compliant.

The MPU-6000/MPU-6050 is in full environmental compliance as evidenced in report HS-MPU-6000, Materials Declaration Data Sheet.

Environmental Declaration Disclaimer:

InvenSense believes this environmental information to be correct but cannot guarantee accuracy or completeness. Conformity documents for the above component constitutes are on file. InvenSense subcontracts manufacturing and the information contained herein is based on data received from vendors and suppliers, which has not been validated by InvenSense.

ADVANCE INFORMATION

This information furnished by InvenSense is believed to be accurate and reliable. However, no responsibility is assumed by InvenSense for its use, or for any infringements of patents or other rights of third parties that may result from its use. Specifications are subject to change without notice. InvenSense reserves the right to make changes to this product, including its circuits and software, in order to improve its design and/or performance, without prior notice. InvenSense makes no warranties, neither expressed nor implied, regarding the information and specifications contained in this document. InvenSense assumes no responsibility for any claims or damages arising from information contained in this document, or from the use of products and services detailed therein. This includes, but is not limited to, claims or damages based on the infringement of patents, copyrights, mask work and/or other intellectual property rights.

Certain intellectual property owned by InvenSense and described in this document is patent protected. No license is granted by implication or otherwise under any patent or patent rights of InvenSense. This publication supersedes and replaces all information previously supplied. Trademarks that are registered trademarks are the property of their respective companies. InvenSense sensors should not be used or sold in the development, storage, production or utilization of any conventional or mass-destructive weapons or for any other weapons or life threatening applications, as well as in any other life critical applications such as medical equipment, transportation, aerospace and nuclear instruments, undersea equipment, power plant equipment, disaster prevention and crime prevention equipment.

InvenSense® is a registered trademark of InvenSense, Inc. MPU™, MPU-6000™, MPU-6050™, MPU-60X0™, Digital Motion Processor™, DMP ™, Motion Processing Unit™, MotionFusion™, MotionInterface™, MotionTracking™, and MotionApps™ are trademarks of InvenSense, Inc.

©2011 InvenSense, Inc. All rights reserved.