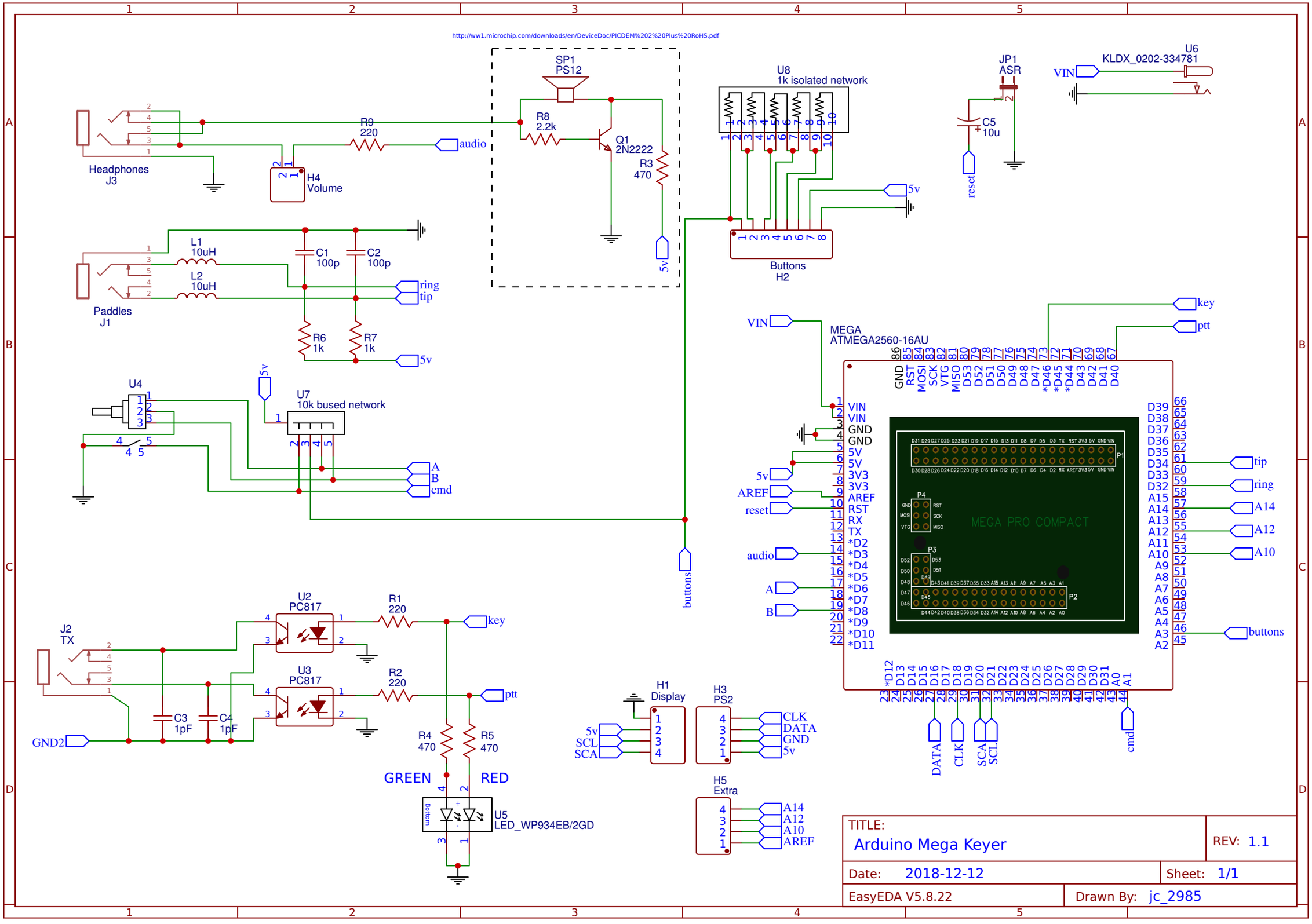
http://ww1.microchip.com/downloads/en/DeviceDoc/PICDEM%202%20Plus%20RoHS.pdf
Headphones
J3
H4
Volume
R9
220
audio
SP1
PS12
R8
2.2k
Q1
2N2222
R3
470
5v
U8
1k isolated network
Buttons
H2
JP1
ASR
C5
10u
reset
U6
KLDX_0202-334781
VIN
Paddles
J1
L1
10uH
L2
10uH
C1
100p
C2
100p
ring
tip
R6
1k
R7
1k
U4
U7
10k bused network
A
B
cmd
MEGA
ATMEGA2560-16AU
key
ptt
tip
ring
A14
A12
A10
buttons
AREF
audio
MEGA PRO COMPACT
J2
TX
GND2
C3
1pF
C4
1pF
U2
PC817
U3
PC817
R1
220
R2
220
R4
470
R5
470
GREEN
RED
U5
LED_WP934EB/2GD
H1
Display
SCL
SCA
H3
PS2
CLK
DATA
GND
H5
Extra
DATA
CLK
SCA
SCL
cmd
TITLE:
Arduino Mega Keyer
REV: 1.1
Date: 2018-12-12
Sheet: 1/1
EasyEDA V5.8.22
Drawn By: jc_2985