Conventional Model Inversion for unimodal DNNs

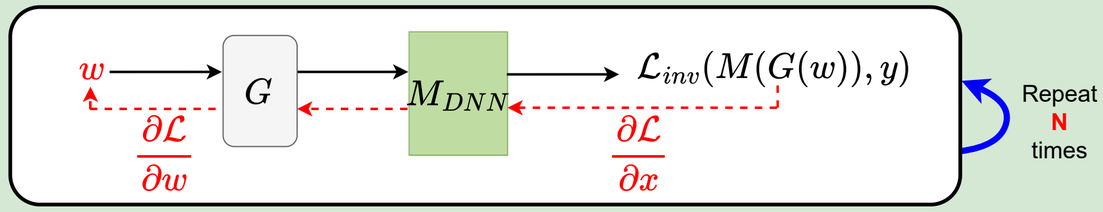

(A) Our Model Inversion strategies for VLMs

Token-based Model Inversion (TMI)

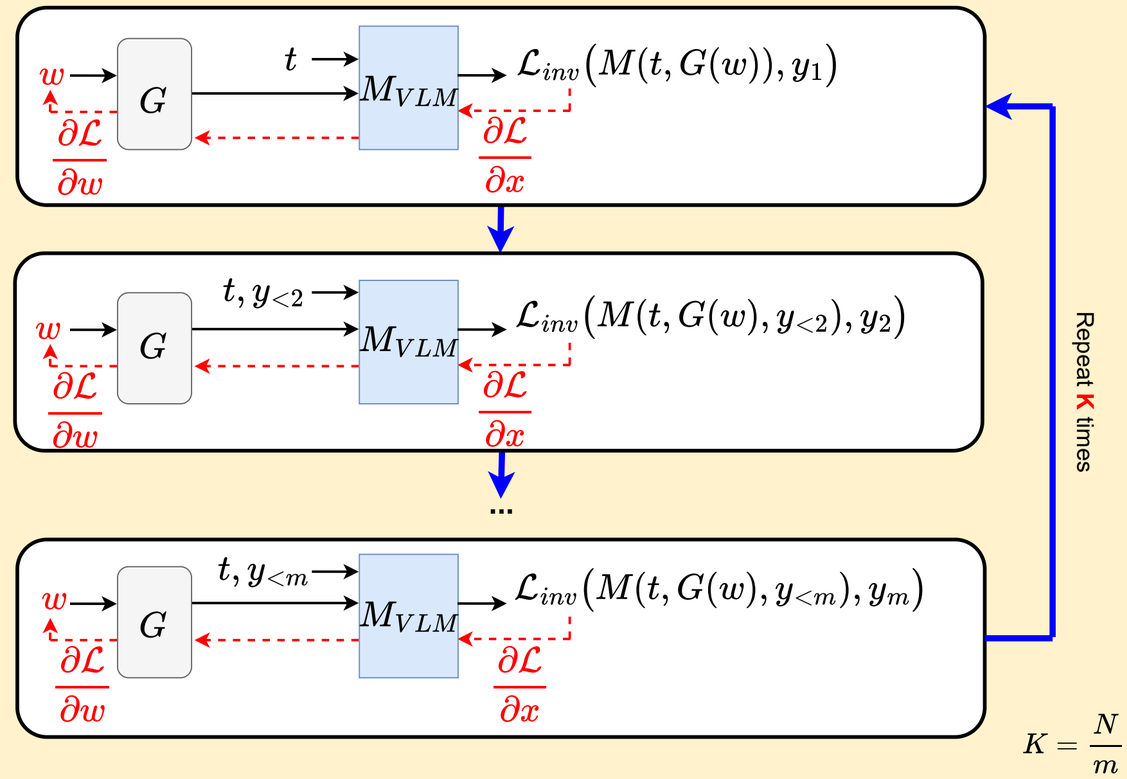

Convergent Token-based Model Inversion (TMI-C)

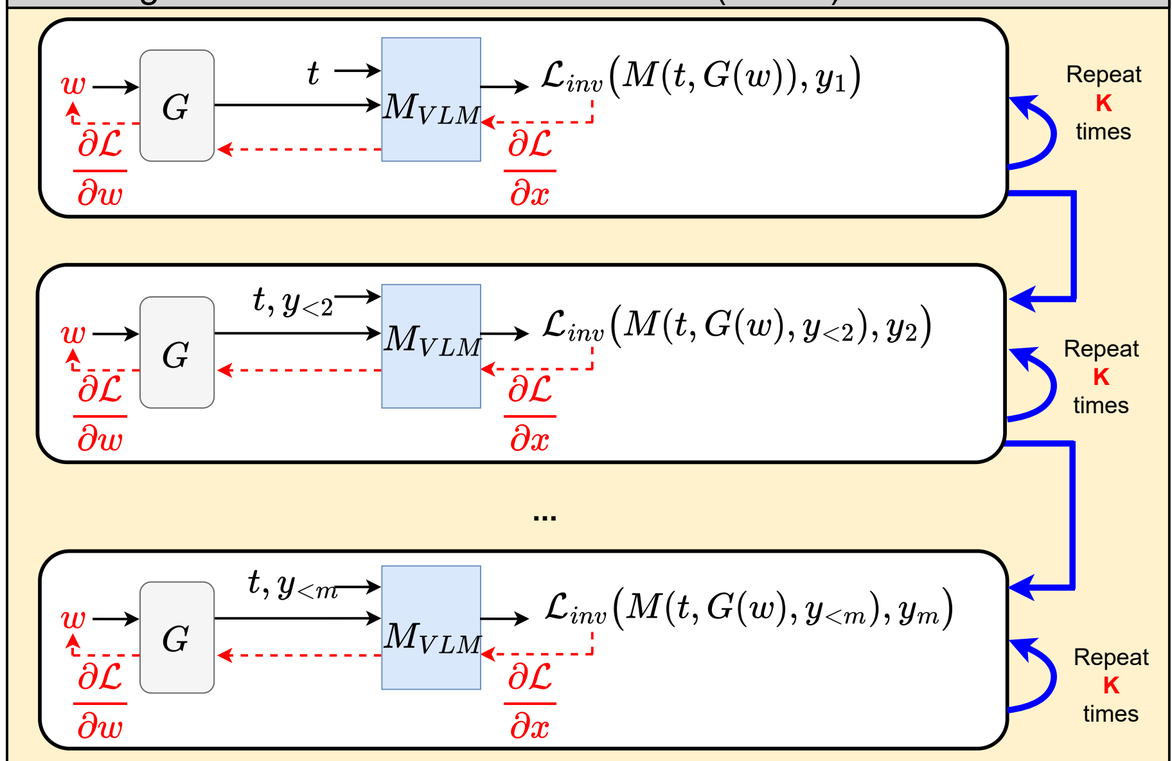

(B) Sequence-based Model Inversion with Adaptive Token Weighting (SMI-AW)

Analysis of Visual Attention Map

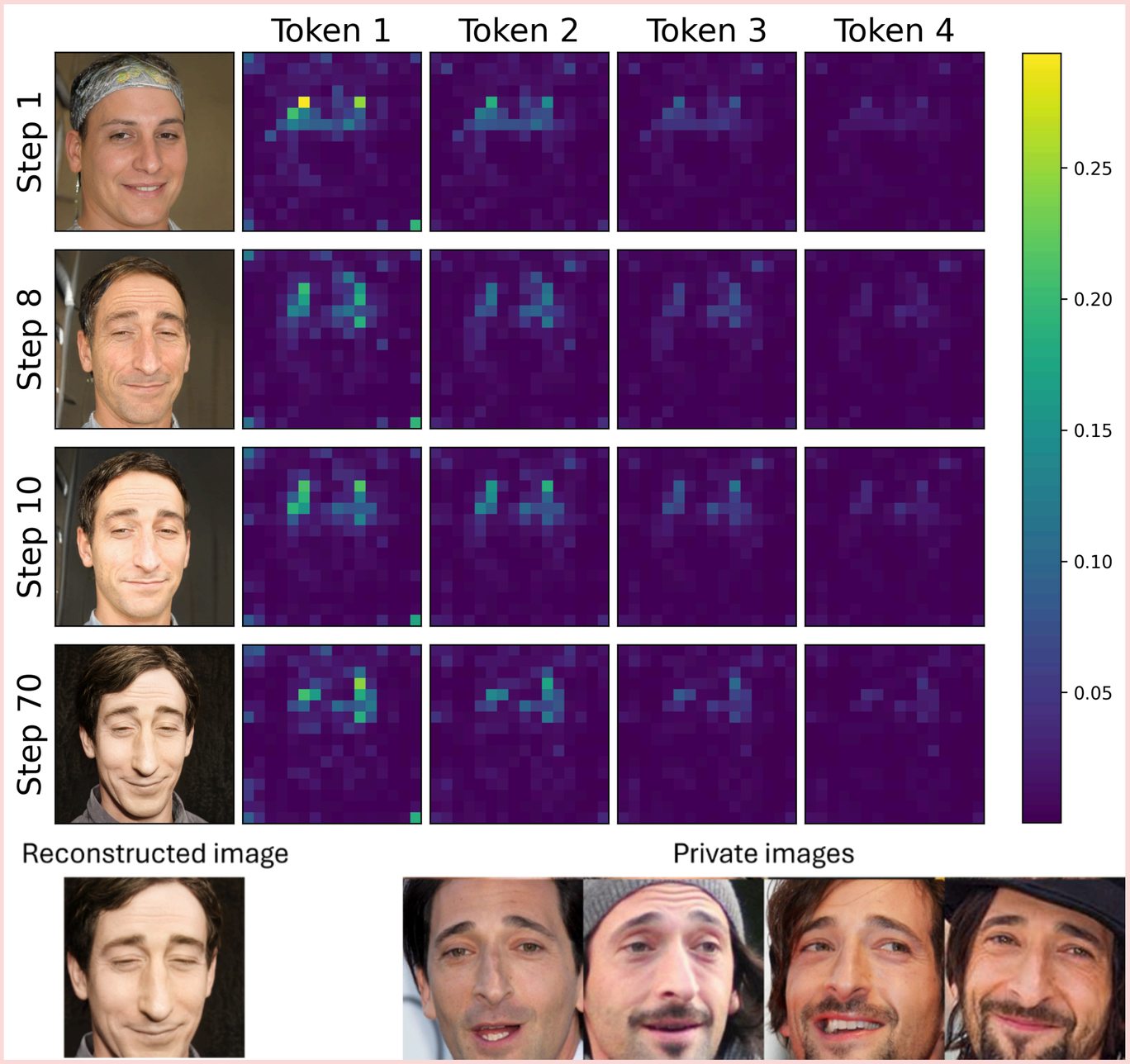

Adaptive Token Weighting via Visual Attention

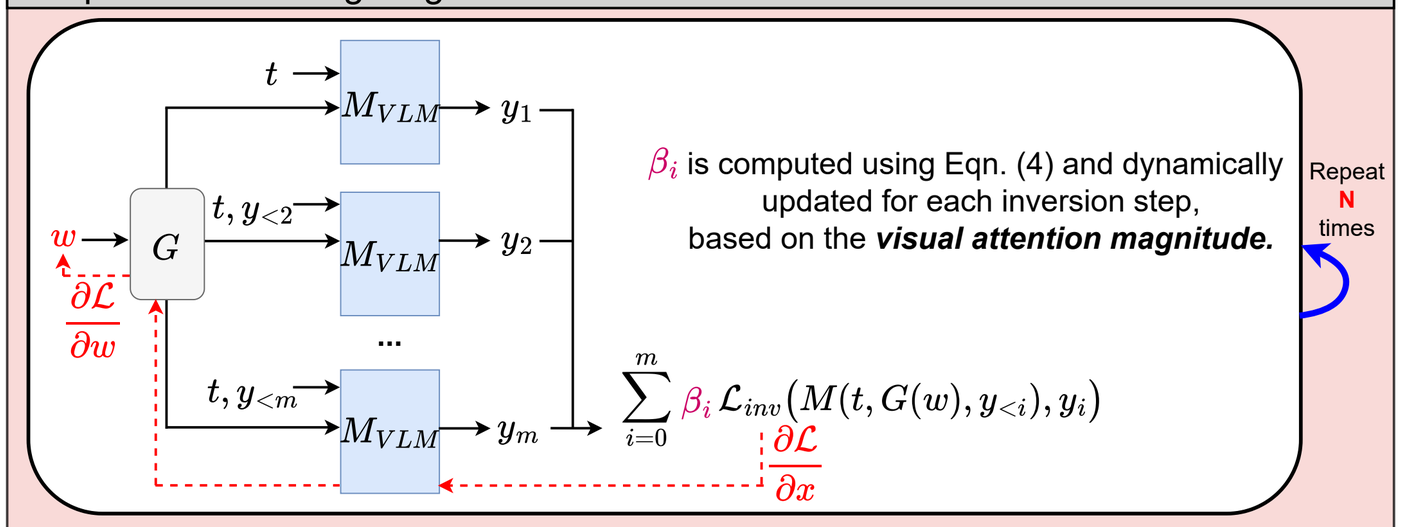
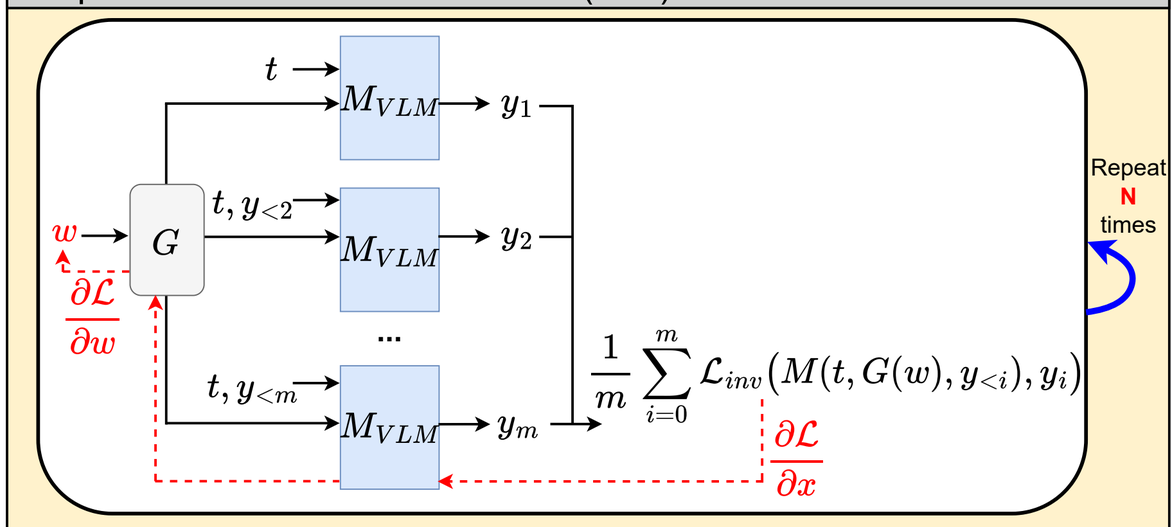
Sequence-based Model Inversion (SMI)