CubeSat Communications Board

70 cm BPSK TX / 2m AFSK RX

Project: CentiSat CubeSat -- Senior Capstone Design

Board: Communications Subsystem, Single PCB

Designer: Nick Grabbs / KI5YNG

Revsion: 0.2
Date: 03/13/2026

Repsoitory: centisat/hardware/comms

System Block Diagram

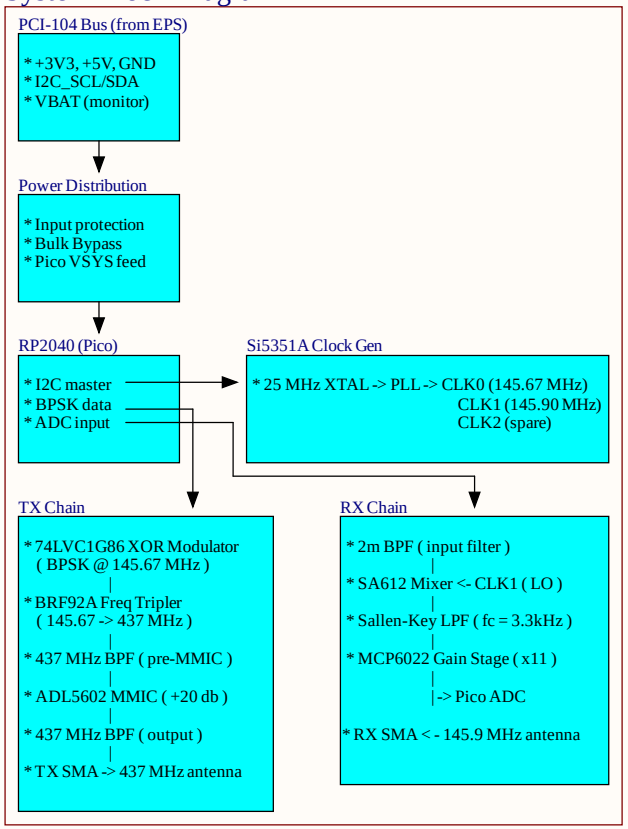

Sheet Index

Sheet	Title	Contents
1	Overview	This sheet — block diagram, design notes
2	Clock Gen	Si5351A, 25 MHz crystal, I2C, clock outputs
3	TX Chain	XOR modulator, tripler, BPF, ADL5602 MMIC
4	RX Chain	SA612 mixer, Sallen-Key LPF, MCP6022 gain
5	Digital Control	RP2040 (Pico module), GPIOs, USB
6	Power	Distribution, protection, bypass
7	Connectors	PCI-104 bus, SMA ports, test points

Power Rail Summary

Power Rails

Rail	Source	Voltage	Consumers
+3V3	EPS via PCI-104 (a1, a2)	3.3V ±2%	RP2040, Si5351A, 74LVC1G86, MCP6022
+5V	EPS via PCI-104 (a4, a5)	5.0V ±2%	SA612, ADL5602, tripler bias, Pico VSYS
GND	EPS via PCI-104 (a3, a6, a8, a12)	0V	All
VBAT	EPS via PCI-104 (a7)	6.0–8.4V	Monitor only (not used for power)

Estimated current budget: +3V3: ~150 mA (RP2040 ~50mA, Si5351A ~30mA, logic ~10mA, op-amp ~10mA) +5V: ~80 mA (SA612 ~3mA, ADL5602 ~60mA, tripler ~5mA, Pico VSYS ~10mA) Total: <250 mA — well within EPS TPS62933F capacity (3A per rail)

Net Name Convention

Power rails use **power port symbols** (global across all sheets). Signal nets use **net labels** (also global in flat design).

Net	Type	Description
+3V3, +5V, GND, VBAT	Power port	Supply rails (global)
I2C_SDA, I2C_SCL	Net label	I2C bus (Si5351A + FC bus)
CLK0_OUT, CLK1_OUT	Net label	Si5351A clock outputs
BPSK_DATA	Net label	RP2040 → XOR modulator

5

Net	Type	Description
TX_OUT, RX_IN	Net label	RF paths to SMA connectors
RX_BASEBAND	Net label	MCP6022 output → Pico ADC

Key Design Notes

1. Power from EPS via PCI-104 bus — no on-board regulators
2. BPSK modulation at 145.67 MHz (before tripler) — 74LVC1G86 fails at 437 MHz, see overview.md timing analysis
3. Odd-order frequency multiplication preserves BPSK phase states ($3 \times 180° = 540° \equiv 180° \bmod 360°$)
4. Tripler bias 47kΩ — empirically optimized (-7.4 dBm @ 437 MHz)
5. All RF filter caps must be C0G/NP0 (not X7R)
6. I2C addresses: Si5351A = 0x60, EPS LTC4162 = 0x68 (no conflict)
7. Flat schematic design — nets connect by name across sheets
8. Prototype uses Pico module; bare RP2040 deferred to v2

Title: CubeSat Comms -- Overview		
Size: A3	Number	Revision: A
Date: 4/14/2026		Sheet 1 of 7
File: C:\Users\..\Overview.SchDoc		Drawn By: Nick Grabbs - KI5YNG

CLOCK GENERATOR

CLOCK GENERATOR -- Si5351A (I2C address 0x60). Generates three independent clock outputs from a single 25 MHz crystal. CLK0 = 145.67 MHz (TX carrier, tripled to 437 MHz). CLK1 = 145.9 MHz (RX local oscillator for SA612 mixer). CLK2 = spare. All outputs driven at 8 mA (max) intio 50Ohm loads. Controlled by RP2040 over I2C.

Si5351A IC

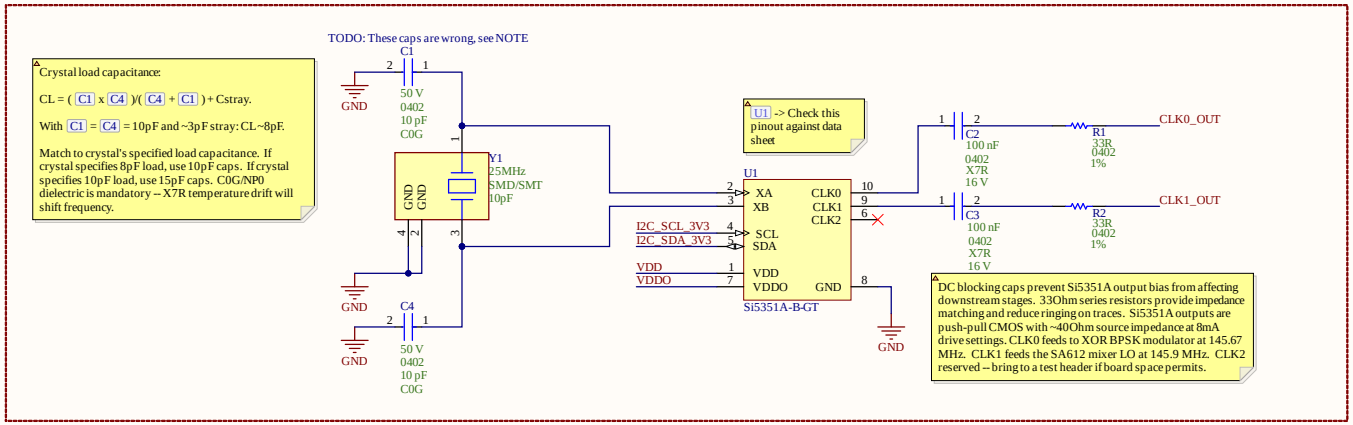

I2C Pull-Up Resistors

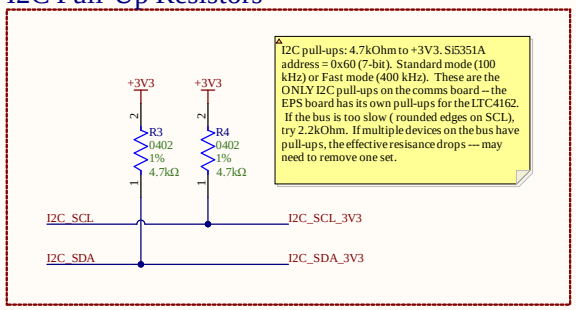

Bypass Capacitors

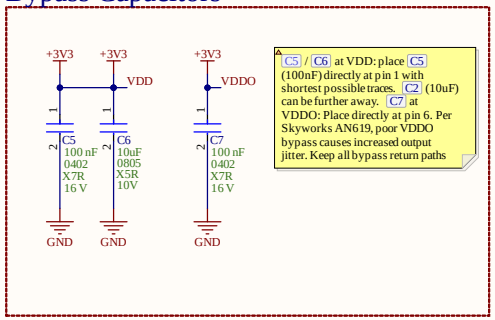

Title	CubeSat Comms -- Clock Generator	
Size A3	Number	Revision A
Date: 4/14/2026		Sheet 2of 7
File: C:\Users\..\Clock Gen.SchDoc		Drawn By: Nick Grabbs - KI5YNG

TX CHAIN

TX CHAIN - 437 MHz BPSK downlink transmitter. The carrier from the Si5351A (145.67 MHz) is BPSK-modulated by the 74LVC1G86 XOR gate, then frequency-tripled to 437 MHz by a class-C biased BFR92A transistor. A 3-pole LC BPF selects the 3rd harmonic and rejects the fundamental and 2nd harmonic. The ADL5602 MMIC provides ~20 dB gain to bring the signal to ~+10 dBm output. BPSK phase states are preserved through odd-order multiplication: 3 x 180* = 540* = 180*

BPSK Modulator - 74LVC1G86 (SOT-23-5)

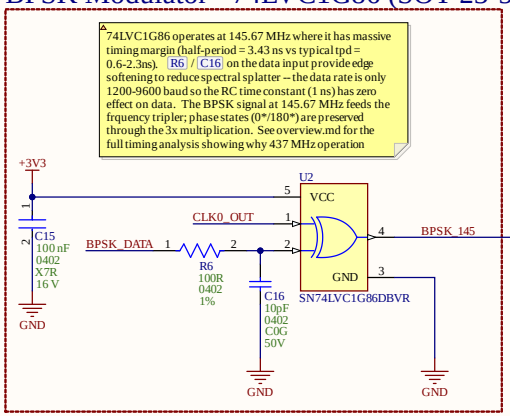

Frequency Tripler - BRF92A (SOT-23)

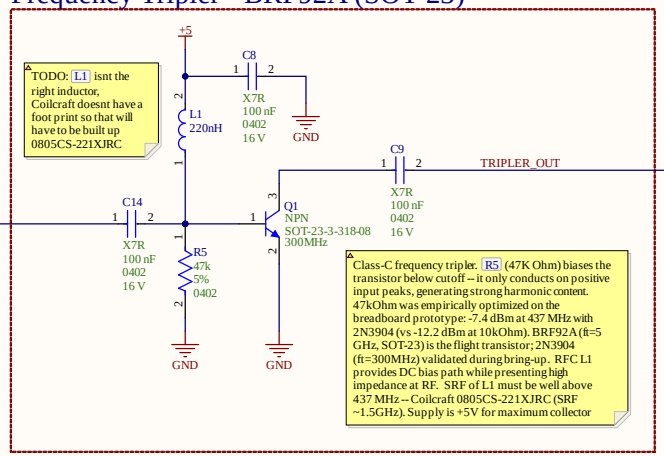

437 MHz Band-Pass Filter

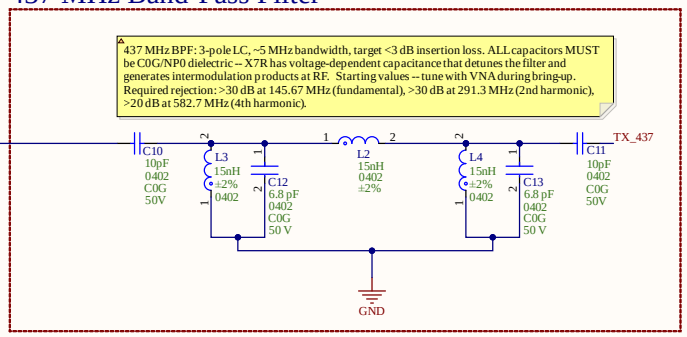

MMIC Amplifier

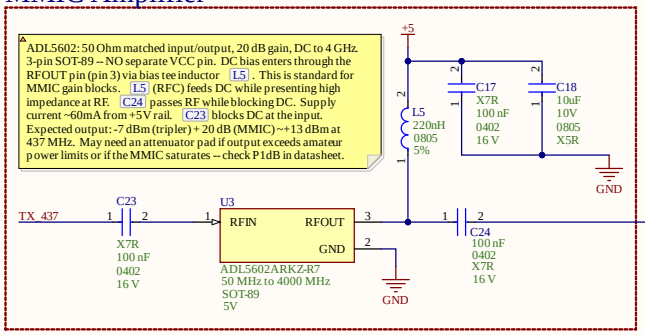

Output Band-Pass Filter

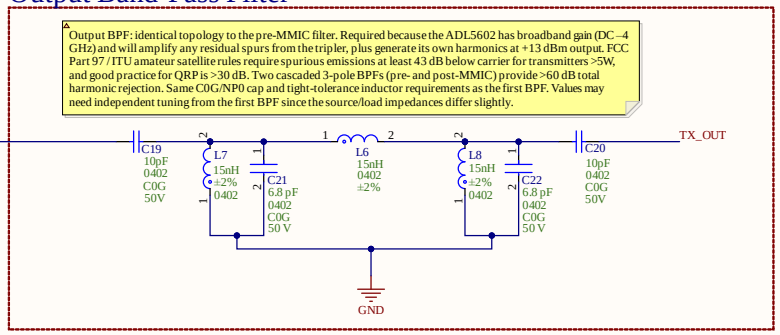

Title: CubeSat Comms -- TX Chain		
Size: A3	Number	Revision: A
Date: 4/14/2026		Sheet 3 of 7
File: C:\Users\..\TX Chain.SchDoc		Drawn By: Nick Grabbs - KI5YNG

RX CHAIN

RX CHAIN — 145.9 MHz FM AFSK uplink receiver. A 2m band-pass filter at the input rejects out-of-band signals before the mixer. The SA612 double-balanced mixer downconverts the 2m signal to baseband using the Si5351A CLK1 as LO. A 2nd-order Sallen-Key LPF (fc ≈ 3.3 kHz) filters the baseband, passing the 1200/2200 Hz AFSK tones while rejecting mixer products and noise. The MCP6022 U7B stage provides ~20 dB gain before the RP2040 ADC. Single-supply operation with 1.65V virtual ground (mid-supply bias).

2m Input Band-Pass Filter

2m input BPF: 3-pole LC, centered ~146 MHz, ~4 MHz bandwidth. Critical for protecting the SA612 mixer from overload. Must reject:

* 437 MHz TX leakage (>40 dB — this is your own transmitter)
* FM broadcast 88–108 MHz (>30 dB — these signals are very strong)
* 2nd harmonic of LO at 291.8 MHz (>20 dB) ALL capacitors must be C0G/NP0. Starting values are estimates — tune L and C values with VNA to center the passband on 145.9 MHz and achieve <3 dB insertion loss at the operating frequency. If insertion loss is too high, consider a 2-pole filter instead (remove the center L10 coupling and one shunt section).

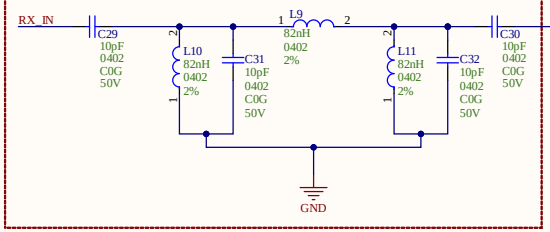

SA612 Mixer

SA612A: Gilbert cell mixer, suitable for VHF mixing down to baseband. Internal oscillator not used — external LO from Si5351A CLK1 injected on pin 6. Single-ended RF input (pin 2 AC grounded). R7 (1kΩ) between pins 4/5 sets the IF output impedance and provides a DC path. IF output is differential but we take single-ended from pin 4 through C25 to the baseband filter. VCC = +5V (not +3V3 — SA612 min supply is 4.5V). Current consumption ~3mA. If SA612 is unavailable, ADE-1 passive diode mixer is the backup.

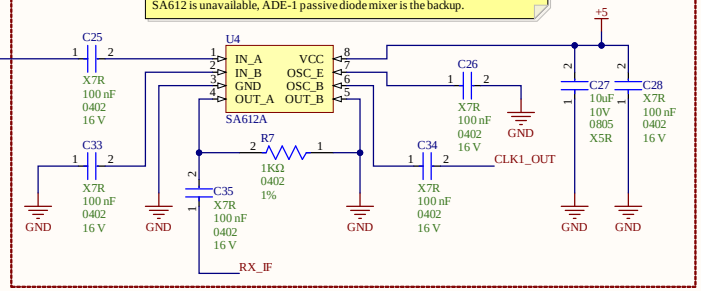

Sallen-Key Low-Pass Filter

Sallen-Key topology per Art of Electronics Fig 6.16A. C28 is the FEEDBACK capacitor — connects from the R8/R9 junction to the op-amp output. C29 goes from IN+ to GND. This is NOT two caps to ground — C28's feedback to the output is what creates the complex pole pair and gives -40 dB/decade rolloff (2nd order). With R8=R9 and C28=C29 (equal-component Butterworth), Q = 0.707, no ringing. fc = 1/(2π×R×C) = 1/(2π×22k×2.2nF) = 3,289 Hz. LTspice verified: -3dB at 2,985 Hz, 1200 Hz passes at -0.56 dB, 2200 Hz at -1.75 dB. C0G/NP0 caps required for filter accuracy.

MCP6022-I/SN - prototype
MCP6022-I/ST - flight

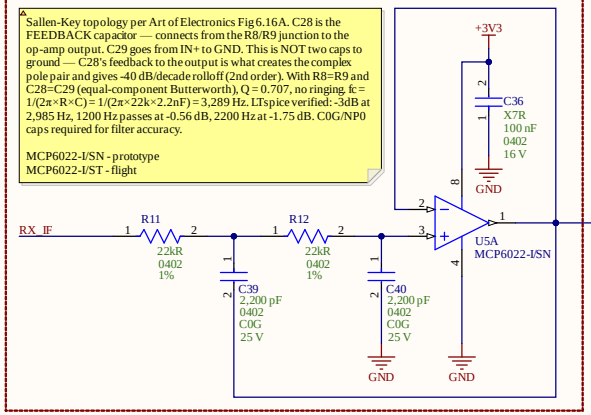

Baseband Gain Stage

Non-inverting amplifier, gain = 1 + 100k/10k = 11 (20.8 dB). R10/R11 bias the input to 1.65V (mid-supply) for single-supply operation. C32 (10µF) decouples the bias point at AC so it acts as a solid virtual ground for the signal. C30 AC-couples the Sallen-Key output to remove any DC offset from the filter. Output goes to RP2040 ADC (GP26/ADC0). Full-scale ADC input is 0–3.3V; with 1.65V bias, the signal can swing ±1.65V before clipping. Gain of 11 may need adjustment based on actual signal levels — change R13 to tune. MCP6022 GBW = 10 MHz, well above the ~3 kHz signal band.

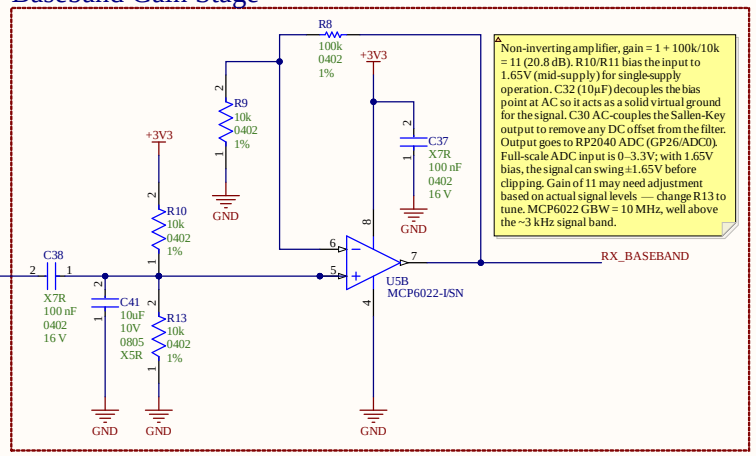

Title		
CubeSat Comms -- RX Chain		
Size A3	Number	Revision A
Date: 4/14/2026	Sheet 4of 7	
File: C:\Users\..\RX Chain.SchDoc	Drawn By: Nick Grabbs - KI5YNG	

DIGITAL CONTROL

DIGITAL CONTROL — Raspberry Pi Pico module (RP2040-based). Handles BPSK/DBPSK encoding for TX, AFSK demodulation for RX, Si5351A configuration via I2C, and command processing. Using Pico module for prototype — all RP2040 support circuitry (flash, regulator, crystal) is on-module. Bare RP2040 redesign deferred to v2 flight board after RF chain validation.

Pico Module

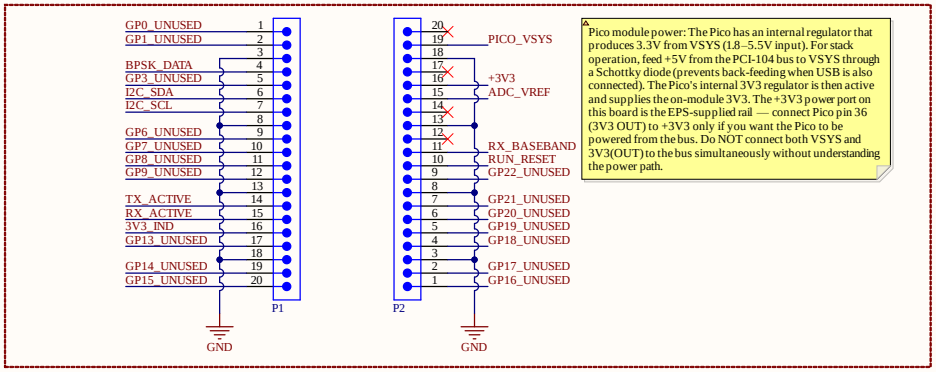

Status LED's

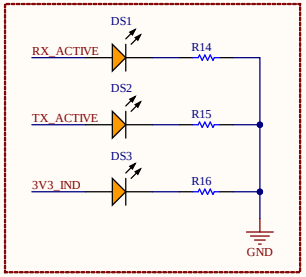

Spare GPIO Header

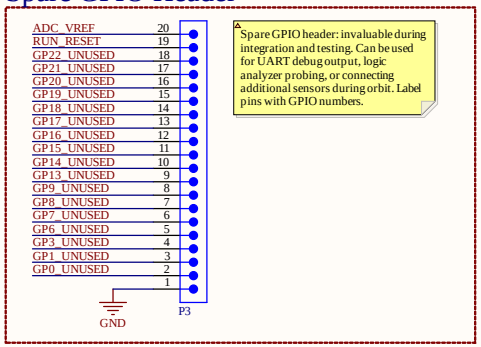

Title		
CubeSat Comms -- Digital Control		
Size: A3	Number	Revision: A
Date: 4/14/2026		Sheet 5of 7
File: C:\Users\..\Digital Control.SchDoc		Drawn By: Nick Grabbs - KI5YNG

POWER DISTRIBUTION

POWER DISTRIBUTION — The comms board receives +3V3 and +5V from the EPS via the PCI-104 stack connector. No on-board voltage regulation. This sheet provides input protection, bulk bypass capacitors, and distributes power to all subsystems. Power budget: ~150 mA on +3V3 (RP2040 + Si5351A + logic), ~80 mA on +5V (SA612 + ADL5602 + tripler bias). Total: <250 mA — well within EPS TPS62933F capacity (3A per rail).

Input Protection and Filtering

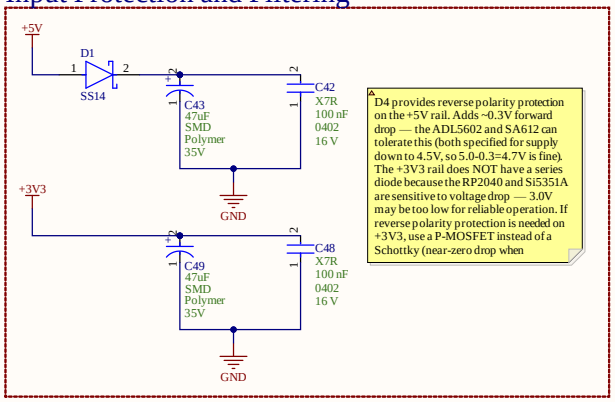

Per-Subsystem Bypass

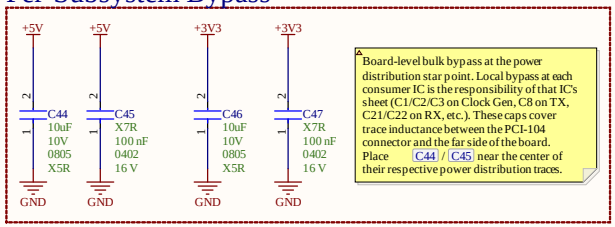

Pico Module Power Feed

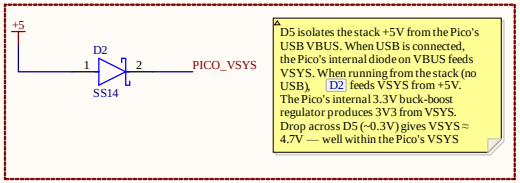

Power Indicator LEDs

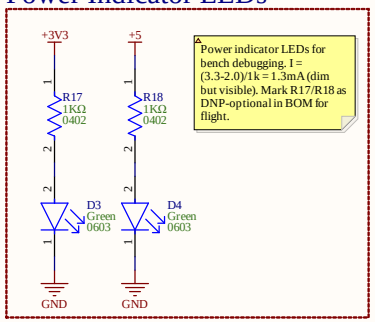

Title: CubeSat Comms -- Power		
Size: A3	Number	Revision: A
Date: 4/14/2026		Sheet 6 of 7
File: C:\Users\..\Power.SchDoc		Drawn By: Nick Grabbs - KI5YNG

Connectors

CONNECTORS — PCI-104 stack connector for inter-board power and signal distribution, SMA connectors for TX and RX antenna ports, and test points for bench validation. All power (+3V3, +5V) and I2C telemetry routes through the PCI-104 header. The comms board is a power CONSUMER — it receives regulated rails from the EPS.

PCI-104 Stack Connector

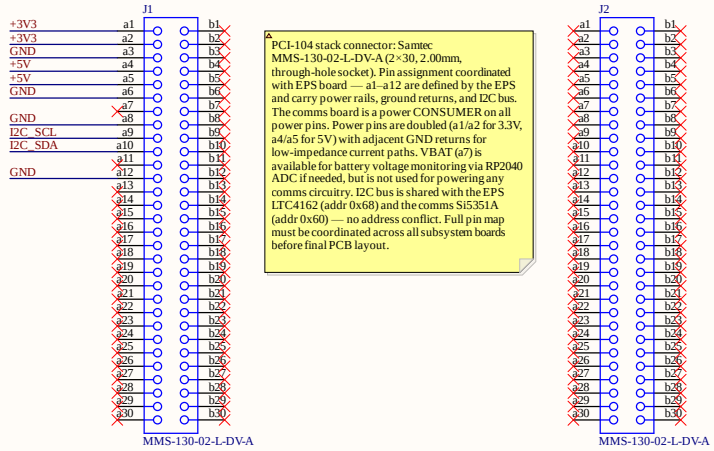

PCI-104 stack connector: Samtec MMS-130-02-L-DV-A (2×30, 2.00mm, through-hole socket). Pin assignment coordinated with EPS board — a1–a12 are defined by the EPS and carry power rails, ground returns, and I2C bus. The comms board is a power CONSUMER on all power pins. Power pins are doubled (a1/a2 for 3.3V, a4/a5 for 5V) with adjacent GND returns for low-impedance current paths. VBAT (a7) is available for battery voltage monitoring via RP2040 ADC if needed, but is not used for powering any comms circuitry. I2C bus is shared with the EPS LTC4162 (addr 0x68) and the comms Si5351A (addr 0x60) — no address conflict. Full pin map must be coordinated across all subsystem boards before final PCB layout.

Test Points

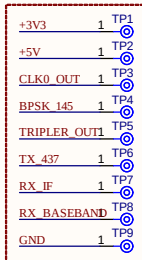

Test points are critical for bring-up and debugging. TP3 - TP6 trace the TX signal through the chain — essential for validating each stage independently. TP7 - TP8 trace the RX chain. Use short probe leads on RF test points to minimize added inductance. TP9 (GND) should be a loop-style test point for easy scope ground clip attachment. For flight boards, reduce to TP1 / TP2 (power) + TP9 (GND) minimum.

Bulk Bypass at Stack Connector

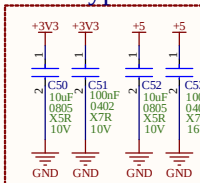

Connector-side bypass caps are the receiving complement to the EPS board's connector-side caps (C60–C63 on EPS Sheet 3). Together they form a low-impedance distributed bypass across the stack connector. Place these caps as close to the connector pins as possible — trace inductance between connector and cap defeats the purpose.

RF Connectors

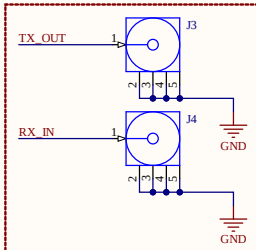

Separate TX and RX SMA connectors — no diplexer for prototype. For flight, a diplexer can be added between a single antenna and the two SMA ports, or external to the board. SMA center pin impedance is 50Ω — match traces accordingly during PCB layout. Keep SMA-to-first-component traces as short as possible, with continuous ground plane underneath. Controlled-impedance traces (50Ω microstrip or CPWG) required for RF paths.

Title		
CubeSat Comms - Connectors		
Size A3	Number	Revision A
Date: 4/14/2026	Sheet 7 of 7	
File: C:\Users\..\Connectors.SchDoc	Drawn By: Nick Grabbs - KI5YNG	