Amulet Motion Controller

Variant: RELEASED

2024-11-24
Rev 1.2

Page	Index	Page	Index	Page	Index	Page	Index
1	Cover Page	11	User - LED Indicators	21	Revision History	31	.....
2	Block Diagram	12	Sensing - Temperature	22	.....	32	.....
3	Project Architecture	13	Sensing - Battery	23	.....	33	.....
4	MCU - Power	14	Sensing - Position	24	.....	34	.....
5	MCU - I/Os	15	Interface - RS-422	25	.....	35	.....
6	Power - Generation	16	Interface - FD-CAN	26	.....	36	.....
7	Power - Connectors	17	Interface - Fan Control	27	.....	37	.....
8	Motor Control - Top Level	18	Interface - Interconnects	28	.....	38	.....
9	Motor Control - Inverter	19	Misc - Holes, Fiducials	29	.....	39	.....
10	Misc - Board Version, DAC	20	Power - Sequencing	30	.....	40	.....

TOP VIEW

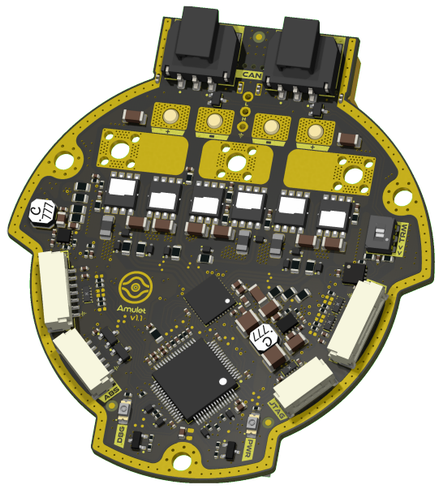

BOTTOM VIEW

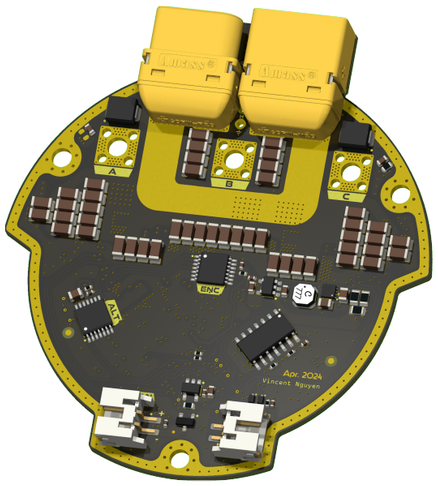

NOTES

Schematic based off Josh Pieper's moteus controllers.

Not fitted components are marked as ✗

DRAFT - Very early stage of schematic, ignore details.
PRELIMINARY - Close to final schematic.
CHECKED - There shouldn't be any mistakes. Contact the engineer if you find any.
RELEASED - A board with this schematic has been sent to production.

Date: 24-Nov-2024

DESIGN CONSIDERATIONS

DESIGN NOTE: Example text for informational design notes.

DESIGN NOTE: Example text for debug notes.

DESIGN NOTE: Example text for cautionary design notes.

DESIGN NOTE: Example text for critical design notes.

LAYOUT NOTE: Example text for critical layout guidelines.

Comments:	Company: EPFL Xplore Research		Variant: RELEASED	Git Hash: 38f2a13
	Board Name: Amulet Motion Controller		Project Name: Chienpanzé	
Sheet Title: Cover Page	File Name: amulet_controller.kicad_sch	Designer: Vincent Nguyen	Date: 2024-04-13	Revision: 1.2
Sheet Path: /		Reviewer:	Size: A3	Sheet: 1 of 21

[2] Block Diagram

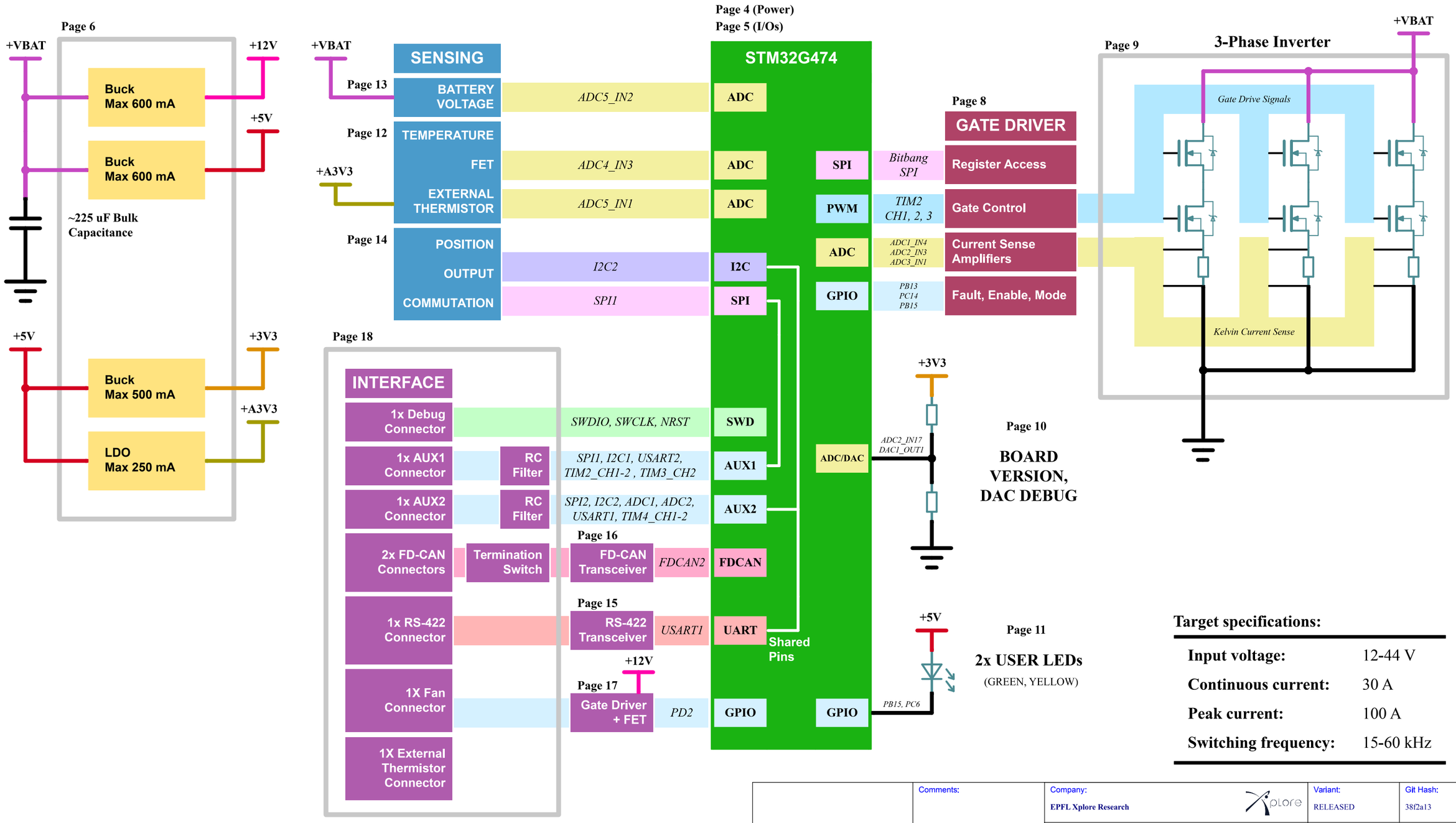

Target specifications:

Input voltage:	12-44 V
Continuous current:	30 A
Peak current:	100 A
Switching frequency:	15-60 kHz

Comments:	Company: EPFL Xplore Research		Variant: RELEASED	Git Hash: 38f2a13
	Board Name: Amulet Motion Controller		Project Name: Chienpanzé	
Sheet Title: Block Diagram	File Name: Block Diagram.kicad_sch	Designer: Vincent Nguyen	Date: 2024-04-13	Revision: 1.2
Sheet Path: /Block Diagram/		Reviewer:	Size: A3	Sheet: 2 of 21

[3] Project Architecture

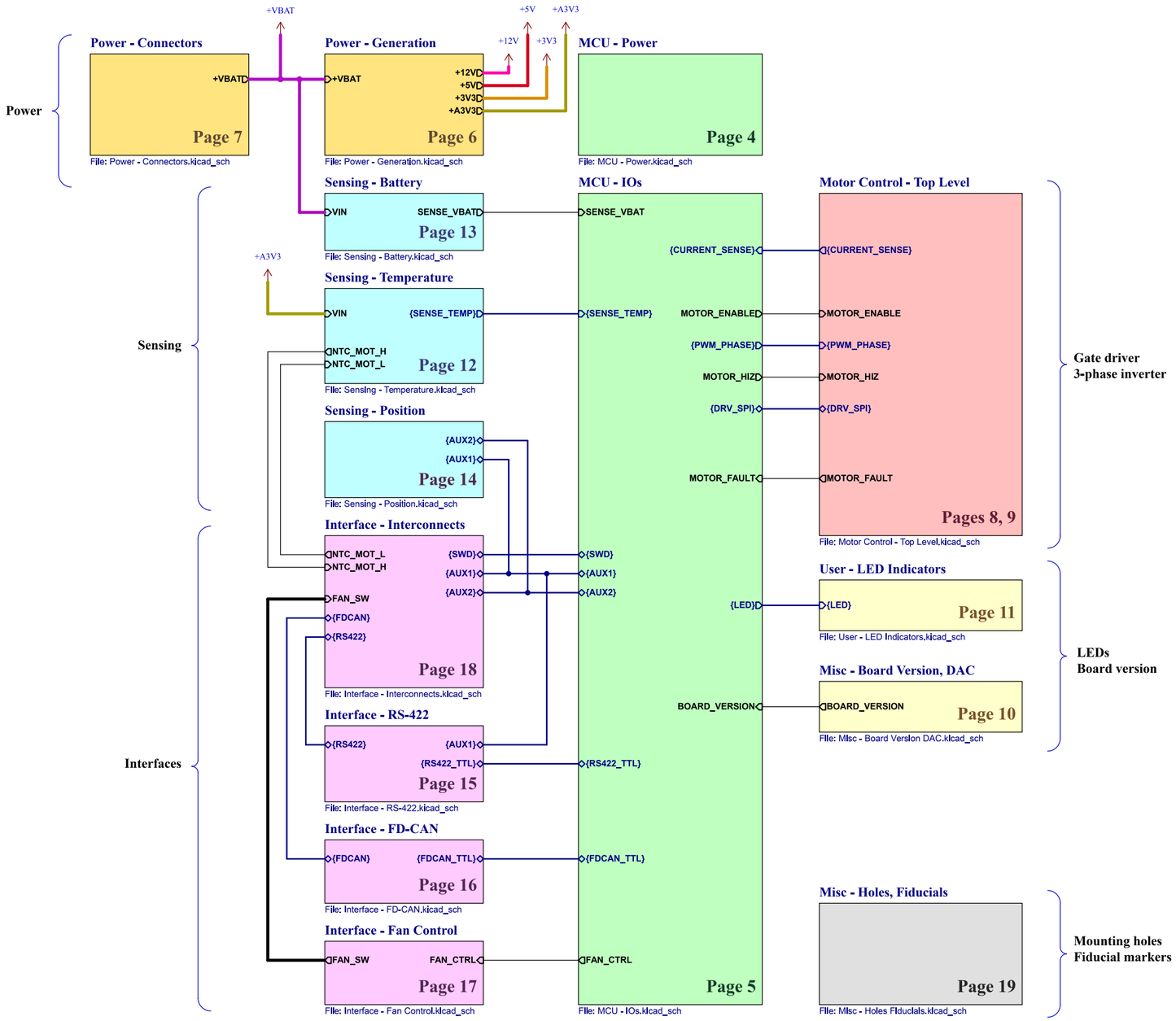

Comments:	Company: EPFL Xplore Research	Variant: RELEASED	Git Hash: 38f2a13
	Board Name: **Amulet Motion Controller**	Project Name: **Chienpanzé**	
Sheet Title: Project Architecture	File Name: Project Architecture.kicad_sch	Designer: Vincent Nguyen	Date: 2023-12-22 / Revision: 1.2
Sheet Path: /Project Architecture/	Reviewer:	Size: A3	Sheet: 3 of 21

[4] MCU - Power

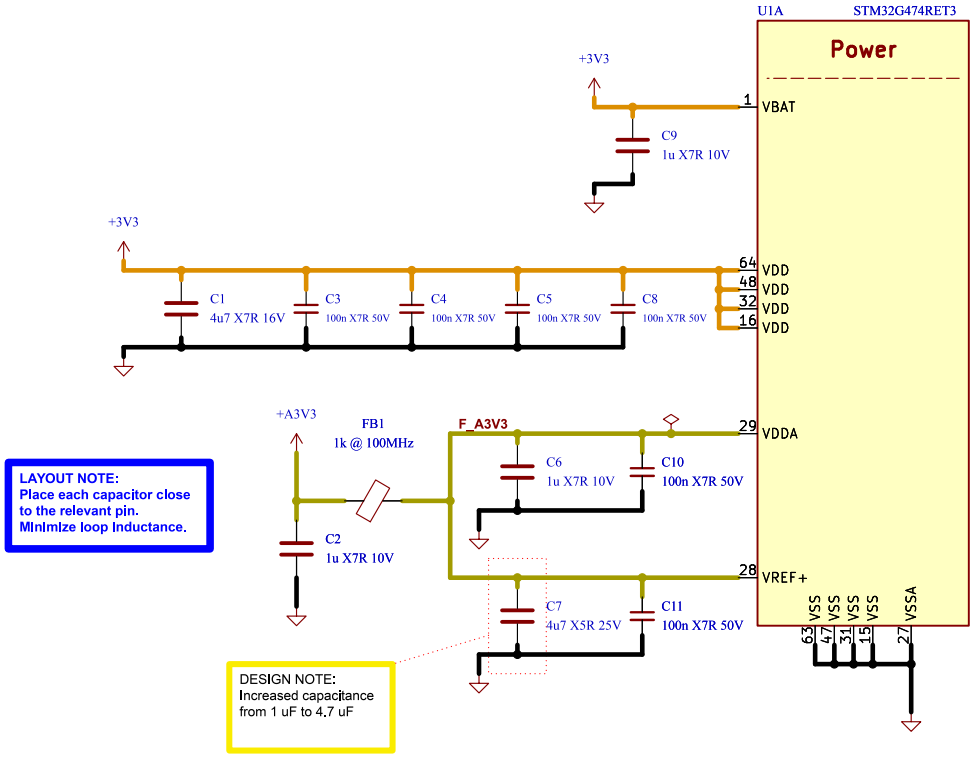

Microcontroller Power Supply Scheme

Comments: AN5346 STM32G474 Datasheet p.81 J. Pieper ADC investigation	Company: EPFL Xplore Research		Variant: RELEASED	Git Hash: 38f2a13
	Board Name: **Amulet Motion Controller**		Project Name: **Chienpanzé**	
Sheet Title: MCU - Power	File Name: MCU - Power.kicad_sch	Designer: Vincent Nguyen	Date: 2023-12-18	Revision: 1.2
Sheet Path: /Project Architecture/MCU - Power/		Reviewer:	Size: A4	Sheet: 4 of 21

[5] MCU - I/Os

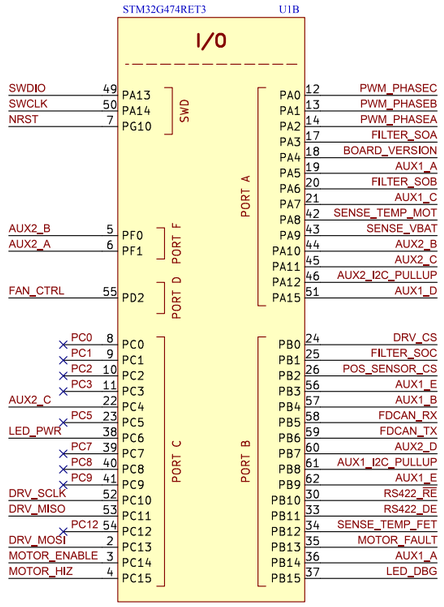

DESIGN NOTE:
We use the LQFP64 version to have extra pins for controlling an external fan.

DESIGN NOTE:
Do not forget to flash option bytes when flashing for the first time.

LAYOUT NOTE:
Footprint deviates from datasheet and IPC7351 to allow for soldermask sliver between pads according to PCBWay design rules.

Microcontroller I/O Domain

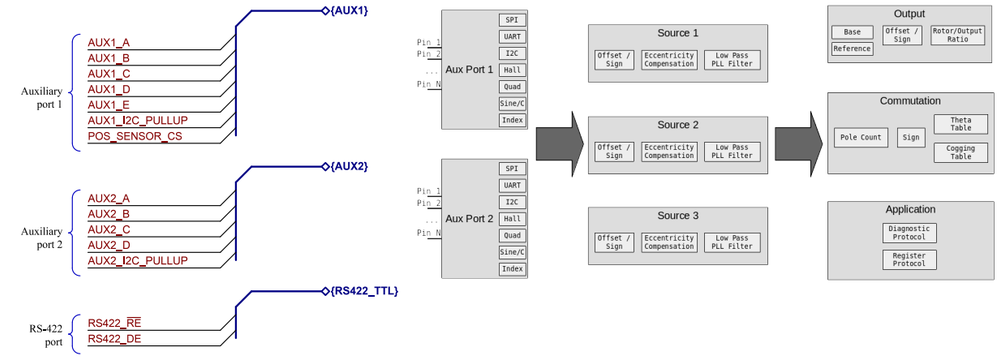

Auxiliary Ports

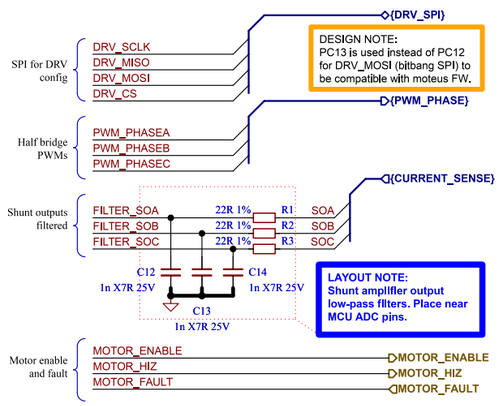

DESIGN NOTE:
PC13 is used instead of PC12 for DRV_MOSI (bitbang SPI) to be compatible with moteus FW.

LAYOUT NOTE:
Shunt amplifier output low-pass filters. Place near MCU ADC pins.

Connection to Gate Driver

5Mbps FD-CAN Bus

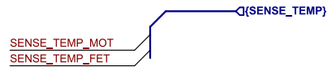

Temperature Sense

Battery Voltage Sense

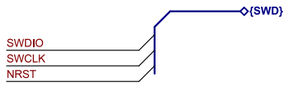

SWD (Debug) Port

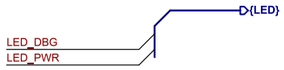

User LEDs

Board Version Selection

Low-Side Fan Control

Gate Driver

MOTOR_ENABLE	TP1	MOTOR_ENABLE
MOTOR_HIZ	TP2	MOTOR_HIZ
MOTOR_FAULT	TP3	MOTOR_FAULT
DRV_SCLK	TP4	DRV_SCLK
DRV_MISO	TP5	DRV_MISO
DRV_MOSI	TP6	DRV_MOSI
DRV_CS	TP7	DRV_CS
PWM_PHASEA	TP8	PWM_PHASEA
PWM_PHASEB	TP9	PWM_PHASEB
PWM_PHASEC	TP10	PWM_PHASEC
SOA	TP11	SOA
SOB	TP12	SOB
SOC	TP13	SOC

Debug

SWDIO	TP14	SWDIO
SWCLK	TP15	SWCLK
NRST	TP16	NRST

Auxiliary pins 1

AUX1_A	TP17	AUX1_A
AUX1_B	TP18	AUX1_B
AUX1_C	TP19	AUX1_C
AUX1_D	TP20	AUX1_D
AUX1_E	TP21	AUX1_E
AUX1_I2C_PULLUP	TP22	AUX1_I2C_PULLUP
POS_SENSOR_CS	TP23	POS_SENSOR_CS

Auxiliary pins 2

AUX2_A	TP24	AUX2_A
AUX2_B	TP25	AUX2_B
AUX2_C	TP26	AUX2_C
AUX2_D	TP27	AUX2_D
AUX2_I2C_PULLUP	TP28	AUX2_I2C_PULLUP

RS-422

RS422_RE	TP29	RS422_RE
RS422_DE	TP30	RS422_DE

LEDs

LED_DBG	TP31	LED_DBG
LED_PWR	TP32	LED_PWR

FD-CAN

FDCAN_RX	TP33	FD_CAN_RX
FDCAN_TX	TP34	FDCAN_TX

Fan

FAN_CTRL	TP35	FAN_CTRL

Sense

SENSE_TEMP_MOT	TP36	SENSE_TEMP_MOT
SENSE_TEMP_FET	TP37	SENSE_TEMP_FET
SENSE_VBAT	TP38	SENSE_VBAT

Test Points

Comments:
References:
Flexible I/O worked examples
Flexible I/O source configuration

Company: EPFL Xplore Research			Variant: RELEASED	Git Hash: 38f2a13
Board Name: Amulet Motion Controller			Project Name: Chienpanzé	
Sheet Title: MCU - I/Os	File Name: MCU - IOs.kicad_sch	Designer: Vincent Nguyen	Date: 2023-12-20	Revision: 1.2
Sheet Path: /Project Architecture/MCU - IOs/		Reviewer:	Size: A3	Sheet: 5 of 21

[6] Power - Generation

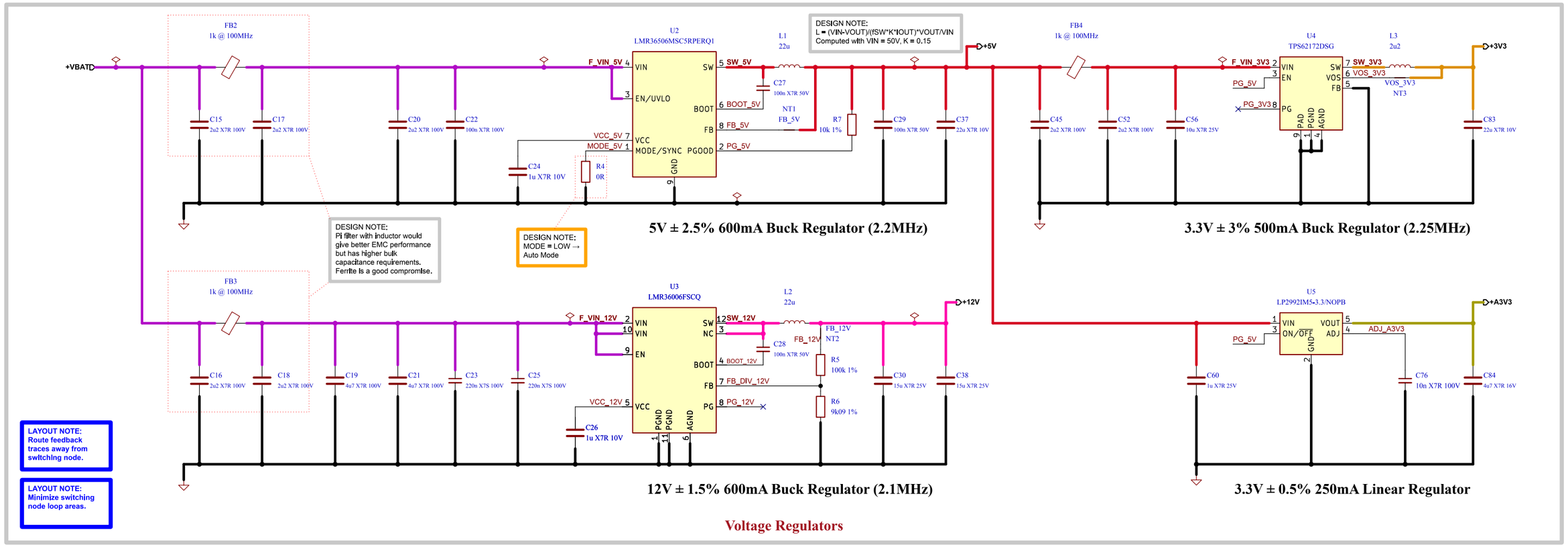

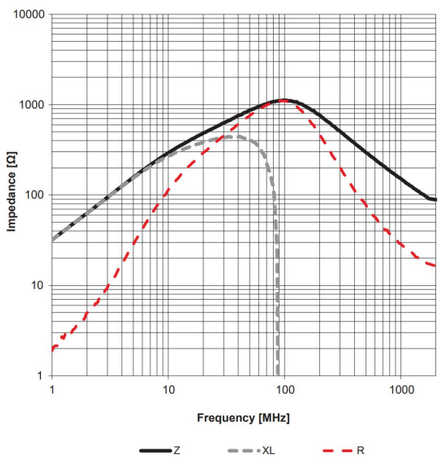

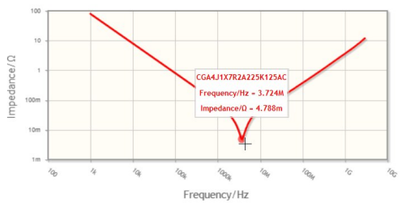

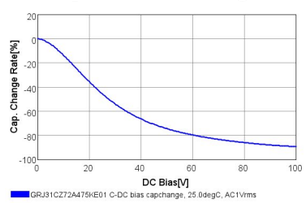

DESIGN NOTE:
XL drops around 45th harmonic.

DESIGN NOTE:
Effective capacitance at 33V is approximately 2.1 uF

Capacitor and Ferrite Bead Parameters

Battery

+VBAT	TP39	+VBAT
+VBAT	TP40	+VBAT
+VBAT	TP41	+VBAT

Filtered Power Rails

F_VIN_12V	TP42	F_VIN_12V
F_VIN_5V	TP43	F_VIN_5V
F_VIN_3V3	TP44	F_VIN_3V3

Power Rails

+12V	TP45	+12V
+5V	TP46	+5V
+5V	TP47	+5V
+3V3	TP48	+3V3
+3V3	TP49	+3V3
+3V3	TP50	+3V3
+A3V3	TP51	+A3V3

Ground

GND	TP52	GND
GND	TP53	GND
GND	TP54	GND
GND	TP55	GND
GND	TP56	GND
GND	TP57	GND
GND	TP58	GND

Test Points

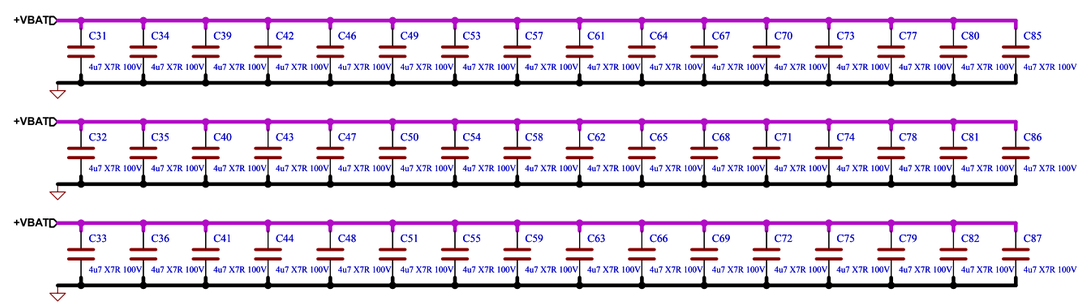

DESIGN NOTE:
An external precharge circuit is advised to charge the bulk capacitors if multiple boards are connected.

DC-Link Bulk Capacitors. 48 x 4.7 uF = 225.6 uF (100.8 uF at 33V)

DESIGN NOTE:
X6S 10uF is marginally better (but worse DC bias derating) at a higher price.

Comments: +12V (600 mA): Fan power; +5V (600 mA): Gate Driver, LEDs; +3V3 (500 mA): digital 3.3V; +3V3A (250 mA): analog 3.3V	Company: EPFL Xplore Research		Variant: RELEASED	Git Hash: 38f2a13
	Board Name: Amulet Motion Controller		Project Name: Chienpanzé	
Sheet Title: Power - Generation	File Name: Power - Generation.kicad_sch	Designer: Vincent Nguyen	Date: 2024-04-13	Revision: 1.2
Sheet Path: /Project Architecture/Power - Generation/		Reviewer:	Size: A3	Sheet: 6 of 21

[7] Power - Connectors

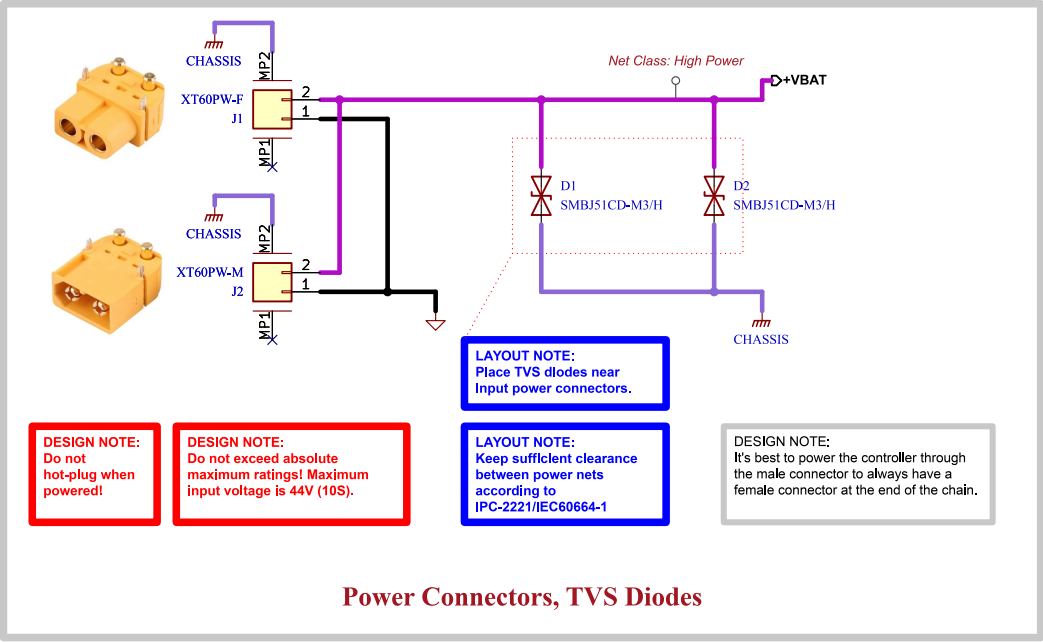

Power Connectors, TVS Diodes

Comments:	Company: EPFL Xplore Research		Variant: RELEASED	Git Hash: 38f2a13
	Board Name: **Amulet Motion Controller**		Project Name: **Chienpanzé**	
Sheet Title: Power - Connectors	File Name: Power - Connectors.kicad_sch	Designer: Vincent Nguyen	Date: 2023-12-31	Revision: 1.2
Sheet Path: /Project Architecture/Power - Connectors/		Reviewer:	Size: A4	Sheet: 7 of 21

[8] Motor Control - Top Level

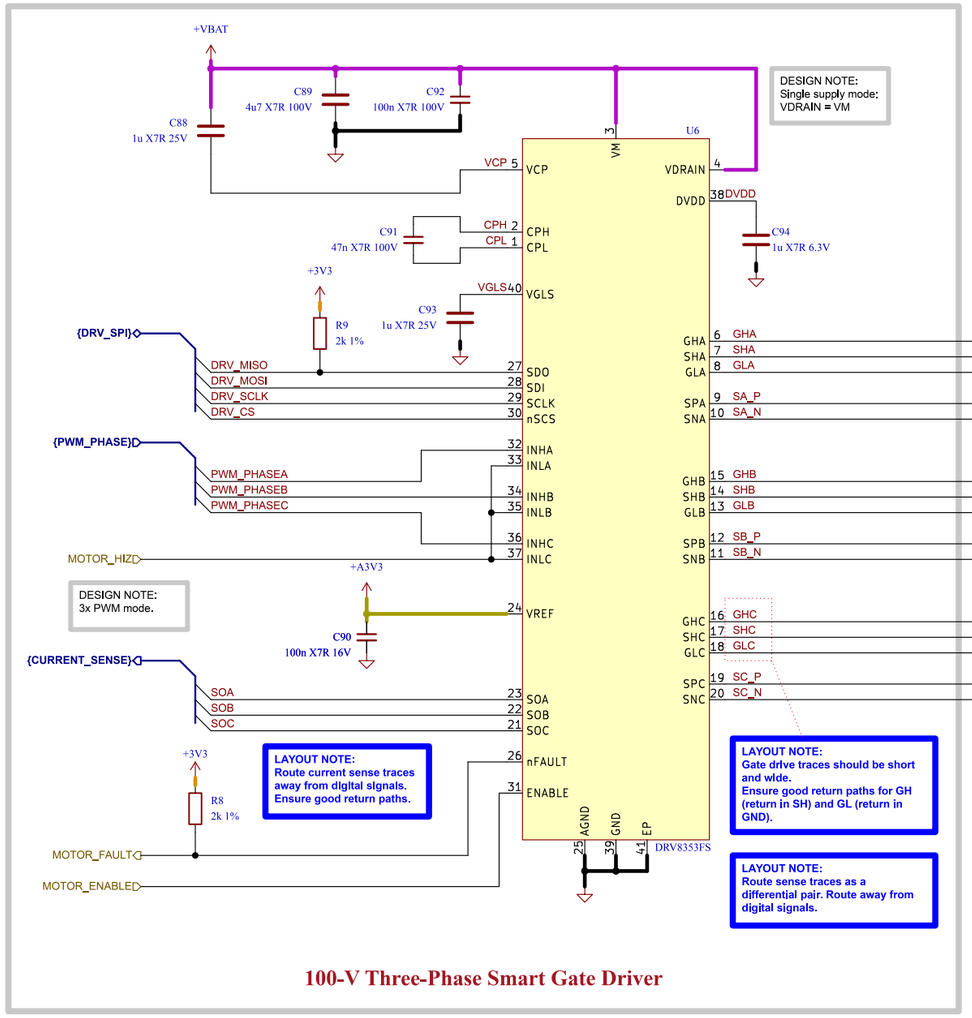

100-V Three-Phase Smart Gate Driver

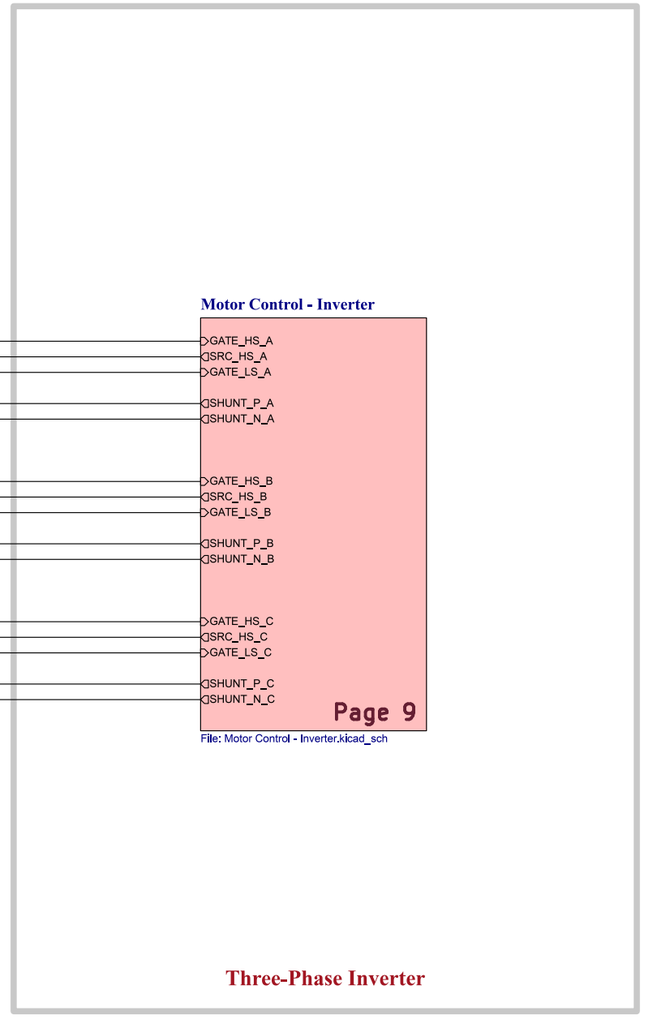

Three-Phase Inverter

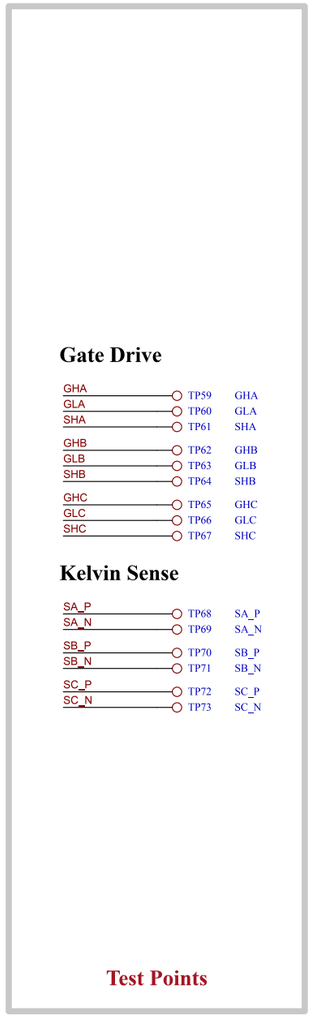

Test Points

Comments:	Company: EPFL Xplore Research		Variant: RELEASED	Git Hash: 38f2a13
	Board Name: **Amulet Motion Controller**		Project Name: **Chienpanzé**	
Sheet Title: Motor Control - Top Level	File Name: Motor Control - Top Level.kicad_sch	Designer: Vincent Nguyen	Date: 2023-12-20	Revision: 1.2
Sheet Path: /Project Architecture/Motor Control - Top Level/		Reviewer:	Size: A3	Sheet: 8 of 21

[9] Motor Control - Inverter

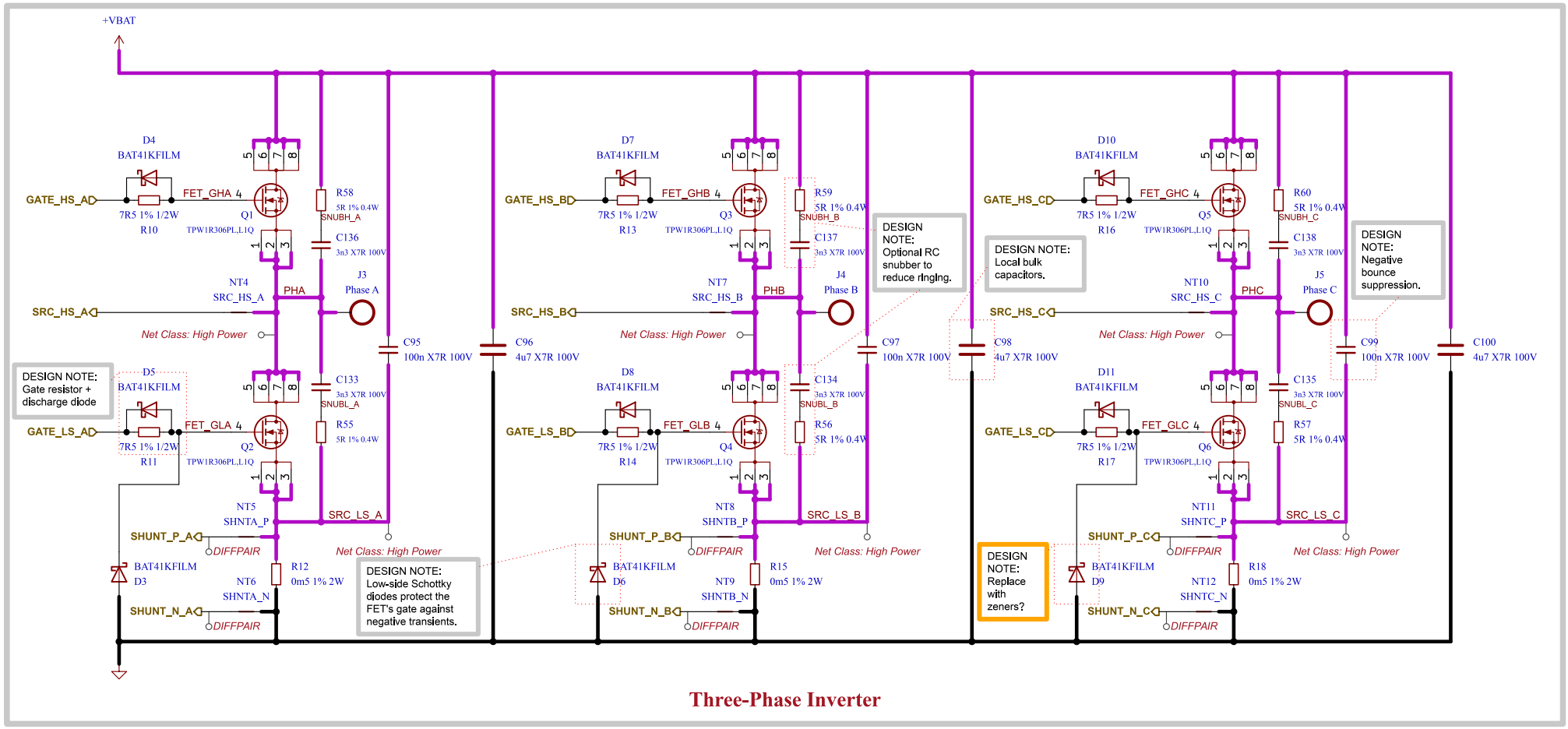

Three-Phase Inverter

LAYOUT NOTE:
High current traces must be carefully designed. Ensure ground return path does not cross sensitive parts of the board. Use multiple planes for higher current carrying capacity.

LAYOUT NOTE:
Keep sufficient clearance between power nets according to IPC-2221/IEC60664-1.

DESIGN NOTE:
A gate drive current that is too large can damage the FETs!

Comments: System Design Considerations for High-Power Motor Driver Applications; Best Practices for Board Layout of Motor Drivers; Proper RC Snubber Design for Motor Drivers	Company: EPFL Xplore Research		Variant: RELEASED	Git Hash: 38f2a13
	Board Name: **Amulet Motion Controller**		Project Name: **Chienpanzé**	
Sheet Title: Motor Control - Inverter	File Name: Motor Control - Inverter.kicad_sch	Designer: Vincent Nguyen	Date: 2024-01-25	Revision: 1.2
Sheet Path: /Project Architecture/Motor Control - Top Level/Motor Control - Inverter/		Reviewer:	Size: A4	Sheet: 9 of 21

[10] Misc - Board Version, DAC

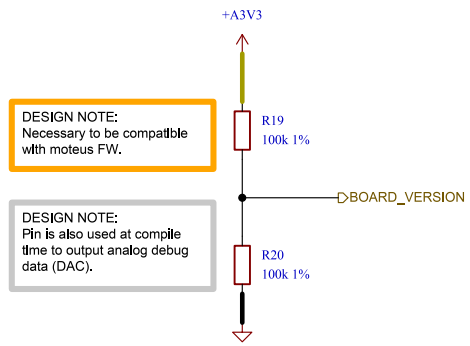

		TOP	BOTTOM
moteus	r1.1, r1.2	×	100k
	r1.3	100k	×
Amulet	v1.0-1.1	100k	100k

Board Version Resistor Divider

Comments:	Company: EPFL Xplore Research	Variant: RELEASED	Git Hash: 38f2a13
	Board Name: Amulet Motion Controller	Project Name: Chienpanzé	
Sheet Title: Misc - Board Version, DAC	File Name: Misc - Board Version DAC.kicad_sch	Designer: Vincent Nguyen	Date: 2024-04-13 / Revision: 1.2
Sheet Path: /Project Architecture/Misc - Board Version, DAC/		Reviewer:	Size: A4 / Sheet: 10 of 21

[11] User - LED Indicators

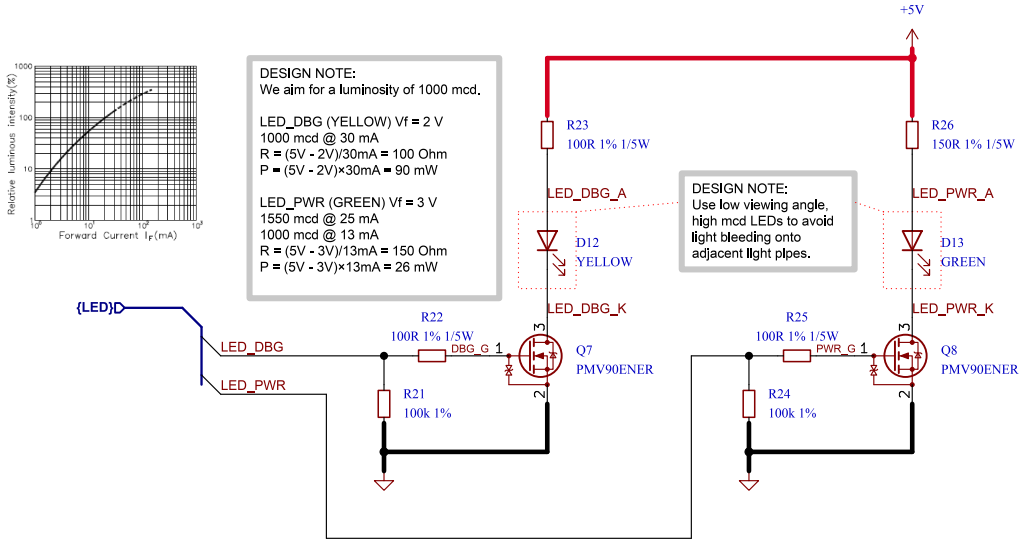

LED Indicators

Comments:	Company: EPFL Xplore Research		Variant: RELEASED	Git Hash: 38f2a13
	Board Name: **Amulet Motion Controller**		Project Name: **Chienpanzé**	
Sheet Title: User - LED Indicators	File Name: User - LED Indicators.kicad_sch	Designer: Vincent Nguyen	Date: 2023-12-19	Revision: 1.2
Sheet Path: /Project Architecture/User - LED Indicators/		Reviewer:	Size: A4	Sheet: 11 of 21

[12] Sensing - Temperature

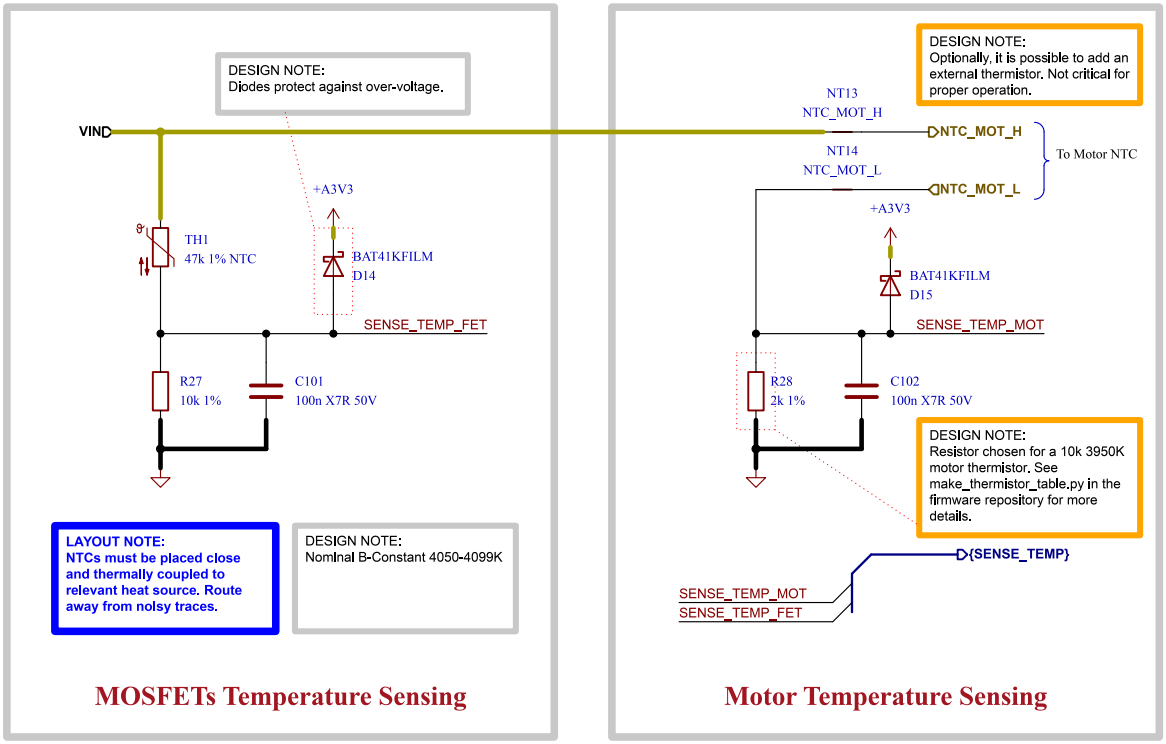

Comments:	Company: EPFL Xplore Research		Variant: RELEASED	Git Hash: 38f2a13
	Board Name: **Amulet Motion Controller**		Project Name: **Chienpanzé**	
Sheet Title: Sensing - Temperature	File Name: Sensing - Temperature.kicad_sch	Designer: Vincent Nguyen	Date: 2024-04-13	Revision: 1.2
Sheet Path: /Project Architecture/Sensing - Temperature/		Reviewer:	Size: A4	Sheet: 12 of 21

[13] Sensing - Battery

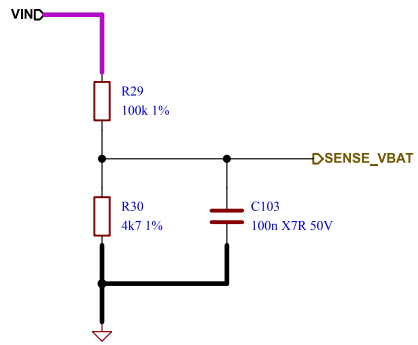

DESIGN NOTE:
1/23 temperature stable voltage divider. Use low ppm resistors.

12S: max voltage: 2.19 V
8S: max voltage: 1.95 V
6S: max voltage: 1.46 V

Battery Voltage Sensing

Comments:	Company: EPFL Xplore Research		Variant: RELEASED	Git Hash: 38f2a13
	Board Name: Amulet Motion Controller		Project Name: Chienpanzé	
Sheet Title: Sensing - Battery	File Name: Sensing - Battery.kicad_sch	Designer: Vincent Nguyen	Date: 2023-10-14	Revision: 1.2
Sheet Path: /Project Architecture/Sensing - Battery/		Reviewer:	Size: A4	Sheet: 13 of 21

[14] Sensing - Position

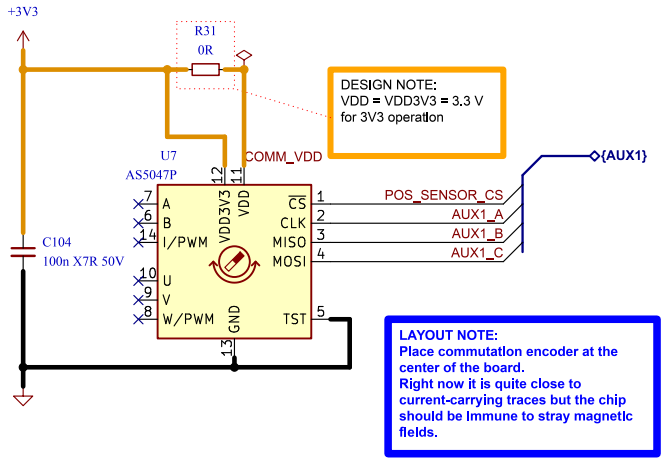

14-Bit On-Axis Magnetic Rotary Position Sensor (commutation)

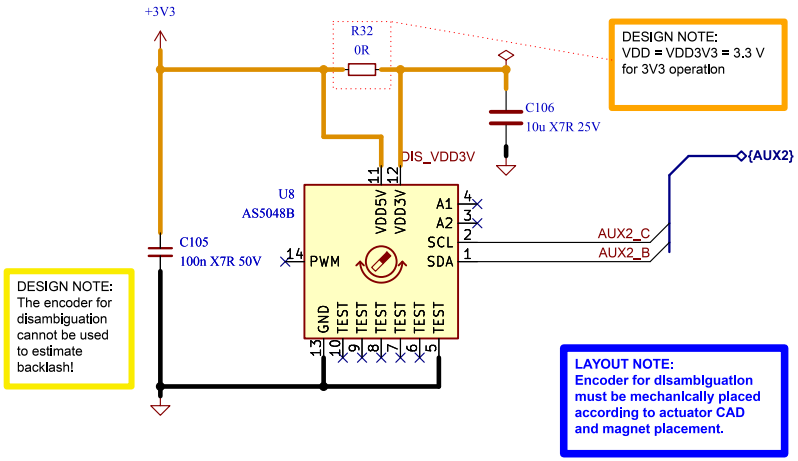

14-Bit On-Axis Magnetic Rotary Position Sensor (disambiguation)

DESIGN NOTE:
AS5047P senses magnet mounted on planetary sun gear, for commutation.
AS5048B senses magnet mounted on shaft with same reduction factor as planetary gearbox for disambiguation.

Comments:	Company: EPFL Xplore Research		Variant: RELEASED	Git Hash: 38f2a13
	Board Name: **Amulet Motion Controller**		Project Name: **Chienpanzé**	
Sheet Title: Sensing - Position	File Name: Sensing - Position.kicad_sch	Designer: Vincent Nguyen	Date: 2023-10-14	Revision: 1.2
Sheet Path: /Project Architecture/Sensing - Position/		Reviewer:	Size: A4	Sheet: 14 of 21

[15] Interface - RS-422

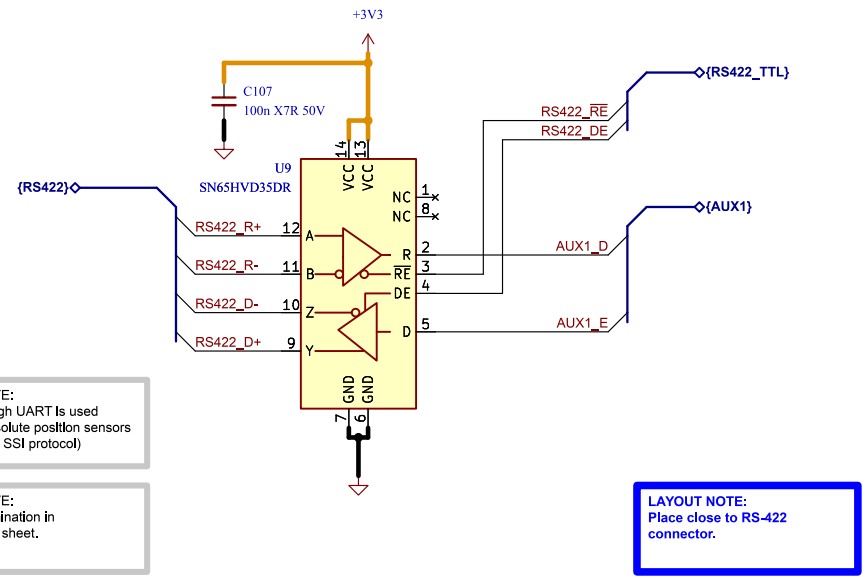

DESIGN NOTE:
RS-422 through UART Is used mostly for absolute position sensors (e.g. Aksim-2, SSI protocol)

DESIGN NOTE:
100-ohm termination in Interconnects sheet.

LAYOUT NOTE:
Place close to RS-422 connector.

3.3-V Full-Duplex RS-422 Interface

Comments:	Company: EPFL Xplore Research		Variant: RELEASED	Git Hash: 38f2a13
	Board Name: Amulet Motion Controller		Project Name: Chienpanzé	
Sheet Title: Interface - RS-422	File Name: Interface - RS-422.kicad_sch	Designer: Vincent Nguyen	Date: 2023-10-15	Revision: 1.2
Sheet Path: /Project Architecture/Interface - RS-422/		Reviewer:	Size: A4	Sheet: 15 of 21

[16] Interface - FD-CAN

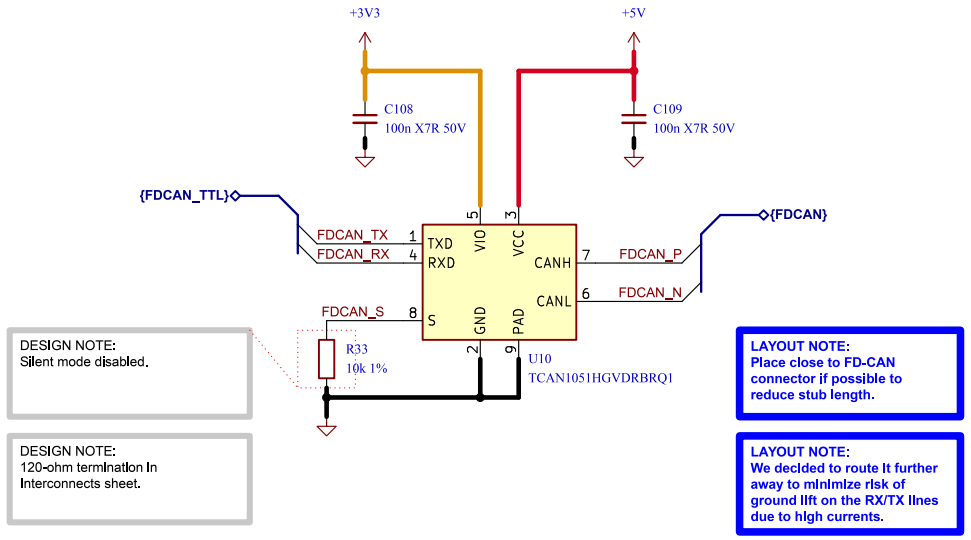

DESIGN NOTE:
Silent mode disabled.

DESIGN NOTE:
120-ohm termination in Interconnects sheet.

LAYOUT NOTE:
Place close to FD-CAN connector if possible to reduce stub length.

LAYOUT NOTE:
We decided to route it further away to minimize risk of ground lift on the RX/TX lines due to high currents.

Fault Protected FD-CAN Transceiver

Comments:	Company: EPFL Xplore Research		Variant: RELEASED	Git Hash: 38f2a13
	Board Name: Amulet Motion Controller		Project Name: Chienpanzé	
Sheet Title: Interface - FD-CAN	File Name: Interface - FD-CAN.kicad_sch	Designer: Vincent Nguyen	Date: 2023-10-15	Revision: 1.2
Sheet Path: /Project Architecture/Interface - FD-CAN/		Reviewer:	Size: A4	Sheet: 16 of 21

[17] Interface - Fan Control

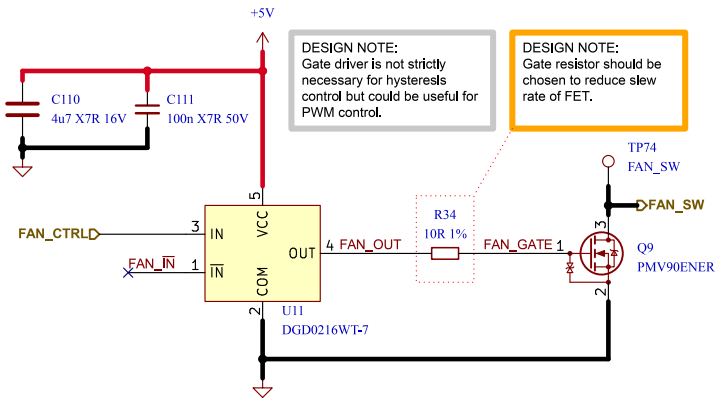

Low-side Fan Switch and Gate Driver

Comments:	Company: EPFL Xplore Research		Variant: RELEASED	Git Hash: 38f2a13
	Board Name: **Amulet Motion Controller**		Project Name: **Chienpanzé**	
Sheet Title: Interface - Fan Control	File Name: Interface - Fan Control.kicad_sch	Designer: Vincent Nguyen	Date: 2023-11-19	Revision: 1.2
Sheet Path: /Project Architecture/Interface - Fan Control/		Reviewer:	Size: **A4**	Sheet: **17** of **21**

[18] Interface - Interconnects

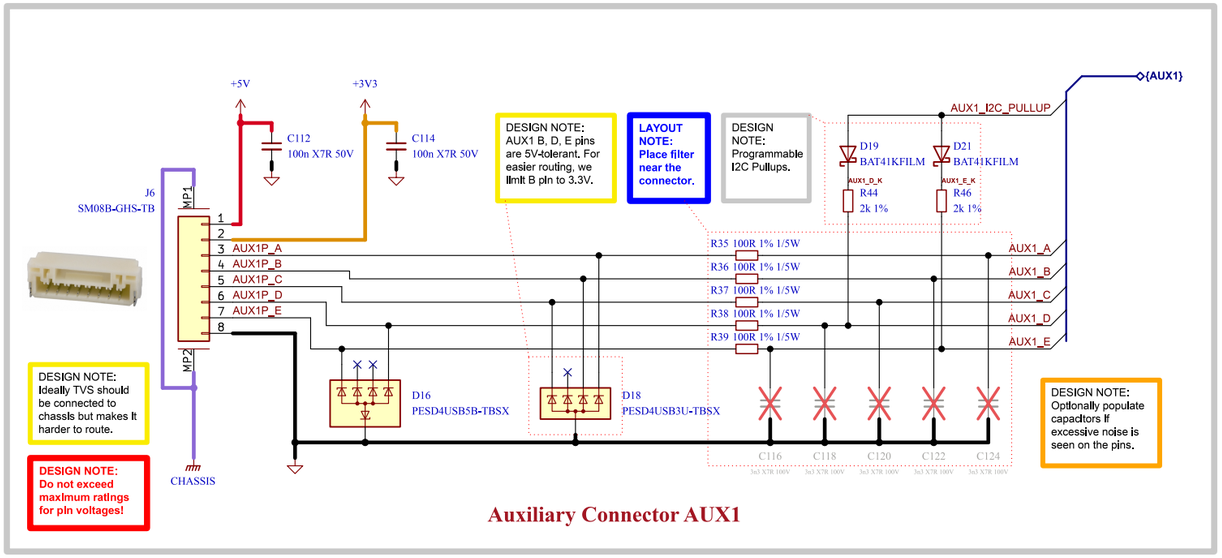

Auxiliary Connector AUX1

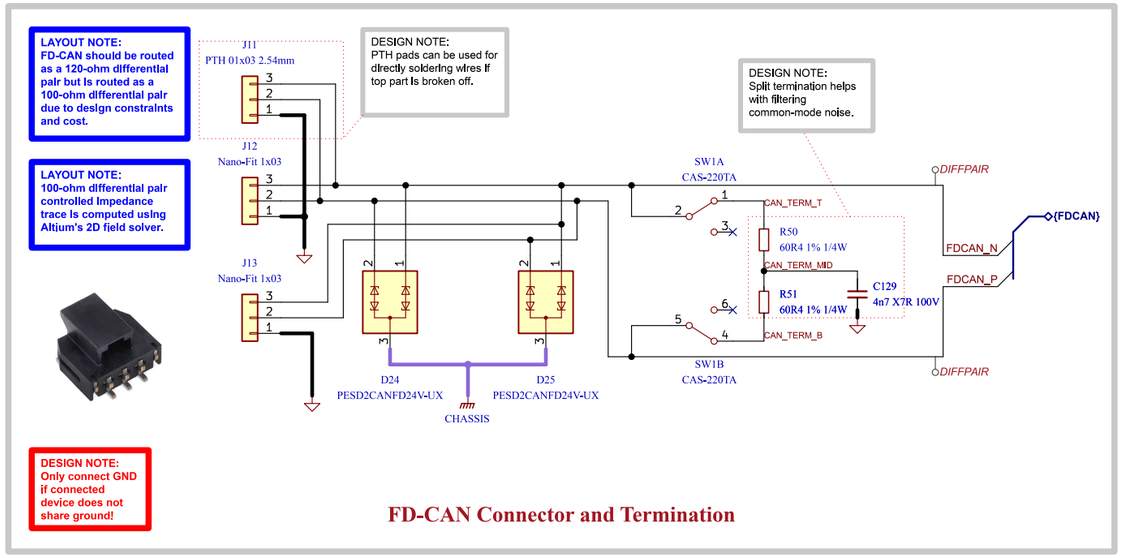

FD-CAN Connector and Termination

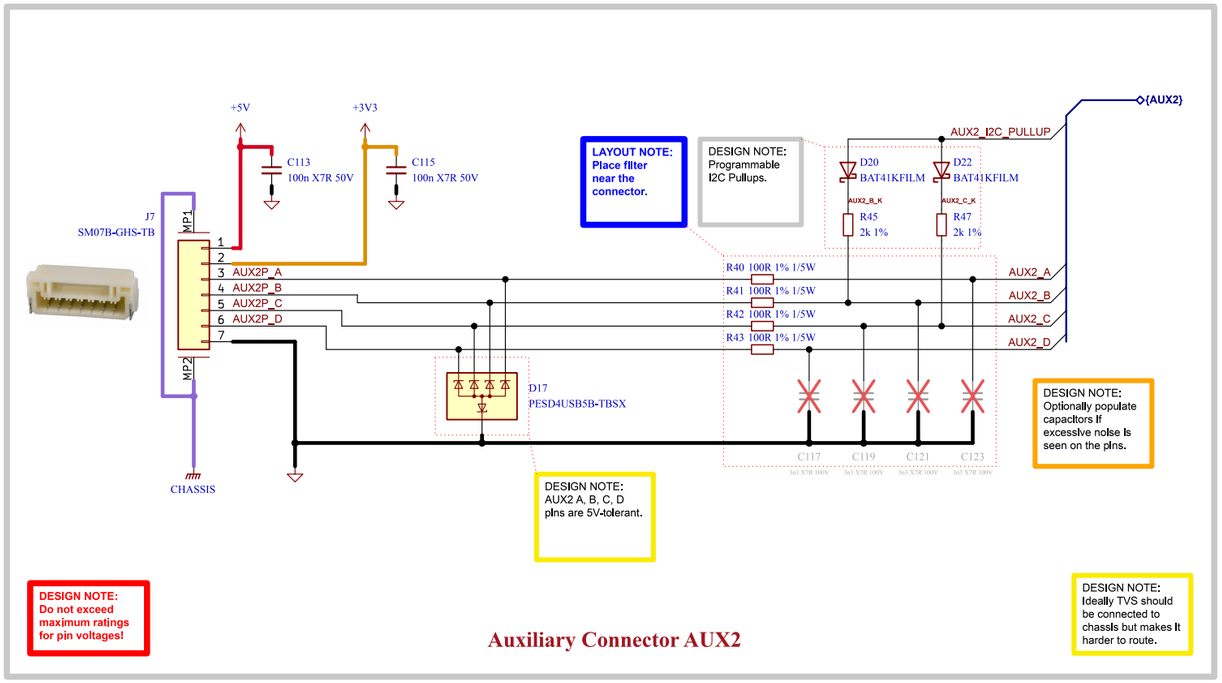

Auxiliary Connector AUX2

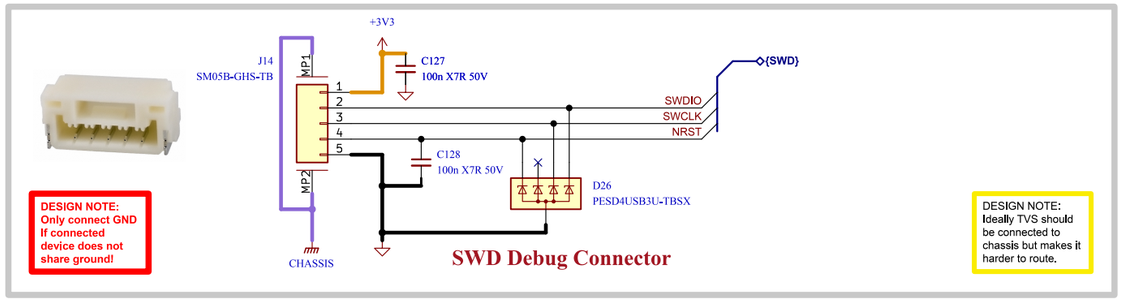

SWD Debug Connector

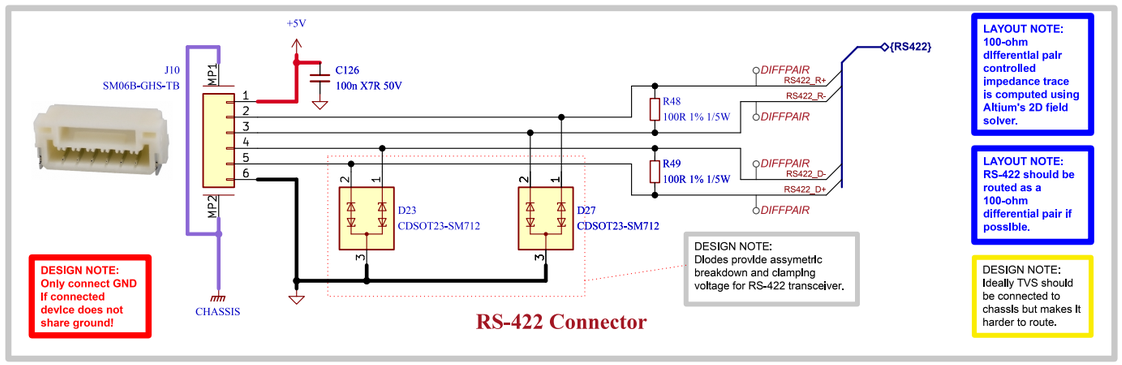

RS-422 Connector

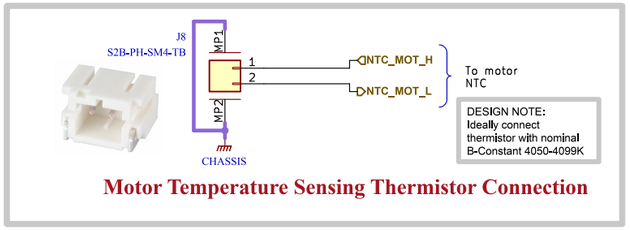

Motor Temperature Sensing Thermistor Connection

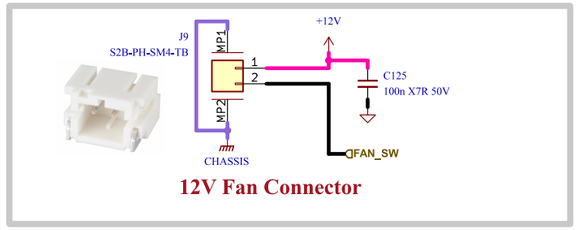

12V Fan Connector

Comments: Reference: Flexible I/O worked examples	Company: EPFL Xplore Research		Variant: RELEASED	Git Hash: 38f2a13
	Board Name: Amulet Motion Controller		Project Name: Chienpanzé	
Sheet Title: Interface - Interconnects	File Name: Interface - Interconnects.kicad_sch	Designer: Vincent Nguyen	Date: 2023-12-31	Revision: 1.2
Sheet Path: /Project Architecture/Interface - Interconnects/		Reviewer:	Size: A3	Sheet: 18 of 21

[19] Misc - Holes, Fiducials

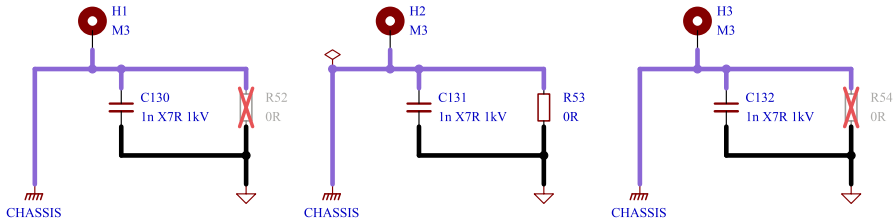

DESIGN NOTE:
Optional RC filter for chassis grounding. Capacitors offer multi-point low-impedance connections at high-frequencies.

DESIGN NOTE:
0-Ohm resistor provides low-impedance bond between chassis and signal GND. Be aware of ground loops through cable shield.

Mounting Holes and Chassis Connection

Fiducial Markers

Comments:	Company: EPFL Xplore Research		Variant: RELEASED	Git Hash: 38f2a13
	Board Name: Amulet Motion Controller		Project Name: Chienpanzé	
Sheet Title: Misc - Holes, Fiducials	File Name: Misc - Holes Fiducials.kicad_sch	Designer: Vincent Nguyen	Date: 2023-10-22	Revision: 1.2
Sheet Path: /Project Architecture/Misc - Holes, Fiducials/		Reviewer:	Size: A4	Sheet: 19 of 21

[20] Power - Sequencing

NAME	SOURCE	LEVEL
+VBAT	BATTERY	12 - 44V
+12V	LMR36006	12V ± 1.5%
+5V	LMR36506	5V ± 1.5%
+3V3	TPS62172	3.3V ± 3%
+A3V3	LP2992	3.3V ± 0.5%

DESIGN NOTE:
Power sequencing graph measured experimentally.

DESIGN NOTE:
Start-up time of 12V rail depends on +VBAT charging time, which itself depends on the precharge circuit.

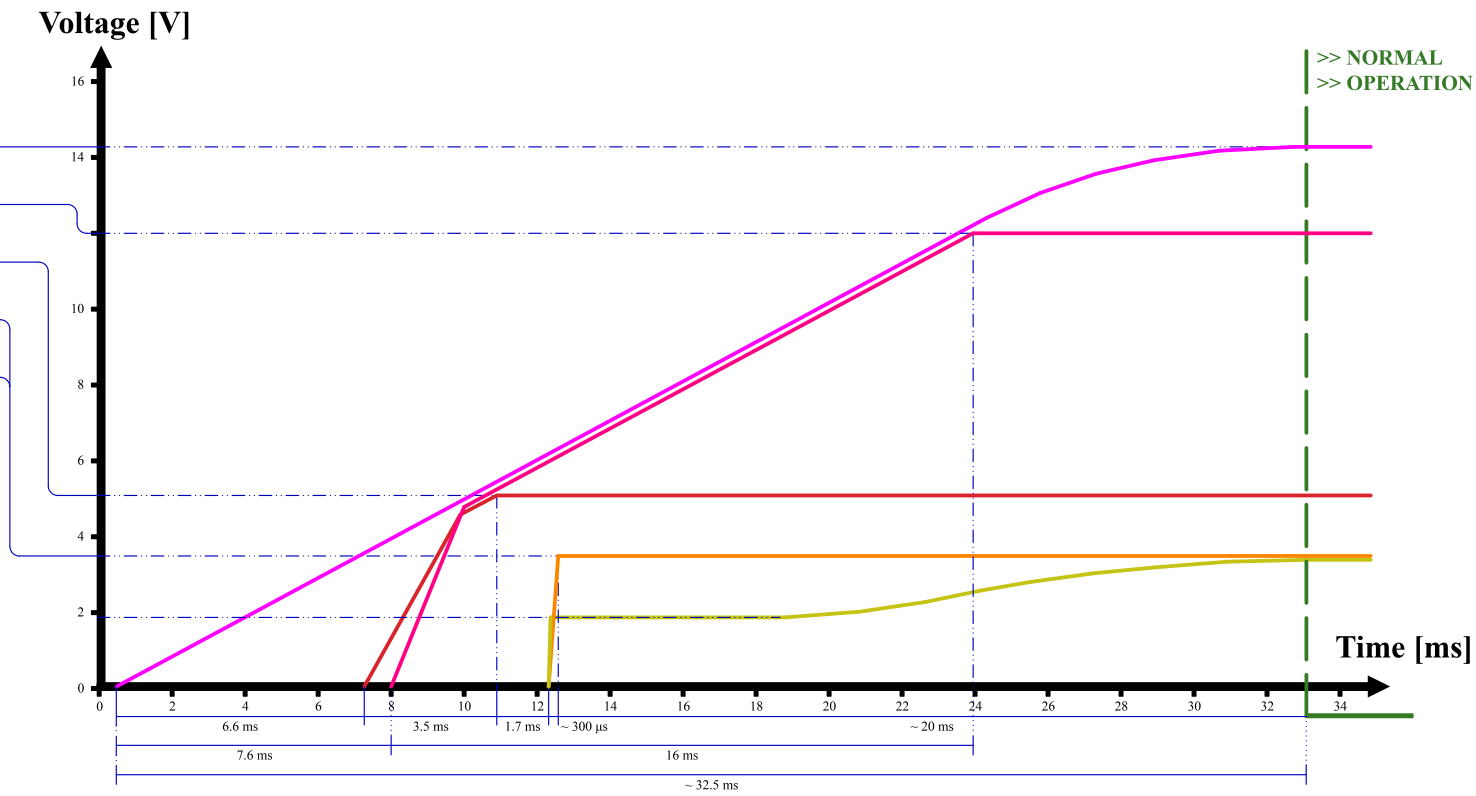

Comments:	Company: EPFL Xplore Research		Variant: RELEASED	Git Hash: 38f2a13
	Board Name: Amulet Motion Controller		Project Name: Chienpanzé	
Sheet Title: Power - Sequencing	File Name: Power - Sequencing.kicad_sch	Designer: Vincent Nguyen	Date: 2024-03-12	Revision: 1.2
Sheet Path: /Power - Sequencing/		Reviewer:	Size: A4	Sheet: 20 of 21

[21] Revision History

12-DEC-2023 - Initial Release
Variant: v1.0 Preliminary

- Changed CPH-CPL capacitor to 47nF (gate driver).
- Changed FD-CAN transceiver IC.
- Changed FETs for top cooled variant.
- Added TVS protection and termination switch to FD-CAN.
- Added low-side switched 12V 600mA source for external fan.
- Added LDO for analog supply.
- Changed input power TVS diode to bidirectional and added one diode per connector.
- Moved SOx low-pass filter to MCU section. Should be placed near MCU to avoid noise coupling into ADC lines.
- Added second onboard I2C magnetic encoder for disambiguation.
- Switched PWM_PHASEA with PWM_PHASEC on STM32G474 pinout for easier routing.
- Changed RS422 pinout on connector.
- Added ESD protection to all interfaces.
- Added overvoltage protection on thermistor ADC inputs.
- Changed buck regulators to optimize for low noise.
- Added Pi filters to inputs of buck regulators and MCU analog supply.
- Added decoupling caps next to power pins of connectors.

25-JAN-2024 - First Revision
Variant: v1.0 Checked

- Added controller target specifications.
- Replaced 5V 300mA buck converter with 600mA version.
- Added credits to moteus on cover page.
- Added optional RC-Snubber to power stage.
- Increased chassis length to go around the board.
- CAN and power TVS diodes now go to chassis.
- Changed clearance between nets to respect IEC60664-1 where possible.
- Rectified comment on precharge.
- Changed power TVS diode reference designator from "U" to "D".
- Replaced chassis-GND capacitor by 1nF 1kV.

12-MAR-2024 - First Revision
Variant: v1.0 Released

- Modified power sequencing graph according to experimental data.

13-APR-2024 - Second Revision
Variant: v1.1 Released

- Added RC snubber passive values.
- Added more vias for VBUS and LMR36006 GND pads.
- Changed board version voltage reference from +3V3 to +A3V3.
- Changed motor thermistor resistor divider to 2kOhm for a 10k 3950K thermistor.

Comments:	Company: EPFL Xplore Research		Variant: RELEASED	Git Hash: 38f2a13
	Board Name: Amulet Motion Controller		Project Name: Chienpanzé	
Sheet Title: Revision History	File Name: Revision History.kicad_sch	Designer: Vincent Nguyen	Date: 2024-01-03	Revision: 1.2
Sheet Path: /Revision History/		Reviewer:	Size: A4	Sheet: 21 of 21