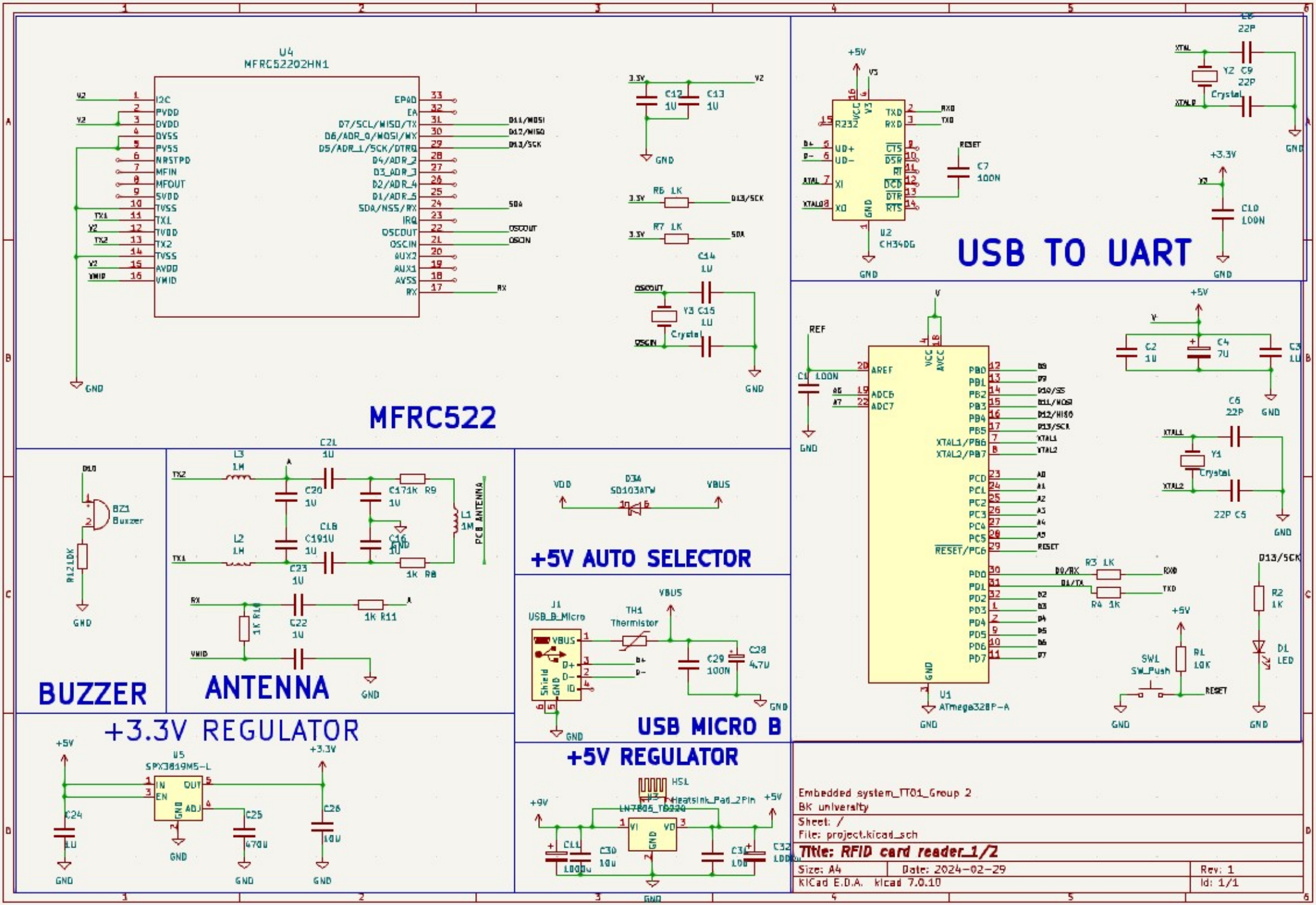
MFRC522
U4
MFRC52202HN1
USB TO UART
U2
CH340G
BUZZER
BZ1
Buzzer
ANTENNA
PCB ANTENNA
+5V AUTO SELECTOR
D3A
SD103ATW
USB MICRO B
J1
USB_B_Micro
TH1
Thermistor
+3.3V REGULATOR
U5
SPX3819M5-L
+5V REGULATOR
HS1
Heatsink_Pad_2Pin
U1
ATmega328P-A
SW1
SW_Push
Embedded system_IT01_Group 2
BK university
Sheet: /
File: project.kicad_sch
Title: RFID card reader_1/2
Size: A4
Date: 2024-02-29
Rev: 1
KiCad E.D.A. kicad 7.0.10
Id: 1/1

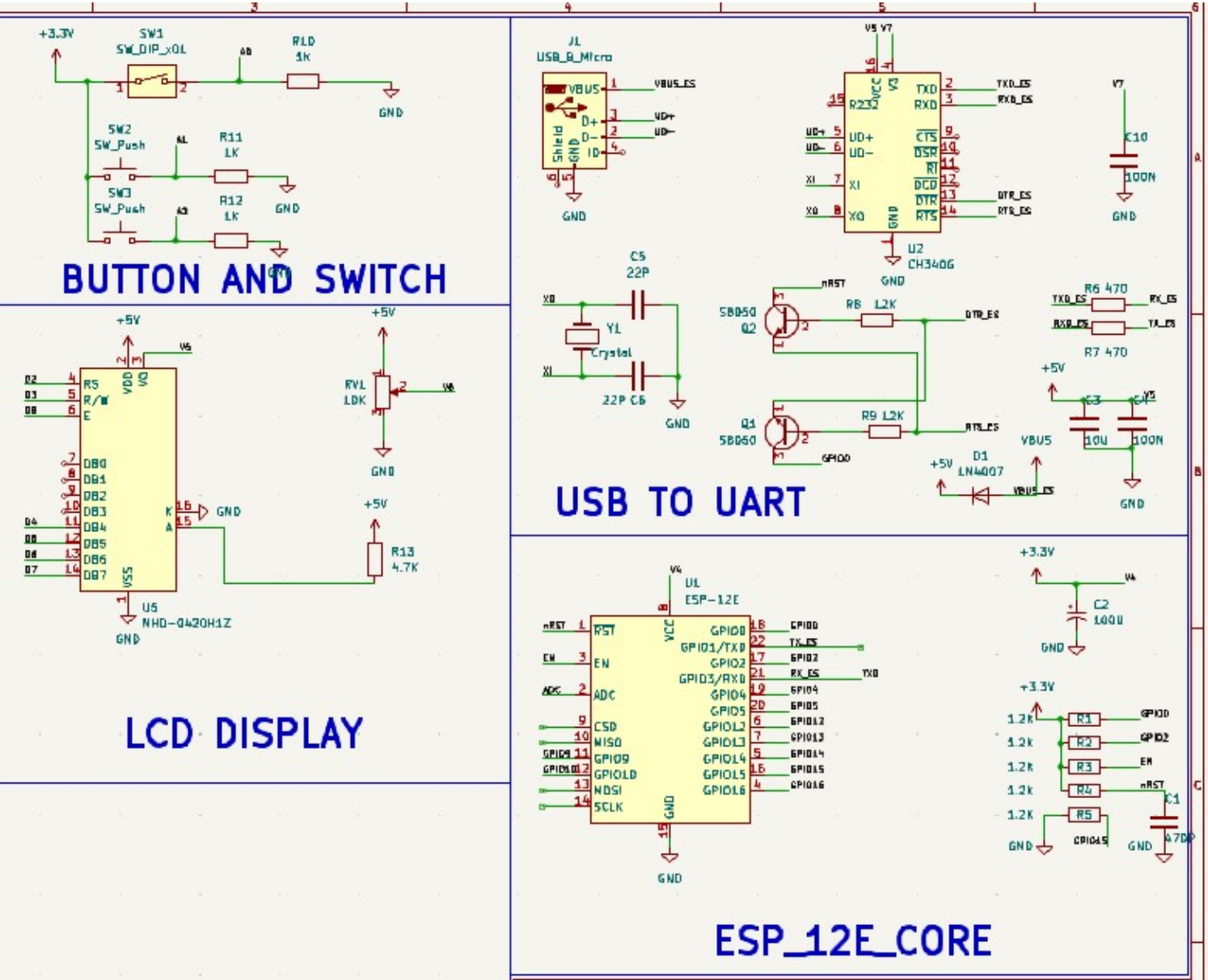

Embedded system_IT01_Group 2
BK university

Sheet: /
File: project.kicad_sch

Title: RFID card reader_2/2

Size: A4	Date: 2024-02-29	Rev: 1
KiCad E.D.A. kicad 7.0.10		Id: 1/1